TCN75A

2-Wire Serial Temperature Sensor

Features:

- Temperature-to-Digital Converter
- Accuracy:
  - ±1 (typical) from -40°C to +125°C
  - ±2°C (maximum) from -40°C to +125°C
- User-selectable Resolution: 0.5°C to 0.0625°C
- Operating Voltage Range: 2.7V to 5.5V
- 2-wire Interface: I²C™ Compatible
- Operating Current: 200 µA (typical)
- Shutdown Current: 2 µA (maximum)
- Power-saving One-shot Temperature Measurement
- Available Packages: MSOP-8, SOIC-8

Typical Applications:

- Personal Computers and Servers
- Hard Disk Drives and Other PC Peripherals
- Entertainment Systems
- Office Equipment
- Data Communication Equipment
- General Purpose Temperature Monitoring

Typical Application

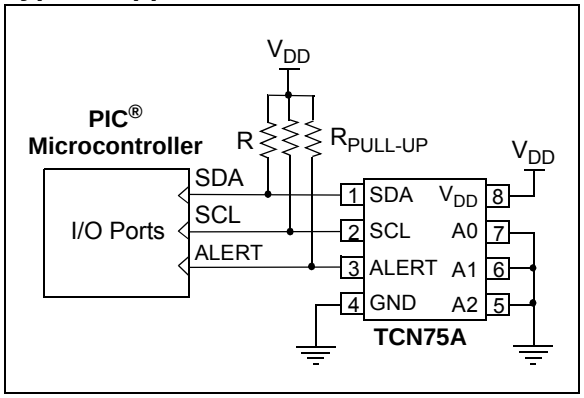

Description:

Microchip Technology Inc.'s TCN75A digital temperature sensor converts temperatures between -40°C and +125°C to a digital word, with ±1°C (typical) accuracy.

The TCN75A product comes with user-programmable registers that provide flexibility for temperature-sensing applications. The register settings allow user-selectable, 0.5°C to 0.0625°C temperature measurement resolution, configuration of the power-saving Shutdown and One-shot (single conversion on command while in Shutdown) modes and the specification of both temperature alert output and hysteresis limits. When the temperature changes beyond the specified limits, the TCN75A outputs an alert signal. The user has the option of setting the alert output signal polarity as an active-low or active-high comparator output for thermostat operation, or as temperature event interrupt output for microprocessor-based systems.

This sensor has an industry standard 2-wire, I²C™ compatible serial interface, allowing up to eight devices to be controlled in a single serial bus. These features make the TCN75A ideal for low-cost, sophisticated multi-zone temperature-monitoring applications.

Package Types

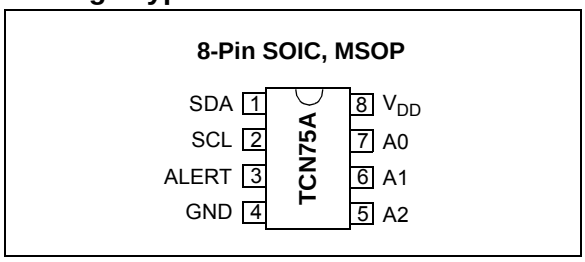

© 2010 Microchip Technology Inc.

NOTES:

© 2010 Microchip Technology Inc.

1.0 ELECTRICAL CHARACTERISTICS

Absolute Maximum Ratings †

V_{DD}..... 6.0V

Voltage at all Input/Output pins .....GND – 0.3V to 5.5V

Storage temperature .....-65°C to +150°C

Ambient temp. with power applied .....-55°C to +125°C

Junction Temperature (T_J) ..... 150°C

ESD protection on all pins (HBM:MM) .....(4 kV:400V)

Latch-up current at each pin ..... ±200 mA

†Notice: Stresses above those listed under "Maximum ratings" may cause permanent damage to the device. This is a stress rating only and functional operation of the device at those or any other conditions above those indicated in the operational listings of this specification is not implied. Exposure to maximum rating conditions for extended periods may affect device reliability.

DC CHARACTERISTICS

Electrical Specifications: Unless otherwise indicated, V_{DD} = 2.7V to 5.5V, GND = Ground, and T_A = -40°C to +125°C.

Parameters	Sym	Min	Typ	Max	Unit	Conditions
Power Supply						
Operating Voltage Range	V_{DD}	2.7	—	5.5	V	
Operating Current	I_{DD}	—	200	500	µA	Continuous operation
Shutdown Current	I_{SHDN}	—	0.1	2	µA	Shutdown mode
Power-on Reset (POR) Threshold	V_{POR}	—	1.7	—	V	V_{DD} falling edge
Line Regulation	$\Delta°C/\Delta V_{DD}$	—	0.2	—	°C/V	V_{DD} = 2.7V to 5.5V
Temperature Sensor Accuracy						
T_A = -40°C to +125°C	T_{ACY}	-2	±1	+2	°C	V_{DD} = 3.3V
Internal ΣΔ ADC						
Conversion Time:						
0.5°C Resolution	t_{CONV}	—	30	—	ms	33 samples/sec (typical)
0.25°C Resolution	t_{CONV}	—	60	—	ms	17 samples/sec (typical)
0.125°C Resolution	t_{CONV}	—	120	—	ms	8 samples/sec (typical)
0.0625°C Resolution	t_{CONV}	—	240	—	ms	4 samples/sec (typical)
Alert Output (Open-drain)						
High-level Current	I_{OH}	—	—	1	µA	V_{OH} = 5V
Low-level Voltage	V_{OL}	—	—	0.4	V	I_{OL}= 3 mA
Thermal Response						
Response Time	t_{RES}	—	1.4	—	s	Time to 63% (89°C) 27°C (air) to 125°C (oil bath)

© 2010 Microchip Technology Inc.

DIGITAL INPUT/OUTPUT PIN CHARACTERISTICS

Electrical Specifications: Unless otherwise indicated, V_{DD} = 2.7V to 5.5V, GND = Ground and T_A = -40°C to +125°C.

Parameters	Sym	Min	Typ	Max	Units	Conditions
Serial Input/Output (SCL, SDA, A0, A1, A2)						
Input						
High-level Voltage	V_{IH}	0.7 V_{DD}	—	—	V	
Low-level Voltage	V_{IL}	—	—	0.3 V_{DD}	V	
Input Current	I_{IN}	-1	—	+1	µA	
Output (SDA)						
Low-level Voltage	V_{OL}	—	—	0.4	V	I_{OL}= 3 mA
High-level Current	I_{OH}	—	—	1	µA	V_{OH} = 5V
Low-level Current	I_{OL}	6	—	—	mA	V_{OL} = 0.6V
Capacitance	C_{IN}	—	10	—	pF	
SDA and SCL Inputs						
Hysteresis	V_{HYST}	0.05 V_{DD}	—	—	V	

Graphical Symbol Description

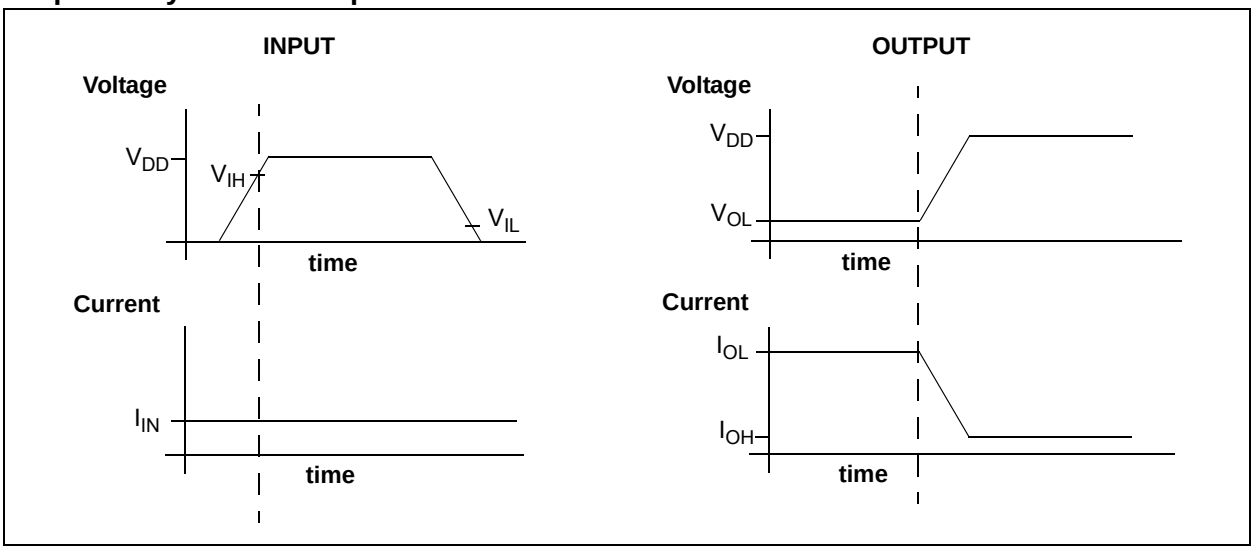

TEMPERATURE CHARACTERISTICS

Electrical Specifications: Unless otherwise indicated, V_{DD} = +2.7V to +5.5V and GND = Ground.

Parameters	Sym	Min	Typ	Max	Units	Conditions
Temperature Ranges						
Specified Temperature Range	T_A	-40	—	+125	°C	**Note 1**
Operating Temperature Range	T_A	-40	—	+125	°C	
Storage Temperature Range	T_A	-65	—	+150	°C	
Thermal Package Resistances						
Thermal Resistance, 8L-SOIC	θ_{JA}	—	163	—	°C/W	
Thermal Resistance, 8L-MSOP	θ_{JA}	—	206	—	°C/W	

Note 1: Operation in this range must not cause T_J to exceed Maximum Junction Temperature (+150°C).

© 2010 Microchip Technology Inc.

SERIAL INTERFACE TIMING SPECIFICATIONS (Note 1)

Electrical Specifications: Unless otherwise indicated, V_{DD} = 2.7V to 5.5V, GND = Ground, T_A = -40°C to +125°C, C_L = 80 pF and all limits measured to 50% point.

Parameters	Sym	Min	Typ	Max	Units	Conditions
2-Wire I²C™ Compatible Interface						
Serial Port Frequency	f_{SC}	0	—	400	kHz	
Clock Period	t_{SC}	2.5	—	—	µs	
Low Clock	t_{LOW}	1.3	—	—	µs	
High Clock	t_{HIGH}	0.6	—	—	µs	
Rise Time	t_R	20	—	300	ns	10% to 90% of V_{DD} (SCL, SDA)
Fall Time	t_F	20	—	300	ns	90% to 10% of V_{DD} (SCL, SDA)
Data Setup Before SCL High	$t_{SU-DATA}$	0.1	—	—	µs	
Data Hold After SCL Low	t_{H-DATA}	0	—	—	µs	
Start Condition Setup Time	$t_{SU-START}$	0.6	—	—	µs	
Start Condition Hold Time	$t_{H-START}$	0.6	—	—	µs	
Stop Condition Setup Time	$t_{SU-STOP}$	0.6	—	—	µs	
Bus Idle	t_{B-FREE}	1.3	—	—	µs	

Note 1: Specification limits are characterized but not product tested.

Timing Diagram

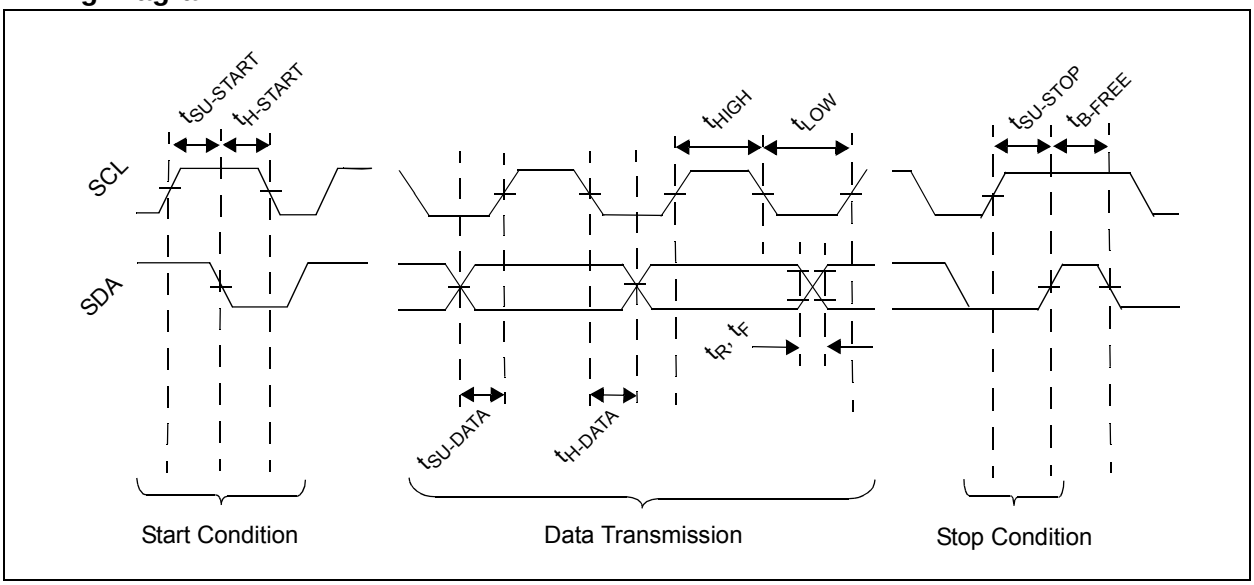

NOTES:

© 2010 Microchip Technology Inc.

2.0 TYPICAL PERFORMANCE CURVES

Note: The graphs and tables provided following this note are a statistical summary based on a limited number of samples and are provided for informational purposes only. The performance characteristics listed herein are not tested or guaranteed. In some graphs or tables, the data presented may be outside the specified operating range (e.g., outside specified power supply range) and therefore outside the warranted range.

Note: Unless otherwise noted: V_{DD} = 2.7V to 5.5V.

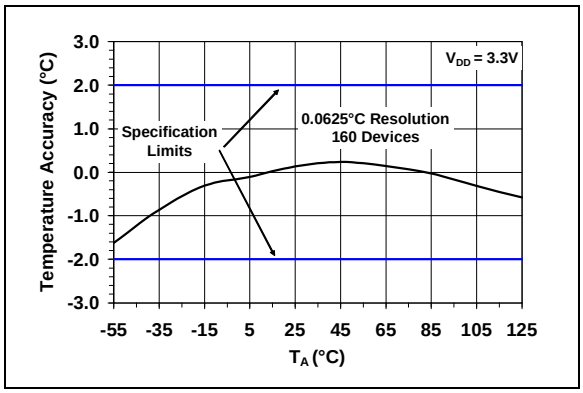

FIGURE 2-1: *Average Temperature Accuracy vs. Ambient Temperature, V_{DD} = 3.3V.*

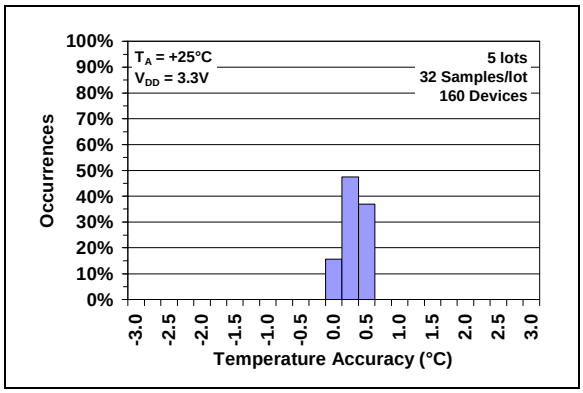

FIGURE 2-4: *Temperature Accuracy Histogram, T_A = +25°C.*

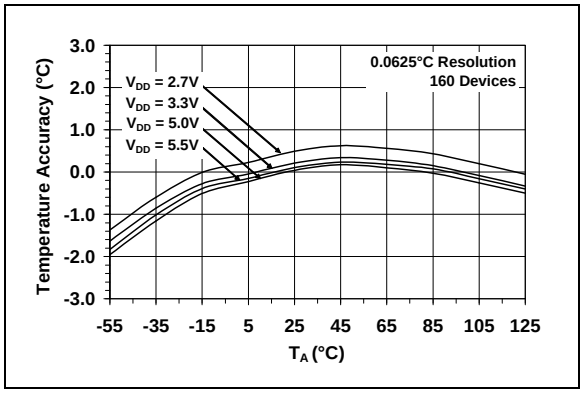

FIGURE 2-2: *Average Temperature Accuracy vs. Ambient Temperature.*

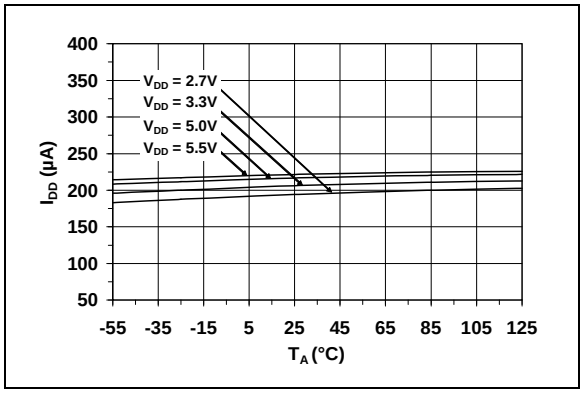

FIGURE 2-5: *Supply Current vs. Ambient Temperature.*

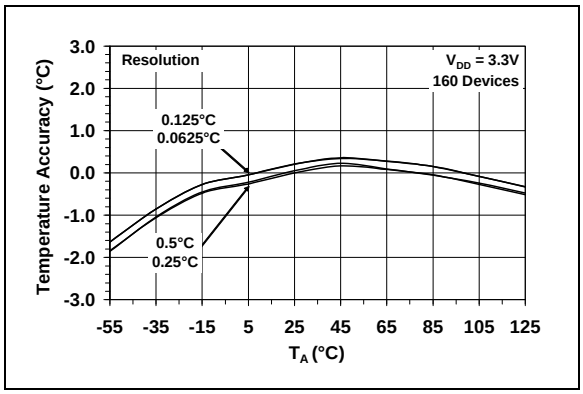

FIGURE 2-3: *Average Temperature Accuracy vs. Ambient Temperature, V_{DD} = 3.3V.*

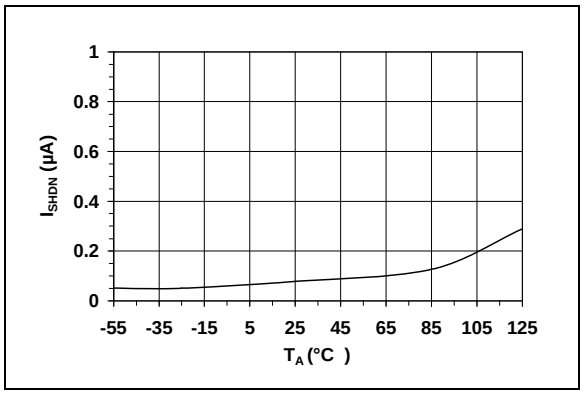

FIGURE 2-6: *Shutdown Current vs. Ambient Temperature.*

Note: Unless otherwise noted: V_{DD} = 2.7V to 5.5V.

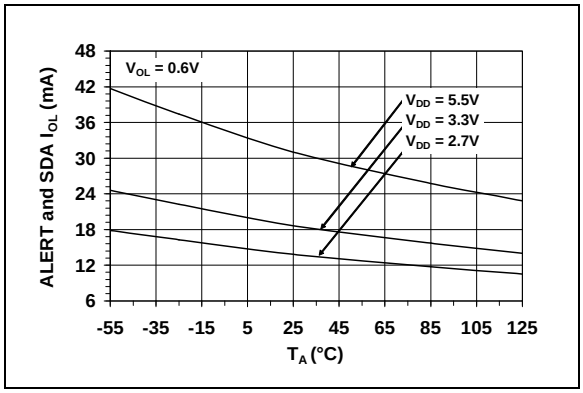

FIGURE 2-7: *ALERT and SDA I_{OL} vs. Ambient Temperature.*

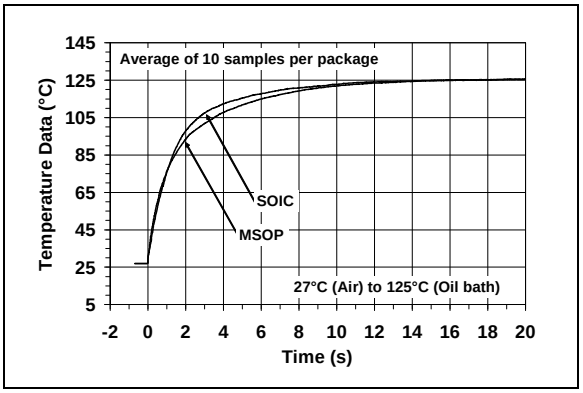

FIGURE 2-9: *TCN75A Thermal Response vs. Time.*

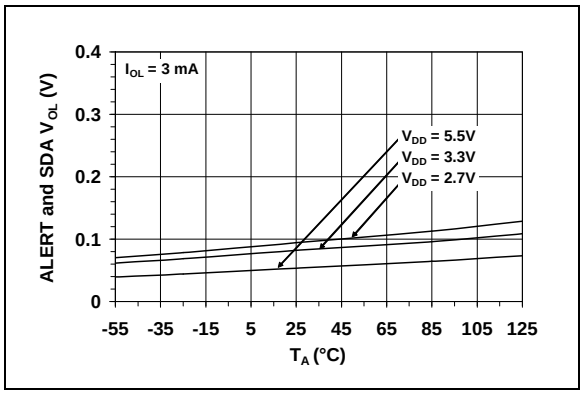

FIGURE 2-8: *ALERT and SDA Output V_{OL} vs. Ambient Temperature.*

© 2010 Microchip Technology Inc.

3.0 PIN DESCRIPTION

The descriptions of the pins are listed in Table 3-1.

TABLE 3-1: PIN FUNCTION TABLE

MSOP, SOIC	Symbol	Function
1	SDA	Bidirectional Serial Data
2	SCL	Serial Clock Input
3	ALERT	Temperature Alert Output
4	GND	Ground
5	A2	Address Select Pin (bit 2)
6	A1	Address Select Pin (bit 1)
7	A0	Address Select Pin (bit 0)
8	V_{DD}	Power Supply Input

3.1 Serial Data Pin (SDA)

SDA is a bidirectional input/output pin, used to serially transmit data to and from the host controller. This pin requires a pull-up resistor to output data.

3.2 Serial Clock Pin (SCL)

SCL is a clock input pin. All communication and timing is relative to the signal on this pin. The clock is generated by the host controller on the bus.

3.3 Power Supply Input (V_{DD})

V_{DD} is the power pin. The operating voltage, as specified in the DC electrical specification table, is applied on this pin.

3.4 Ground (GND)

GND is the system ground pin.

3.5 ALERT Output

The TCN75A's ALERT pin is an open-drain output. The device outputs an alert signal when the ambient temperature goes beyond the user-programmed temperature limit.

3.6 Address Pins (A2, A1, A0)

A2, A1 and A0 are device or slave address input pins.

The address pins are the Least Significant bits (LSb) of the device address bits. The Most Significant bits (MSb) (A6, A5, A4, A3) are factory-set to <1001>. This is illustrated in Table 3-2.

TABLE 3-2: SLAVE ADDRESS

Device	A6	A5	A4	A3	A2	A1	A0
TCN75A	1	0	0	1	X	X	X

Note: User-selectable address is shown by X.

NOTES:

© 2010 Microchip Technology Inc.

4.0 SERIAL COMMUNICATION

4.1 2-Wire SMBus/Standard Mode I²C™ Protocol-Compatible Interface

The TCN75A serial clock input (SCL) and the bidirectional serial data line (SDA) form a 2-wire bidirectional SMBus/Standard mode I²C compatible communication port (refer to the **Digital Input/output Pin Characteristics Table** and **Serial Interface Timing Specifications (Note 1) Table**).

The following bus protocol has been defined:

TABLE 4-1: TCN75A SERIAL BUS PROTOCOL DESCRIPTIONS

Term	Description
Master	The device that controls the serial bus, typically a microcontroller.
Slave	The device addressed by the master, such as the TCN75A.
Transmitter	Device sending data to the bus.
Receiver	Device receiving data from the bus.
Start	A unique signal from master to initiate serial interface with a slave.
Stop	A unique signal from the master to terminate serial interface from a slave.
Read/Write	A read or write to the TCN75A registers.
ACK	A receiver Acknowledges (ACK) the reception of each byte by polling the bus.
NAK	A receiver Not-Acknowledges (NAK) or releases the bus to show End-of-Data (EOD).
Busy	Communication is not possible because the bus is in use.
Not Busy	The bus is in the Idle state, both SDA and SCL remain high.
Data Valid	SDA must remain stable before SCL becomes high in order for a data bit to be considered valid. During normal data transfers, SDA only changes state while SCL is low.

4.1.1 DATA TRANSFER

Data transfers are initiated by a Start condition (Start), followed by a 7-bit device address and a read/write bit. An Acknowledge (ACK) from the slave confirms the reception of each byte. Each access must be terminated by a Stop condition (Stop).

Repeated communication is initiated after $t_{B\text{-}FREE}$.

This device does not support sequential register read/write. Each register needs to be addressed using the Register Pointer.

This device supports the Receive Protocol. The register can be specified using the pointer for the initial read. Each repeated read or receive begins with a Start condition and address byte. The TCN75A retains the previously selected register. Therefore, it outputs data from the previously specified register (repeated pointer specification is not necessary).

4.1.2 MASTER/SLAVE

The bus is controlled by a master device (typically a microcontroller) that controls the bus access and generates the Start and Stop conditions. The TCN75A is a slave device and does not control other devices in the bus. Both master and slave devices can operate as either transmitter or receiver. However, the master device determines which mode is activated.

4.1.3 START/STOP CONDITION

A high-to-low transition of the SDA line (while SCL is high) is the Start condition. All data transfers must be preceded by a Start condition from the master. If a Start condition is generated during data transfer, the TCN75A resets and accepts the new Start condition.

A low-to-high transition of the SDA line (while SCL is high) signifies a Stop condition. If a Stop condition is introduced during data transmission, the TCN75A releases the bus. All data transfers are ended by a Stop condition from the master.

4.1.4 ADDRESS BYTE

Following the Start condition, the host must transmit an 8-bit address byte to the TCN75A. The address for the TCN75A Temperature Sensor is '1001,A2,A1,A0' in binary, where the A2, A1 and A0 bits are set externally by connecting the corresponding pins to V_{DD} '1' or GND '0'. The 7-bit address transmitted in the serial bit stream must match the selected address for the TCN75A to respond with an ACK. Bit 8 in the address byte is a read/write bit. Setting this bit to '1' commands a read operation, while '0' commands a write operation (see Figure 4-1).

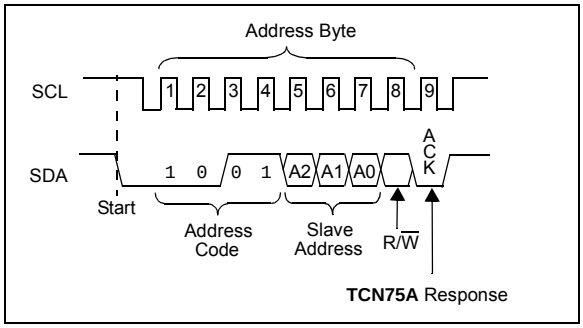

FIGURE 4-1: *Device Addressing.*

4.1.5 DATA VALID

After the Start condition, each bit of data in transmission needs to be settled for a time specified by $t_{SU-DATA}$ before SCL toggles from low-to-high (see **"Serial Interface Timing Specifications (Note 1)"**.

4.1.6 ACKNOWLEDGE (ACK)

Each receiving device, when addressed, is obliged to generate an ACK bit after the reception of each byte. The master device must generate an extra clock pulse for ACK to be recognized.

The acknowledging device pulls down the SDA line for $t_{SU-DATA}$ before the low-to-high transition of SCL from the master. SDA also needs to remain pulled down for t_{H-DATA} after a high-to-low transition of SCL.

During read, the master must signal an End-of-Data (EOD) to the slave by not generating an ACK bit (NAK) once the last bit has been clocked out of the slave. In this case, the slave will leave the data line released to enable the master to generate the Stop condition.

© 2010 Microchip Technology Inc.

5.0 FUNCTIONAL DESCRIPTION

The TCN75A temperature sensor consists of a band-gap type temperature sensor, a ΣΔ Analog-to-Digital Converter (ADC), user-programmable registers and a 2-wire I^2C protocol-compatible serial interface.

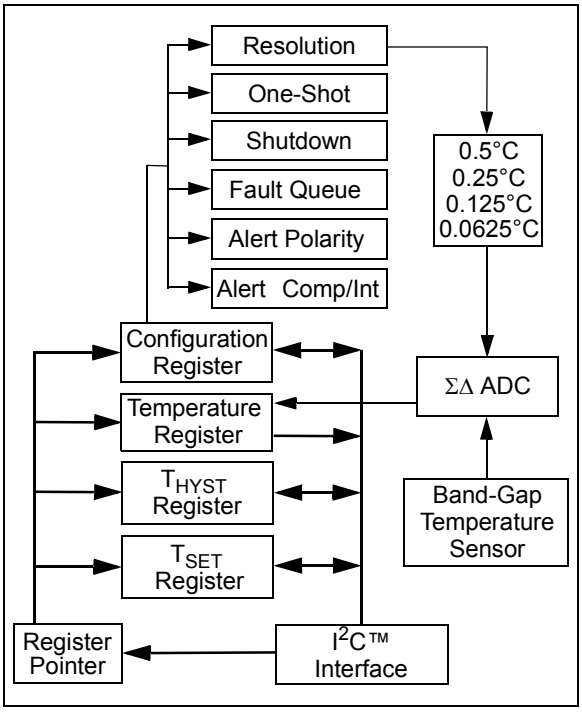

FIGURE 5-1: *Functional Block Diagram.*

5.1 Temperature Sensor

The TCN75A uses the difference in the base-emitter voltage of a transistor while its collector current is changed from IC_1 to IC_2. With this method, the ΔV_{BE} depends only on the ratio of the two currents and the ambient temperature, as shown in Equation 5-1.

EQUATION 5-1:

$$\Delta V_{BE} = \left(\frac{kT}{q}\right) \times ln(IC_1/IC_2)$$

Where:

T	=	temperature in kelvin
ΔV_{BE}	=	change in diode base-emitter voltage
k	=	Boltzmann's constant
q	=	electron charge
IC_1 and IC_2	=	currents with n:1 ratio

5.2 ΣΔ Analog-to-Digital Converter

A Sigma-Delta ADC is used to convert ΔV_{BE} to a digital word that corresponds to the transistor temperature. The converter has an adjustable resolution from 0.5°C (at 30 ms conversion time) to 0.0625°C (at 240 ms conversion time). Thus, it allows the user to make trade-offs between resolution and conversion time. Refer to **Section 5.3.2 "Sensor Configuration Register (CONFIG)"** and **Section 5.3.4.7 "ΣΔ ADC Resolution"** for details.

5.3 Registers

The TCN75A has four registers that are user-accessible. These registers are specified as the Ambient Temperature (T_A) register, the Temperature Limit-set (T_{SET}) register, the Temperature Hysteresis (T_{HYST}) register and device Configuration (CONFIG) register.

The Ambient Temperature register is a read-only register and is used to access the ambient temperature data. The data from the ADC is loaded in parallel in the register. The Temperature Limit-set and Temperature Hysteresis registers are read/write registers that provide user-programmable temperature limits. If the ambient temperature drifts beyond the programmed limits, the TCN75A outputs an alert signal using the ALERT pin (refer to **Section 5.3.4.3 "ALERT Output Configuration"**). The device Configuration register provides access for the user to configure the TCN75A's various features. These registers are described in further detail in the following sections.

The registers are accessed by sending Register Pointers to the TCN75A using the serial interface. This is an 8-bit pointer. However, the two Least Significant bits (LSbs) are used as pointers and all other bits need to be cleared <0>. This device has additional registers that are reserved for test and calibration. If these registers are accessed, the device may not perform according to the specification. The pointer description is shown below.

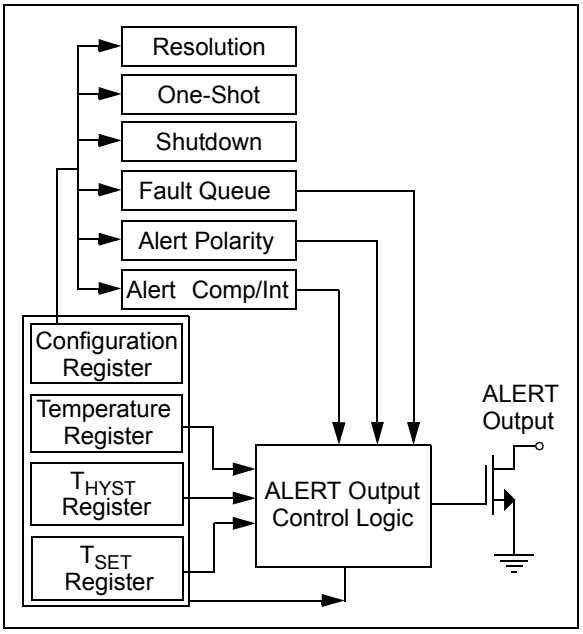

FIGURE 5-2: *Register Block Diagram.*

REGISTER 5-1: REGISTER POINTER

U-0	U-0	U-0	U-0	U-0	U-0	R/W-0	R/W-0
0	0	0	0	0	0	P1	P0
bit 7							bit 0

Legend:			
R = Readable bit	W = Writable bit	U = Unimplemented bit, read as '0'	
-n = Value at POR	'1' = Bit is set	'0' = Bit is cleared	x = Bit is unknown

bit 7-2 **Unimplemented:** Read as '0'

bit 1-0 **Pointer** bits

00 = Temperature register (T_A)
01 = Configuration register (CONFIG)
10 = Temperature Hysteresis register (T_{HYST})
11 = Temperature Limit-set register (T_{SET})

.

© 2010 Microchip Technology Inc.

TABLE 5-1: BIT ASSIGNMENT SUMMARY FOR ALL REGISTERS

Register Pointer P1 P0	MSB/ LSB	Bit Assignment							
		7	**6**	**5**	**4**	**3**	**2**	**1**	**0**
Ambient Temperature Register (T_A)									
0 0	MSB	Sign	2^6°C	2^5°C	2^4°C	2^3°C	2^2°C	2^1°C	2^0°C
	LSB	2^{-1}°C	2^{-2}°C	2^{-3}°C	2^{-4}°C	0	0	0	0
Sensor Configuration Register (CONFIG)									
0 1	LSB	One-Shot	Resolution		Fault Queue		ALERT Polarity	COMP/INT	Shutdown
Temperature Hysteresis Register (T_{HYST})									
1 0	MSB	Sign	2^6°C	2^5°C	2^4°C	2^3°C	2^2°C	2^1°C	2^0°C
	LSB	2^{-1}°C	0	0	0	0	0	0	0
Temperature Limit-Set Register (T_{SET})									
1 1	MSB	Sign	2^6°C	2^5°C	2^4°C	2^3°C	2^2°C	2^1°C	2^0°C
	LSB	2^{-1}°C	0	0	0	0	0	0	0

5.3.1 AMBIENT TEMPERATURE REGISTER (T_A)

The TCN75A has a 16-bit read-only Ambient Temperature register that contains 9-bit to 12-bit temperature data. (0.5°C to 0.0625°C resolutions, respectively). This data is formatted in two's complement. The bit assignments, as well as the corresponding resolution, is shown in the register assignment below.

The refresh rate of this register depends on the selected ADC resolution. It takes 30 ms (typical) for 9-bit data and 240 ms (typical) for 12-bit data. Since this register is double-buffered, the user can read the register while the TCN75A performs Analog-to-Digital conversion in the background. The decimal code to ambient temperature conversion is shown in Equation 5-2:

EQUATION 5-2:

$$T_A = \text{Code} \times 2^{-4}$$

Where:

T_A = Ambient Temperature (°C)
Code = TCN75A output in decimal

REGISTER 5-2: AMBIENT TEMPERATURE REGISTER (T_A) — ADDRESS <0000 0000>b

Upper Half:							
R-0	R-0	R-0	R-0	R-0	R-0	R-0	R-0
Sign	2^6 °C	2^5 °C	2^4 °C	2^3 °C	2^2 °C	2^1 °C	2^0 °C
bit 15							bit 8

Lower Half:							
R-0	R-0	R-0	R-0	R-0	R-0	R-0	R-0
2^{-1} °C/bit	2^{-2} °C	2^{-3} °C	2^{-4} °C	0	0	0	0
bit 7							bit 0

Legend:			
R = Readable bit	W = Writable bit	U = Unimplemented bit, read as '0'	
-n = Value at POR	'1' = Bit is set	'0' = Bit is cleared	x = Bit is unknown

Note 1: When the 0.5°C, 0.25°C or 0.125°C resolutions are selected, bit 6, bit 7 or bit 8 will remain clear <0>, respectively.

© 2010 Microchip Technology Inc.

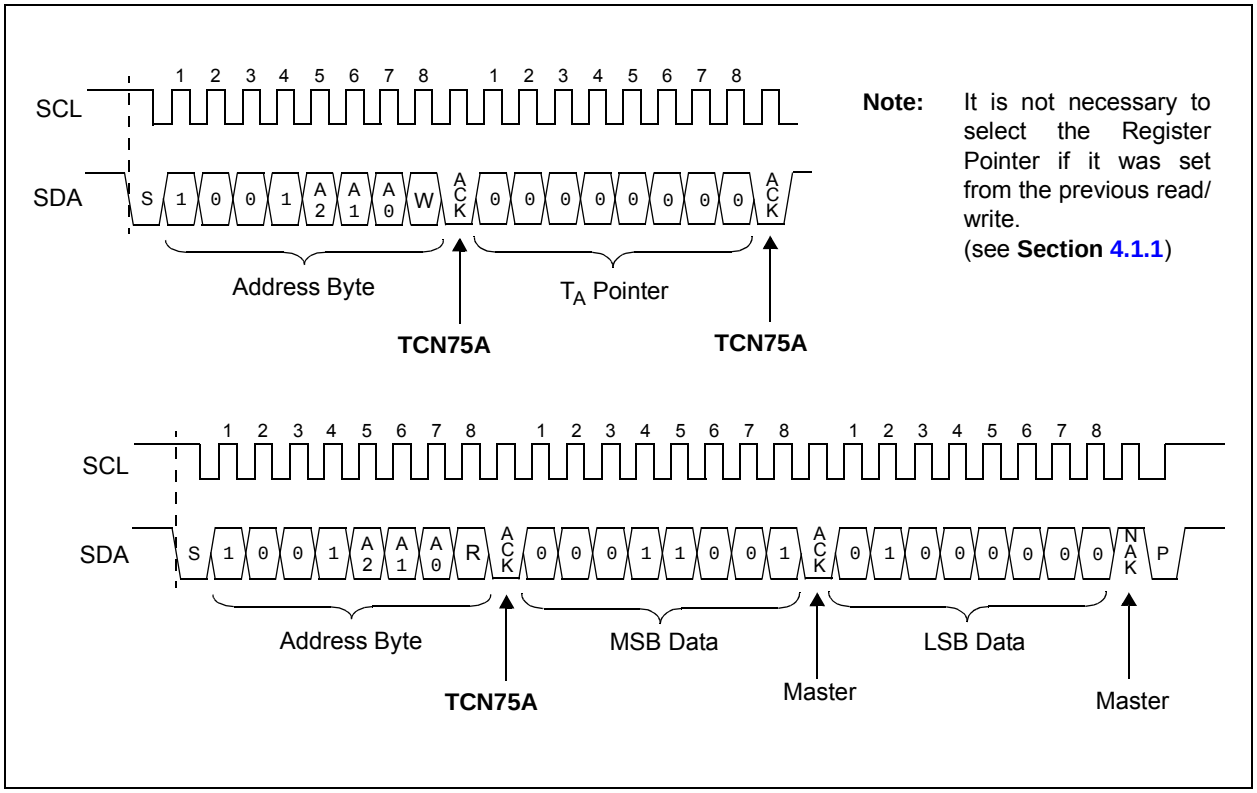

FIGURE 5-3: *Timing Diagram for Reading +25.25°C Temperature from the T_A Register (See **Section 4.0 "Serial Communication"**).*

5.3.2 SENSOR CONFIGURATION REGISTER (CONFIG)

The TCN75A has an 8-bit read/write Configuration register that allows the user to select the different features. These features include shutdown, ALERT output select as comparator or interrupt output, ALERT output polarity, fault queue cycle, temperature measurement resolution and One-shot mode (single conversion while in shutdown). These functions are described in detail in the following sections.

REGISTER 5-3: CONFIGURATION REGISTER (CONFIG) — ADDRESS <0000 0001>b

R/W-0	R/W-0	R/W-0	R/W-0	R/W-0	R/W-0	R/W-0	R/W-0
One-Shot	Resolution		Fault Queue		ALERT Polarity	COMP/INT	Shutdown
bit 7							bit 0

Legend:			
R = Readable bit	W = Writable bit	U = Unimplemented bit, read as '0'	
-n = Value at POR	'1' = Bit is set	'0' = Bit is cleared	x = Bit is unknown

bit 7 **ONE-SHOT** bit
- 1 = Enabled
- 0 = Disabled (Power-up default)

bit 6-5 ΣΔ **ADC RESOLUTION** bits
- 00 = 9 bit or 0.5°C (Power-up default)
- 01 = 10 bit or 0.25°C
- 10 = 11 bit or 0.125°C
- 11 = 12 bit or 0.0625°C

bit 4-3 **FAULT QUEUE** bits
- 00 = 1 (Power-up default)
- 01 = 2
- 10 = 4
- 11 = 6

bit 2 **ALERT POLARITY** bit
- 1 = Active-high
- 0 = Active-low (Power-up default)

bit 1 **COMP/INT** bit
- 1 = Interrupt mode
- 0 = Comparator mode (Power-up default)

bit 0 **SHUTDOWN** bit
- 1 = Enable
- 0 = Disable (Power-up default)

© 2010 Microchip Technology Inc.

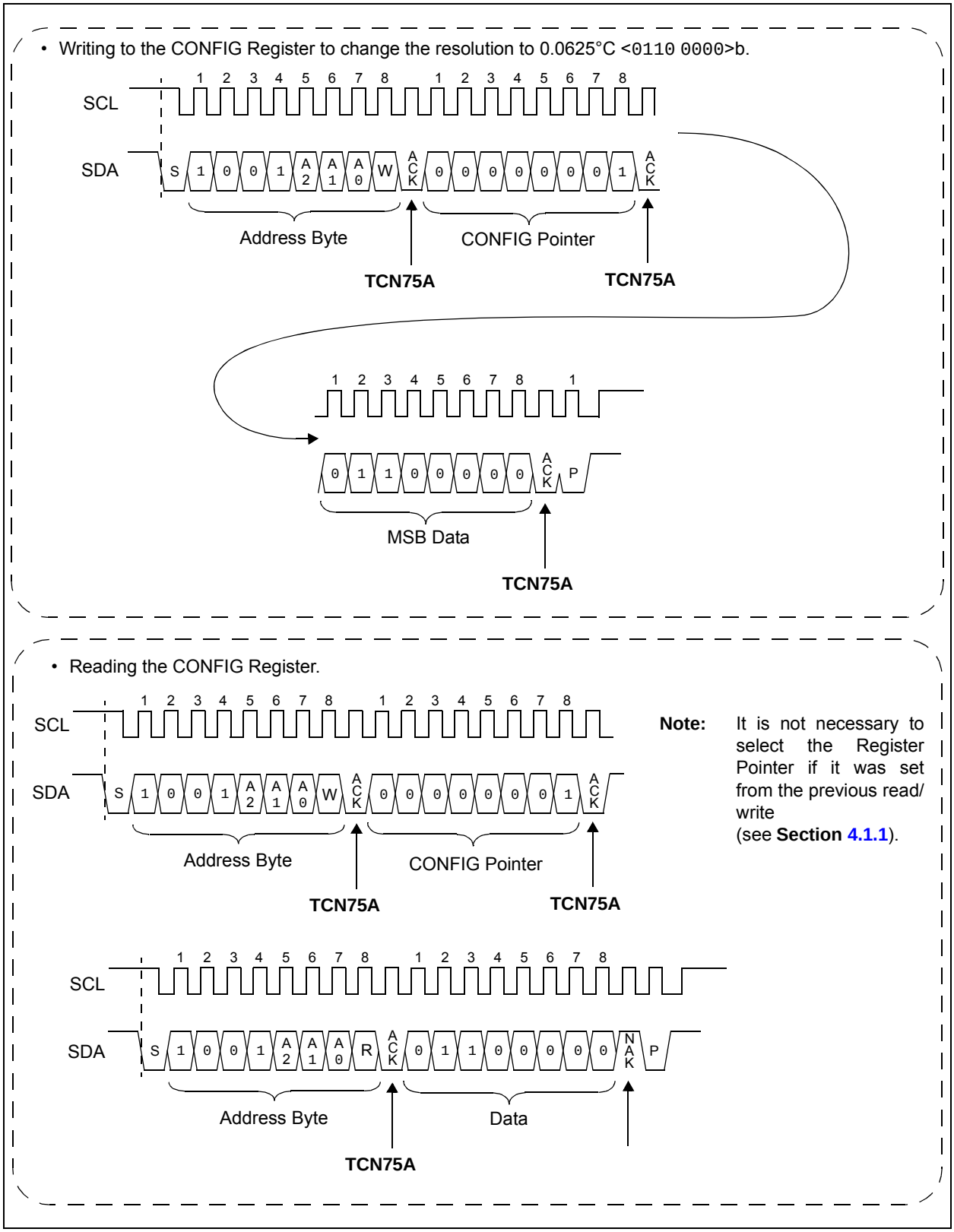

FIGURE 5-4: *Timing Diagram for Writing and Reading from the Configuration Register (See **Section 4.0 "Serial Communication"**).*

5.3.3 TEMPERATURE HYSTERESIS REGISTER (T_{HYST})

The TCN75A has a 16-bit read/write Temperature Hysteresis register that contains a 9-bit data in two's compliment format. This register is used to set a hysteresis for the T_{SET} limit. Therefore, the data represents a minimum temperature limit. If the ambient temperature drifts below the specified limit, the TCN75A asserts an alert output (refer to **Section 5.3.4.3 "ALERT Output Configuration"**).

This register uses the nine Most Significant bits (MSbs) and all other bits are "don't cares".

The power-up default value of T_{HYST} register is 75°C, or <0100 1011 0>b in binary.

REGISTER 5-4: TEMPERATURE HYSTERESIS REGISTER (T_{HYST}) — ADDRESS <0000 0010>b

Upper Half:							
R/W-0	R/W-1	R/W-0	R/W-0	R/W-1	R/W-0	R/W-1	R/W-1
Sign	2^6 °C	2^5 °C	2^4 °C	2^3 °C	2^2 °C	2^1 °C	2^0 °C
bit 15							bit 8

Lower Half:							
R/W-0	R-0	R-0	R-0	R-0	R-0	R-0	R-0
2^{-1} °C	0	0	0	0	0	0	0
bit 7							bit 0

Legend:			
R = Readable bit	W = Writable bit	U = Unimplemented bit, read as '0'	
-n = Value at POR	'1' = Bit is set	'0' = Bit is cleared	x = Bit is unknown

© 2010 Microchip Technology Inc.

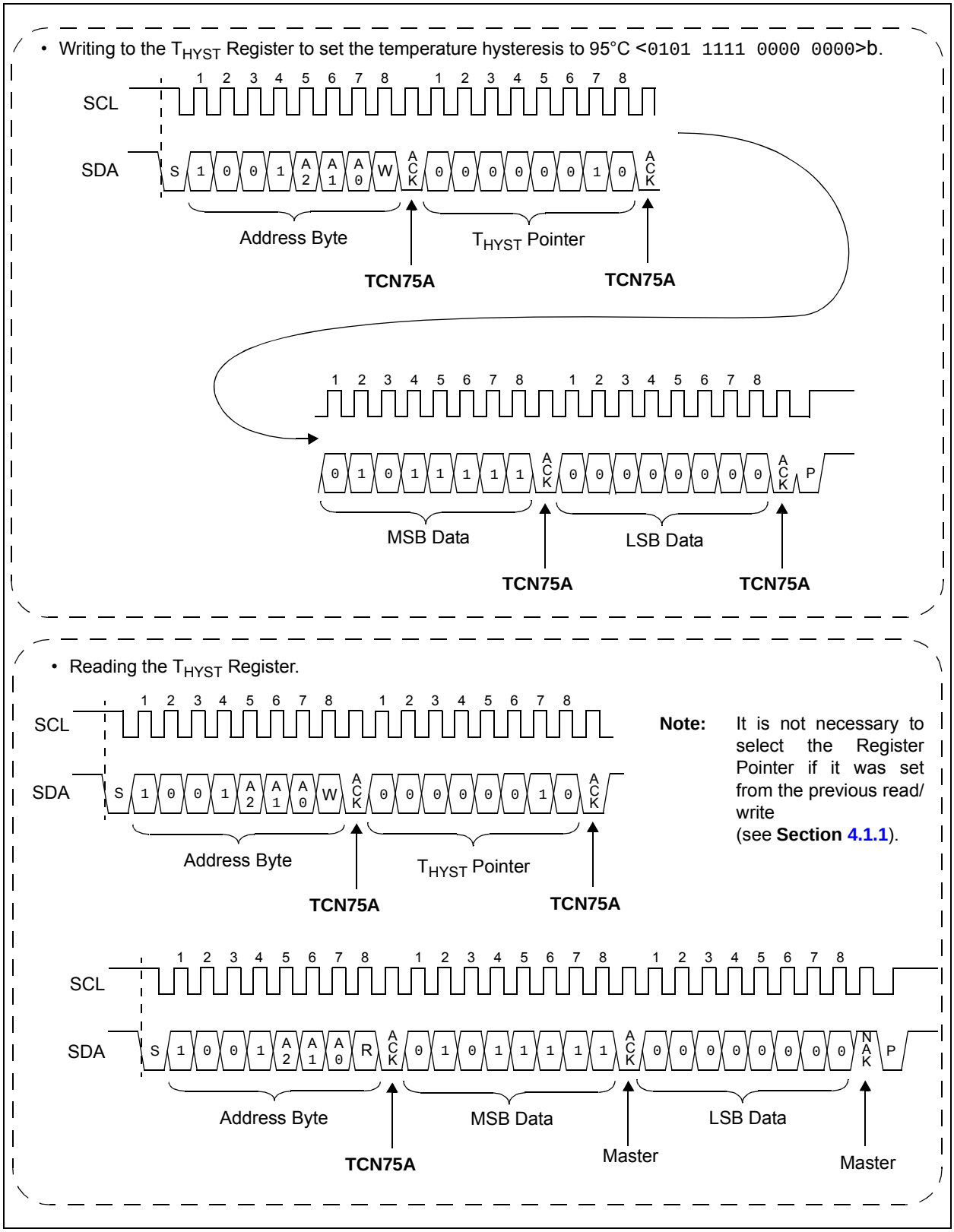

FIGURE 5-5: *Timing Diagram for Writing and Reading from the Temperature Hysteresis Register (See **Section 4.0 "Serial Communication"**).*

5.3.4 TEMPERATURE LIMIT-SET REGISTER (T_{SET})

The TCN75A has a 16-bit read/write Temperature Limit-Set register (T_{SET}) which contains a 9-bit data in two's compliment format. This data represents a maximum temperature limit. If the ambient temperature exceeds this specified limit, the TCN75A asserts an alert output. (Refer to **Section 5.3.4.3 "ALERT Output Configuration"**).

This register uses the nine Most Significant bits (MSbs) and all other bits are "don't cares".

The power-up default value of the T_{SET} register is 80°C, or <0101 0000 0>b in binary.

REGISTER 5-5: TEMPERATURE LIMIT-SET REGISTER (T_{SET}) — ADDRESS <0000 0011>b

Upper Half:							
R/W-0	R/W-1	R/W-0	R/W-1	R/W-0	R/W-0	R/W-0	R/W-0
Sign	2^6 °C	2^5 °C	2^4 °C	2^3 °C	2^2 °C	2^1 °C	2^0 °C
bit 15							bit 8

Lower Half:							
R/W-0	R-0	R-0	R-0	R-0	R-0	R-0	R-0
2^{-1} °C	0	0	0	0	0	0	0
bit 7							bit 0

Legend:			
R = Readable bit	W = Writable bit	U = Unimplemented bit, read as '0'	
-n = Value at POR	'1' = Bit is set	'0' = Bit is cleared	x = Bit is unknown

© 2010 Microchip Technology Inc.

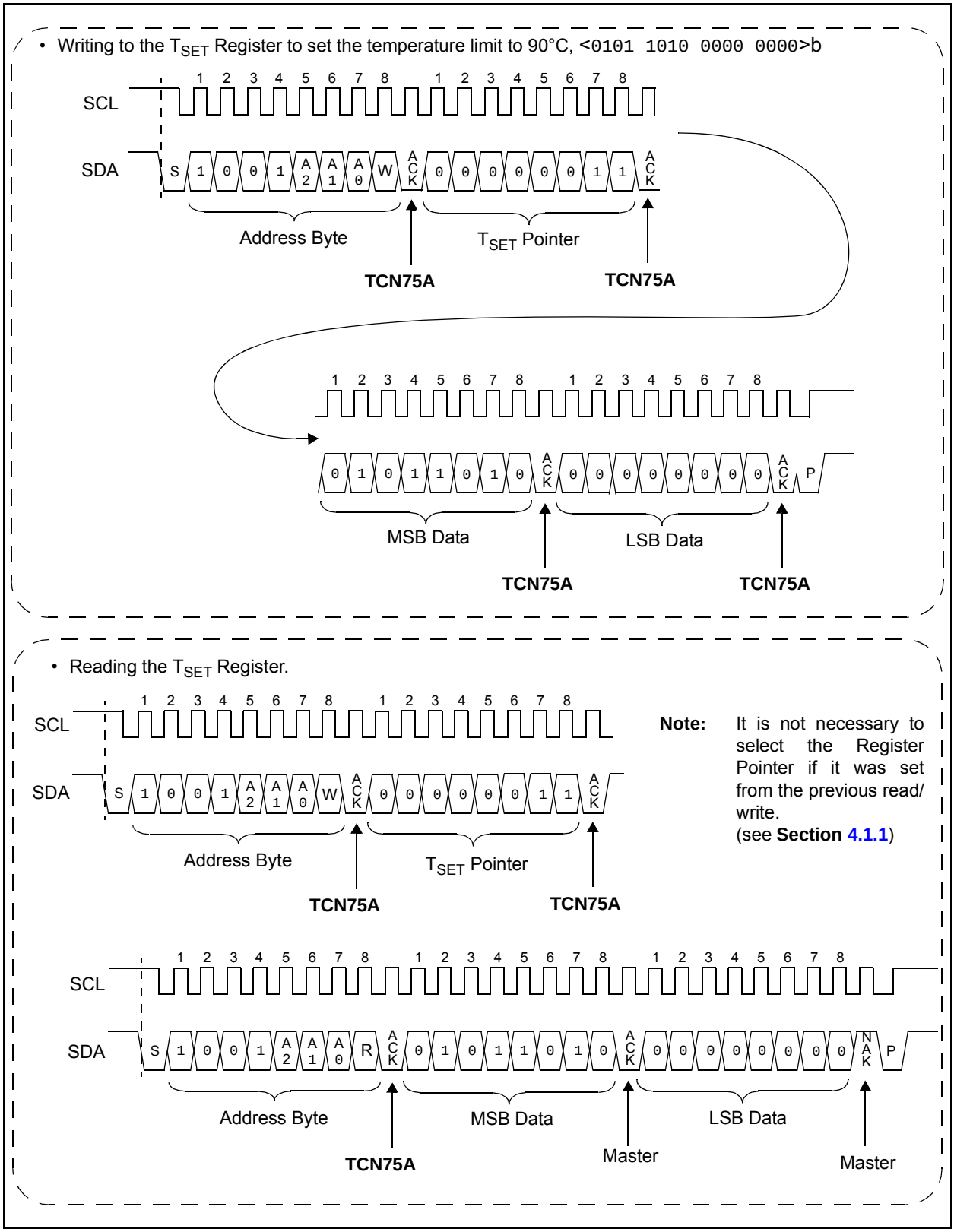

FIGURE 5-6: *Timing Diagram for Writing and Reading from the Temperature Limit-set Register (See **Section 4.0 "Serial Communication"**).*

5.3.4.1 Shutdown Mode

The Shutdown mode disables all power-consuming activities (including temperature sampling operations) while leaving the serial interface active. The device consumes 2 µA (maximum) in this mode. It remains in this mode until the Configuration register is updated to enable continuous conversion or until power is recycled.

In Shutdown mode, the CONFIG, T_A, T_{SET} and T_{HYST} registers can be read or written to; however, the serial bus activity will increase the shutdown current.

5.3.4.2 One-Shot Mode

The TCN75A can also be used in a One-shot mode that can be selected using bit 7 of the CONFIG register. The One-shot mode performs a single temperature measurement and returns to Shutdown mode. This mode is especially useful for low-power applications where temperature is measured upon command from a controller. For example, a 9-bit T_A in One-shot mode consumes 200 µA (typical) for 30 ms and 0.1 µA (typical) during shutdown.

To access this feature, the device needs to initially be in Shutdown mode. This is done by sending a byte to the CONFIG register with bit 0 set <1> and bit 7 cleared <0>. Once the device is in Shutdown mode, the CONFIG register needs to be written to again, with bit 0 and bit 7 set <1>. This begins the single conversion cycle of t_{CONV}, 30ms for 9-bit data. Once the conversion is completed, T_A is updated and bit 7 of the CONFIG register becomes cleared <0> by the TCN75A.

TABLE 5-2: SHUTDOWN AND ONE-SHOT MODE DESCRIPTION

Operational Mode	One-Shot (Bit 7)	Shutdown (Bit 0)
Continuous Conversion	0	0
Shutdown	0	1
Continuous Conversion (One-shot is ignored)	1	0
One-shot **(Note 1)**	1	1

Note 1: The shutdown command <01> needs to be programmed before sending a one-shot command <11>.

5.3.4.3 ALERT Output Configuration

The ALERT output can be configured as either a comparator output or as Interrupt Output mode using bit 1 of the CONFIG register. The polarity can also be specified as an active-high or active-low using bit 2 of the CONFIG register. The following sections describe each output mode, while Figure 5-7 gives a graphical description.

5.3.4.4 Comparator Mode

In Comparator mode, the ALERT output is asserted when T_A is greater than T_{SET}. The pin remains active until T_A is lower than T_{HYST}. The Comparator mode is useful for thermostat-type applications, such as turning on a cooling fan or triggering a system shutdown when the temperature exceeds a safe operating range.

In Comparator mode, if the device enters the Shutdown mode with asserted ALERT output, the output remains active during shutdown. The device must be operating in continuous conversion, with T_A below T_{HYST}, for the ALERT output to be deasserted.

5.3.4.5 Interrupt Mode

In Interrupt mode, the ALERT output is asserted when T_A is greater than T_{SET}. However, the output is deasserted when the user performs a read from any register. This mode is designed for interrupt-driven, microcontroller-based systems. The microcontroller receiving the interrupt will have to acknowledge the interrupt by reading any register from the TCN75A. This will clear the interrupt and the ALERT pin will become deasserted. When T_A drifts below T_{HYST}, the TCN75A outputs another interrupt and the controller needs to read a register to deassert the ALERT output. Shutting down the device will also reset, or deassert, the ALERT output.

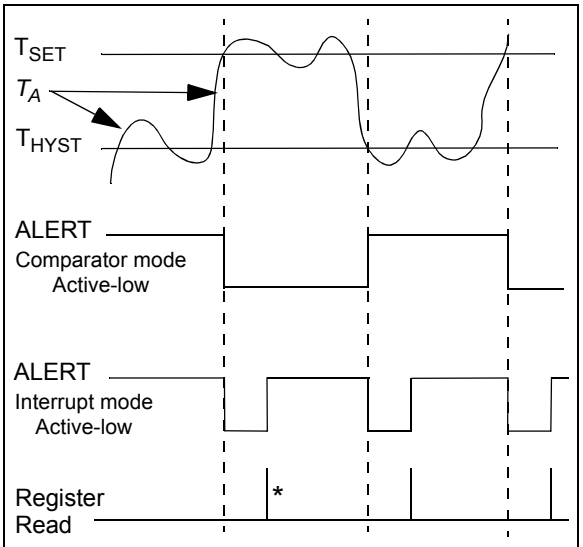

* See **Section 5.3.4.5 "Interrupt Mode"**

© 2010 Microchip Technology Inc.

FIGURE 5-7: *Alert Output.*

5.3.4.6 Fault Queue

The fault queue feature can be used as a filter to lessen the probability of spurious activation of the ALERT pin. T_A must remain above T_{SET} for the consecutive number of conversion cycles selected using the Fault Queue bits. Bit 3 and bit 4 of the CONFIG register can be used to select up to six fault queue cycles. For example, if six fault queues are selected, T_A must be greater than T_{SET} for six consecutive conversions before ALERT is asserted as a comparator or an interrupt output.

This queue setting also applies for T_{HYST}. If six fault queues are selected, T_A must remain below T_{HYST} for six consecutive conversions before ALERT is deasserted (Comparator mode) or before another interrupt is asserted (Interrupt mode).

5.3.4.7 ΣΔ ADC Resolution

The TCN75A provides access to select the ADC resolution from 9-bit to 12-bit (0.5°C to 0.0625°C resolution) using bit 6 and bit 5 of the CONFIG register. The user can gain better insight into the trends and characteristics of the ambient temperature by using a finer resolution. Increasing the resolution also reduces the quantization error. Figure 2-3 shows accuracy versus resolution.

Table 5-3 shows the T_A register conversion time for the corresponding resolution.

TABLE 5-3: RESOLUTION AND CONVERSION TIME

Bits	Resolution	t_{CONV} (typical)
9	0.5	30 ms
10	0.25	60 ms
11	0.125	120 ms
12	0.0625	240 ms

5.4 Summary of Power-up Condition

The TCN75A has an internal Power-on Reset (POR) circuit. If the power supply voltage V_{DD} glitches down to the 1.7V (typical) threshold, the device resets the registers to the power-up default settings.

Table 5-4 shows the power-up default summary.

TABLE 5-4: POWER-UP DEFAULTS

Register	Data (Hex)	Power-up Defaults
T_A	0000	0°C
T_{SET}	A000	80°C
T_{HYST}	9600	75°C
Pointer	00	Temperature register
CONFIG	00	Continuous Conversion Comparator mode Active-low Output Fault Queue 1 9-bit Resolution

At power-up, the TCN75A has an inherent 2 ms (typical) power-up delay before updating the registers with default values and start a conversion cycle. This delay reduces register corruption due to unsettled power. After power-up, it takes t_{CONV} for the TCN75A to update the T_A register with valid temperature data.

NOTES:

© 2010 Microchip Technology Inc.

6.0 APPLICATIONS INFORMATION

6.1 Connecting to the Serial Bus

The SDA and SCL serial interface are open-drain pins that require pull-up resistors. This configuration is shown in Figure 6-1.

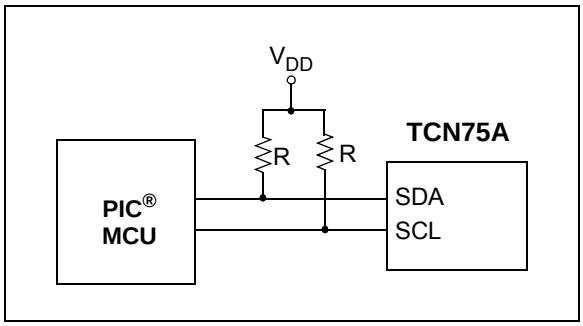

FIGURE 6-1: *Pull-up Resistors On Serial Interface.*

The TCN75A is designed to meet 0.4V (maximum) voltage drop at 3 mA of current. This allows the TCN75A to drive lower values of pull-up resistors and higher bus capacitance. In this application, all devices on the bus must meet the same pull-down current requirements.

6.2 Typical Application

Microchip provides several microcontroller product lines with Master Synchronous Serial Port Modules (MSSP) that include the I^2C interface mode. This module implements all master and slave functions and simplifies the firmware development overhead. Figure 6-2 shows a typical application using the PIC16F737 as a master to control other Microchip slave products, such as EEPROM, fan speed controllers and the TCN75A temperature sensor connected to the bus.

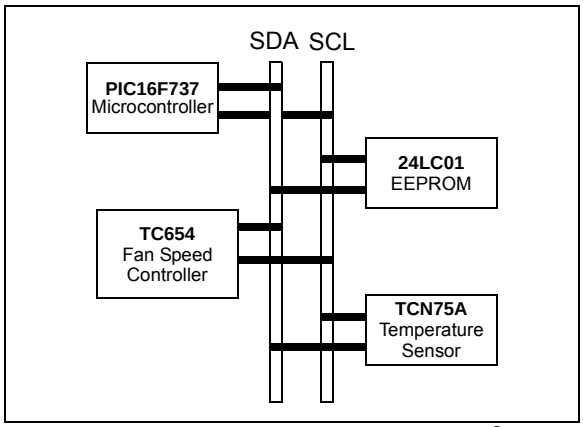

FIGURE 6-2: *Multiple Devices on I^2C™ Bus.*

The ALERT output can be wire-ORed with a number of other open-drain devices. In such applications, the output needs to be programmed as an active-low output. Most systems will require pull-up resistors for this configuration.

6.3 Layout Considerations

The TCN75A does not require any additional components besides the master controller in order to measure temperature. However, it is recommended that a decoupling capacitor of 0.1 µF to 1 µF be used between the V_{DD} and GND pins. A high-frequency ceramic capacitor is recommended. It is necessary for the capacitor to be located as close as possible to the power pins in order to provide effective noise protection.

For applications where a switching regulator is used to power the sensor, it is recommended to add a 200Ω resistor in series to V_{DD} to filter out the switcher noise from the sensor. It is also recommended to add the series resistor in applications where a linear regulator is used to step-down a switching regulator voltage to power the sensor. For example, if a linearly regulated 3.3V from a 5V switching regulator is used to power the sensor, add a 200Ω series resistor (refer to Figure 6-3).

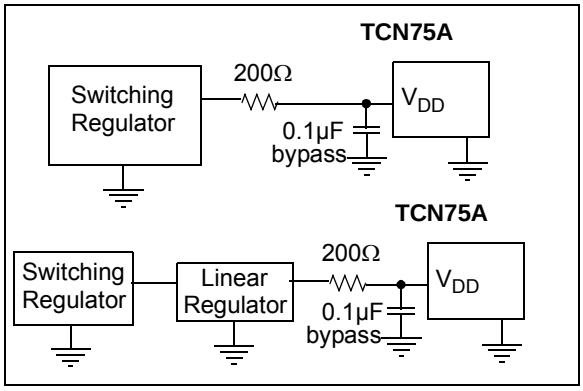

FIGURE 6-3: *Power-supply Filter using a Single Resistor.*

6.4 Thermal Considerations

The TCN75A measures temperature by monitoring the voltage of a diode located in the die. A low-impedance thermal path between the die and the Printed Circuit Board (PCB) is provided by the pins. Therefore, the TCN75A effectively monitors the temperature of the PCB. However, the thermal path for the ambient air is not as efficient because the plastic device package functions as a thermal insulator.

A potential for self-heating errors can exist if the TCN75A SDA and SCL communication lines are heavily loaded with pull-ups. Typically, the self-heating error is negligible because of the relatively small current consumption of the TCN75A. However, in order to maximize the temperature accuracy, the SDA and SCL pins need to be lightly loaded.

© 2010 Microchip Technology Inc.

NOTES:

© 2010 Microchip Technology Inc.

7.0 PACKAGING INFORMATION

7.1 Package Marking Information

8-Lead MSOP

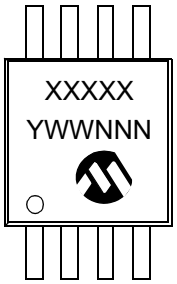

Example:

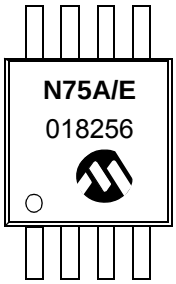

8-Lead SOIC (150 mil)

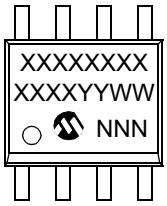

Example:



Legend:	XX...X	Customer-specific information
	Y	Year code (last digit of calendar year)
	YY	Year code (last 2 digits of calendar year)
	WW	Week code (week of January 1 is week ‘01’)
	NNN	Alphanumeric traceability code
	(e3)	Pb-free JEDEC designator for Matte Tin (Sn)
	*	This package is Pb-free. The Pb-free JEDEC designator ((e3)) can be found on the outer packaging for this package.

Note: In the event the full Microchip part number cannot be marked on one line, it will be carried over to the next line, thus limiting the number of available characters for customer-specific information.

8-Lead Plastic Micro Small Outline Package (UA) [MSOP]

Note: For the most current package drawings, please see the Microchip Packaging Specification located at http://www.microchip.com/packaging

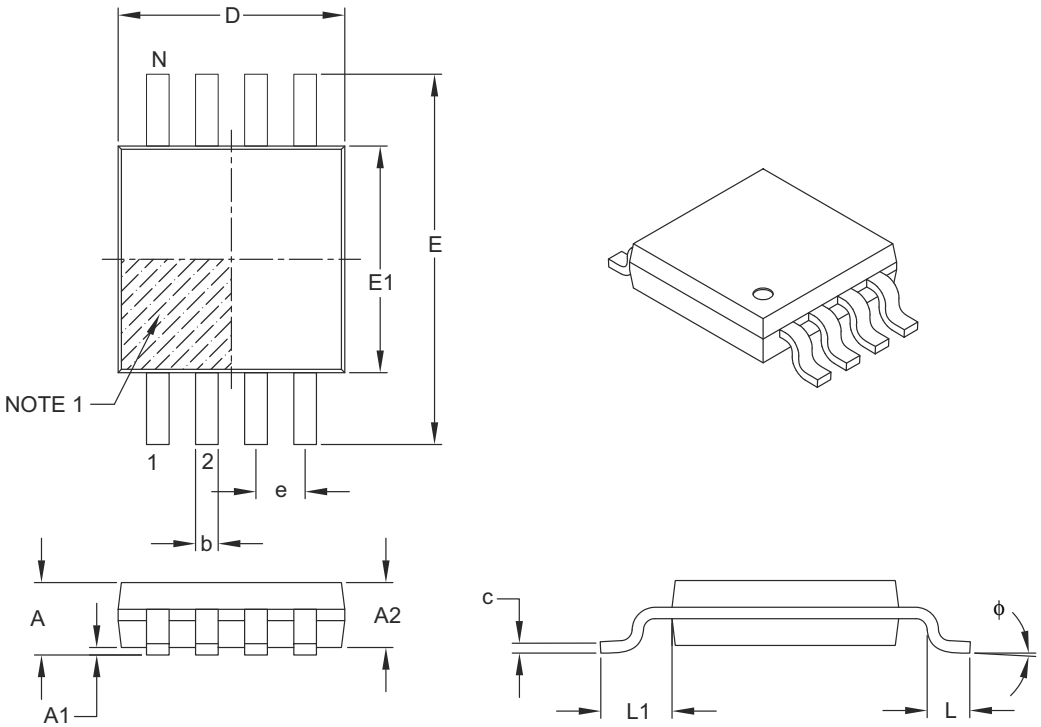

Units		MILLIMETERS		
Dimension Limits		MIN	NOM	MAX
Number of Pins	N		8	
Pitch	e		0.65 BSC	
Overall Height	A	–	–	1.10
Molded Package Thickness	A2	0.75	0.85	0.95
Standoff	A1	0.00	–	0.15
Overall Width	E		4.90 BSC	
Molded Package Width	E1		3.00 BSC	
Overall Length	D		3.00 BSC	
Foot Length	L	0.40	0.60	0.80
Footprint	L1		0.95 REF	
Foot Angle	ϕ	0°	–	8°
Lead Thickness	c	0.08	–	0.23
Lead Width	b	0.22	–	0.40

Notes:

1. Pin 1 visual index feature may vary, but must be located within the hatched area.
2. Dimensions D and E1 do not include mold flash or protrusions. Mold flash or protrusions shall not exceed 0.15 mm per side.
3. Dimensioning and tolerancing per ASME Y14.5M.

BSC: Basic Dimension. Theoretically exact value shown without tolerances.
REF: Reference Dimension, usually without tolerance, for information purposes only.

Microchip Technology Drawing C04-111B

© 2010 Microchip Technology Inc.

8-Lead Plastic Micro Small Outline Package (UA) [MSOP]

Note: For the most current package drawings, please see the Microchip Packaging Specification located at http://www.microchip.com/packaging

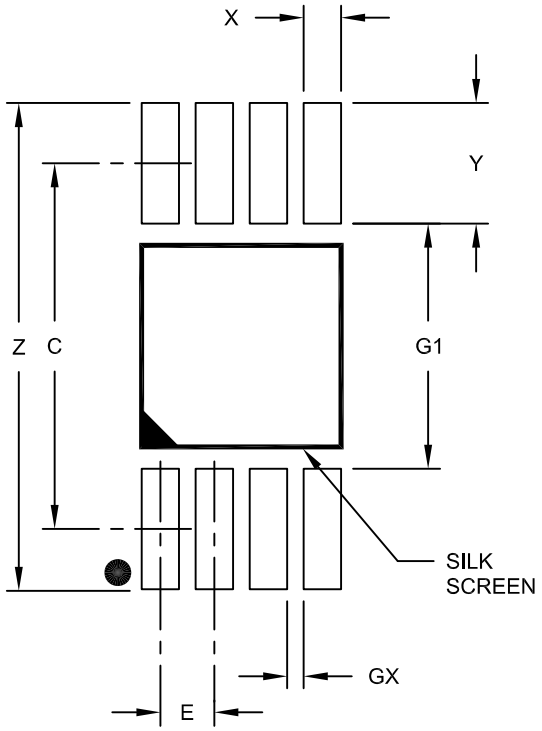

RECOMMENDED LAND PATTERN

Units		MILLIMETERS		
Dimension Limits		MIN	NOM	MAX
Contact Pitch	E		0.65 BSC	
Contact Pad Spacing	C		4.40	
Overall Width	Z			5.85
Contact Pad Width (X8)	X1			0.45
Contact Pad Length (X8)	Y1			1.45
Distance Between Pads	G1	2.95		
Distance Between Pads	GX	0.20		

Notes:

1. Dimensioning and tolerancing per ASME Y14.5M

BSC: Basic Dimension. Theoretically exact value shown without tolerances.

Microchip Technology Drawing No. C04-2111A

8-Lead Plastic Small Outline (OA) - Narrow, 3.90 mm Body [SOIC]

Note: For the most current package drawings, please see the Microchip Packaging Specification located at http://www.microchip.com/packaging

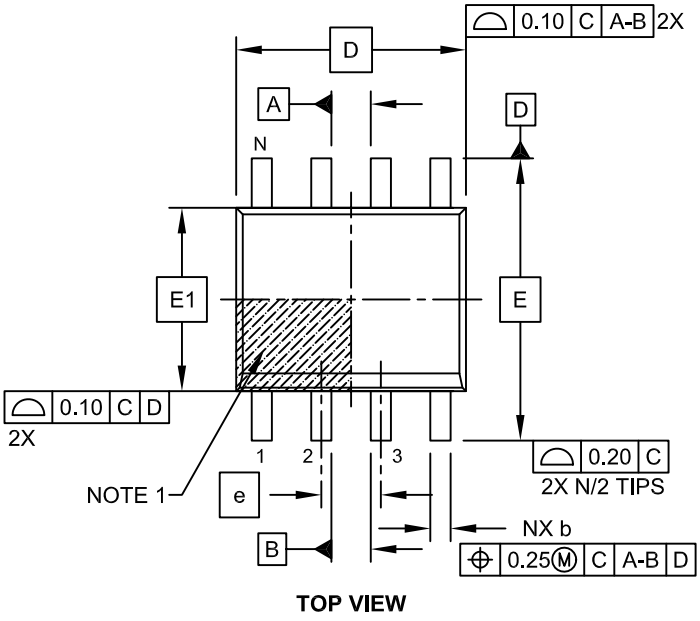

TOP VIEW

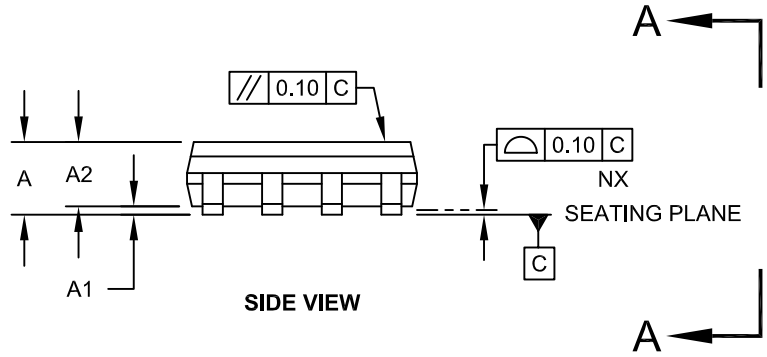

SIDE VIEW

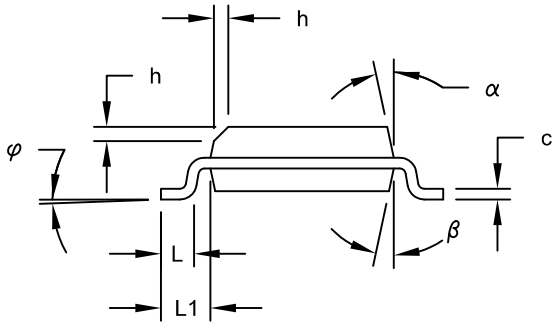

VIEW A-A

Microchip Technology Drawing No. C04-057C Sheet 1 of 2

© 2010 Microchip Technology Inc.

8-Lead Plastic Small Outline (OA) - Narrow, 3.90 mm Body [SOIC]

Note: For the most current package drawings, please see the Microchip Packaging Specification located at http://www.microchip.com/packaging

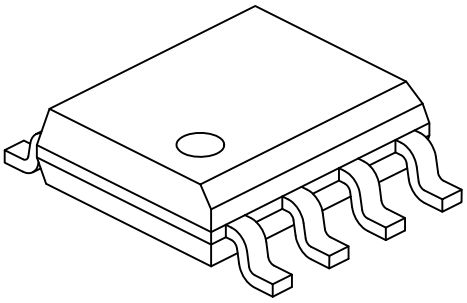

Units		MILLIMETERS		
Dimension Limits		MIN	NOM	MAX
Number of Pins	N		8	
Pitch	e		1.27 BSC	
Overall Height	A	-	-	1.75
Molded Package Thickness	A2	1.25	-	-
Standoff §	A1	0.10	-	0.25
Overall Width	E		6.00 BSC	
Molded Package Width	E1		3.90 BSC	
Overall Length	D		4.90 BSC	
Chamfer (Optional)	h	0.25	-	0.50
Foot Length	L	0.40	-	1.27
Footprint	L1		1.04 REF	
Foot Angle	φ	0°	-	8°
Lead Thickness	c	0.17	-	0.25
Lead Width	b	0.31	-	0.51
Mold Draft Angle Top	α	5°	-	15°
Mold Draft Angle Bottom	β	5°	-	15°

Notes:

1. Pin 1 visual index feature may vary, but must be located within the hatched area.
2. § Significant Characteristic
3. Dimensions D and E1 do not include mold flash or protrusions. Mold flash or protrusions shall not exceed 0.15mm per side.
4. Dimensioning and tolerancing per ASME Y14.5M

BSC: Basic Dimension. Theoretically exact value shown without tolerances.

REF: Reference Dimension, usually without tolerance, for information purposes only.

Microchip Technology Drawing No. C04-057C Sheet 2 of 2

8-Lead Plastic Small Outline (OA) – Narrow, 3.90 mm Body [SOIC]

Note: For the most current package drawings, please see the Microchip Packaging Specification located at http://www.microchip.com/packaging

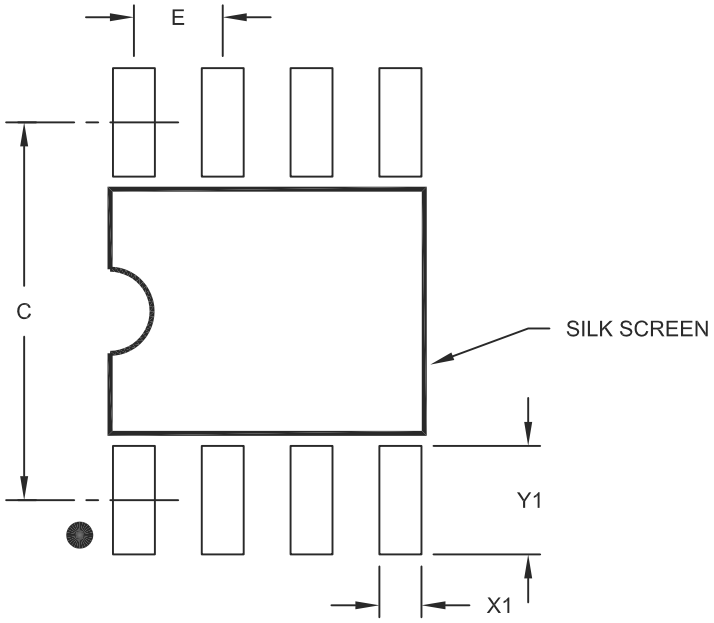

RECOMMENDED LAND PATTERN

Units		MILLIMETERS		
Dimension Limits		MIN	NOM	MAX
Contact Pitch	E		1.27 BSC	
Contact Pad Spacing	C		5.40	
Contact Pad Width (X8)	X1			0.60
Contact Pad Length (X8)	Y1			1.55

Notes:

1. Dimensioning and tolerancing per ASME Y14.5M

BSC: Basic Dimension. Theoretically exact value shown without tolerances.

Microchip Technology Drawing No. C04-2057A

© 2010 Microchip Technology Inc.

APPENDIX A: REVISION HISTORY

Revision D (September 2010)

The following is the list of modifications:

1. Updated Section 6.3 Layout Considerations.

Revision C (November 2006)

The following is the list of modifications:

1. Updated the accuracy specification limits.
2. Numerous edits throughout the data sheet.
3. Updated the package outline drawings.
4. Added disclaimers to package outline drawings.
5. Updated the package marking information for pb-free markings.

Revision B (May 2006)

The following is the list of modifications:

1. Revised Product ID System; Added OA713 and UA713 packages.

Revision A (November 2007)

- Original Release of this Document.

NOTES:

© 2010 Microchip Technology Inc.

PRODUCT IDENTIFICATION SYSTEM

To order or obtain information, e.g., on pricing or delivery, refer to the factory or the listed sales office.

PART NO.	X	/XX
Device	Temperature Range	Package

Device:	TCN75A:	Temperature Sensor
Temperature Range:	V =	-40°C to +125°C
Package:	OA =	Plastic SOIC, (150 mil Body), 8-lead
	OA713 =	Plastic SOIC, (150 mil Body), 8-lead, Tape and Reel
	UA =	Plastic Micro Small Outline (MSOP), 8-lead
	UA713 =	Plastic Micro Small Outline (MSOP), 8-lead Tape and Reel

Examples:

a)	TCN75AVOA:	8LD SOIC package.
b)	TCN75AVOA713:	Tape and Reel, 8LD SOIC package.
a)	TCN75AVUA:	8LD MSOP package.
b)	TCN75AVUA713:	Tape and Reel, 8LD MSOP package.

NOTES:

© 2010 Microchip Technology Inc.

Note the following details of the code protection feature on Microchip devices:

- Microchip products meet the specification contained in their particular Microchip Data Sheet.
- Microchip believes that its family of products is one of the most secure families of its kind on the market today, when used in the intended manner and under normal conditions.
- There are dishonest and possibly illegal methods used to breach the code protection feature. All of these methods, to our knowledge, require using the Microchip products in a manner outside the operating specifications contained in Microchip's Data Sheets. Most likely, the person doing so is engaged in theft of intellectual property.
- Microchip is willing to work with the customer who is concerned about the integrity of their code.
- Neither Microchip nor any other semiconductor manufacturer can guarantee the security of their code. Code protection does not mean that we are guaranteeing the product as "unbreakable."

Code protection is constantly evolving. We at Microchip are committed to continuously improving the code protection features of our products. Attempts to break Microchip's code protection feature may be a violation of the Digital Millennium Copyright Act. If such acts allow unauthorized access to your software or other copyrighted work, you may have a right to sue for relief under that Act.

Information contained in this publication regarding device applications and the like is provided only for your convenience and may be superseded by updates. It is your responsibility to ensure that your application meets with your specifications. MICROCHIP MAKES NO REPRESENTATIONS OR WARRANTIES OF ANY KIND WHETHER EXPRESS OR IMPLIED, WRITTEN OR ORAL, STATUTORY OR OTHERWISE, RELATED TO THE INFORMATION, INCLUDING BUT NOT LIMITED TO ITS CONDITION, QUALITY, PERFORMANCE, MERCHANTABILITY OR FITNESS FOR PURPOSE**.** Microchip disclaims all liability arising from this information and its use. Use of Microchip devices in life support and/or safety applications is entirely at the buyer's risk, and the buyer agrees to defend, indemnify and hold harmless Microchip from any and all damages, claims, suits, or expenses resulting from such use. No licenses are conveyed, implicitly or otherwise, under any Microchip intellectual property rights.

Trademarks

The Microchip name and logo, the Microchip logo, dsPIC, KEELOQ, KEELOQ logo, MPLAB, PIC, PICmicro, PICSTART, PIC^{32} logo, rfPIC and UNI/O are registered trademarks of Microchip Technology Incorporated in the U.S.A. and other countries.

FilterLab, Hampshire, HI-TECH C, Linear Active Thermistor, MXDEV, MXLAB, SEEVAL and The Embedded Control Solutions Company are registered trademarks of Microchip Technology Incorporated in the U.S.A.

Analog-for-the-Digital Age, Application Maestro, CodeGuard, dsPICDEM, dsPICDEM.net, dsPICworks, dsSPEAK, ECAN, ECONOMONITOR, FanSense, HI-TIDE, In-Circuit Serial Programming, ICSP, Mindi, MiWi, MPASM, MPLAB Certified logo, MPLIB, MPLINK, mTouch, Omniscient Code Generation, PICC, PICC-18, PICDEM, PICDEM.net, PICkit, PICtail, REAL ICE, rfLAB, Select Mode, Total Endurance, TSHARC, UniWinDriver, WiperLock and ZENA are trademarks of Microchip Technology Incorporated in the U.S.A. and other countries.

SQTP is a service mark of Microchip Technology Incorporated in the U.S.A.

All other trademarks mentioned herein are property of their respective companies.

© 2010, Microchip Technology Incorporated, Printed in the U.S.A., All Rights Reserved.

Printed on recycled paper.

ISBN: 978-1-60932-565-7

QUALITY MANAGEMENT SYSTEM
CERTIFIED BY DNV
ISO/TS 16949:2002

Microchip received ISO/TS-16949:2002 certification for its worldwide headquarters, design and wafer fabrication facilities in Chandler and Tempe, Arizona; Gresham, Oregon and design centers in California and India. The Company's quality system processes and procedures are for its PIC® MCUs and dsPIC® DSCs, KEELOQ® code hopping devices, Serial EEPROMs, microperipherals, nonvolatile memory and analog products. In addition, Microchip's quality system for the design and manufacture of development systems is ISO 9001:2000 certified.

Worldwide Sales and Service

AMERICAS

Corporate Office
2355 West Chandler Blvd.
Chandler, AZ 85224-6199
Tel: 480-792-7200
Fax: 480-792-7277
Technical Support:
http://support.microchip.com
Web Address:
www.microchip.com

Atlanta
Duluth, GA
Tel: 678-957-9614
Fax: 678-957-1455

Boston
Westborough, MA
Tel: 774-760-0087
Fax: 774-760-0088

Chicago
Itasca, IL
Tel: 630-285-0071
Fax: 630-285-0075

Cleveland
Independence, OH
Tel: 216-447-0464
Fax: 216-447-0643

Dallas
Addison, TX
Tel: 972-818-7423
Fax: 972-818-2924

Detroit
Farmington Hills, MI
Tel: 248-538-2250
Fax: 248-538-2260

Kokomo
Kokomo, IN
Tel: 765-864-8360
Fax: 765-864-8387

Los Angeles
Mission Viejo, CA
Tel: 949-462-9523
Fax: 949-462-9608

Santa Clara
Santa Clara, CA
Tel: 408-961-6444
Fax: 408-961-6445

Toronto
Mississauga, Ontario,
Canada
Tel: 905-673-0699
Fax: 905-673-6509

ASIA/PACIFIC

Asia Pacific Office
Suites 3707-14, 37th Floor
Tower 6, The Gateway
Harbour City, Kowloon
Hong Kong
Tel: 852-2401-1200
Fax: 852-2401-3431

Australia - Sydney
Tel: 61-2-9868-6733
Fax: 61-2-9868-6755

China - Beijing
Tel: 86-10-8528-2100
Fax: 86-10-8528-2104

China - Chengdu
Tel: 86-28-8665-5511
Fax: 86-28-8665-7889

China - Chongqing
Tel: 86-23-8980-9588
Fax: 86-23-8980-9500

China - Hong Kong SAR
Tel: 852-2401-1200
Fax: 852-2401-3431

China - Nanjing
Tel: 86-25-8473-2460
Fax: 86-25-8473-2470

China - Qingdao
Tel: 86-532-8502-7355
Fax: 86-532-8502-7205

China - Shanghai
Tel: 86-21-5407-5533
Fax: 86-21-5407-5066

China - Shenyang
Tel: 86-24-2334-2829
Fax: 86-24-2334-2393

China - Shenzhen
Tel: 86-755-8203-2660
Fax: 86-755-8203-1760

China - Wuhan
Tel: 86-27-5980-5300
Fax: 86-27-5980-5118

China - Xian
Tel: 86-29-8833-7252
Fax: 86-29-8833-7256

China - Xiamen
Tel: 86-592-2388138
Fax: 86-592-2388130

China - Zhuhai
Tel: 86-756-3210040
Fax: 86-756-3210049

ASIA/PACIFIC

India - Bangalore
Tel: 91-80-3090-4444
Fax: 91-80-3090-4123

India - New Delhi
Tel: 91-11-4160-8631
Fax: 91-11-4160-8632

India - Pune
Tel: 91-20-2566-1512
Fax: 91-20-2566-1513

Japan - Yokohama
Tel: 81-45-471- 6166
Fax: 81-45-471-6122

Korea - Daegu
Tel: 82-53-744-4301
Fax: 82-53-744-4302

Korea - Seoul
Tel: 82-2-554-7200
Fax: 82-2-558-5932 or
82-2-558-5934

Malaysia - Kuala Lumpur
Tel: 60-3-6201-9857
Fax: 60-3-6201-9859

Malaysia - Penang
Tel: 60-4-227-8870
Fax: 60-4-227-4068

Philippines - Manila
Tel: 63-2-634-9065
Fax: 63-2-634-9069

Singapore
Tel: 65-6334-8870
Fax: 65-6334-8850

Taiwan - Hsin Chu
Tel: 886-3-6578-300
Fax: 886-3-6578-370

Taiwan - Kaohsiung
Tel: 886-7-213-7830
Fax: 886-7-330-9305

Taiwan - Taipei
Tel: 886-2-2500-6610
Fax: 886-2-2508-0102

Thailand - Bangkok
Tel: 66-2-694-1351
Fax: 66-2-694-1350

EUROPE

Austria - Wels
Tel: 43-7242-2244-39
Fax: 43-7242-2244-393

Denmark - Copenhagen
Tel: 45-4450-2828
Fax: 45-4485-2829

France - Paris
Tel: 33-1-69-53-63-20
Fax: 33-1-69-30-90-79

Germany - Munich
Tel: 49-89-627-144-0
Fax: 49-89-627-144-44

Italy - Milan
Tel: 39-0331-742611
Fax: 39-0331-466781

Netherlands - Drunen
Tel: 31-416-690399
Fax: 31-416-690340

Spain - Madrid
Tel: 34-91-708-08-90
Fax: 34-91-708-08-91

UK - Wokingham
Tel: 44-118-921-5869
Fax: 44-118-921-5820

08/04/10

© 2010 Microchip Technology Inc.