SCTS040B – JUNE 1989 – REVISED JUNE 1997

- **Meet or Exceed Bell Standard LSSGR Requirements**
- **Externally-Controlled Negative Firing Voltage . . . –90 V Max**
- **Accurately Controlled, Wide Negative Firing Voltage Range . . . –5 V to –85 V**
- **Positive Surge Current (see Note 1):**

	TCM1030	TCM1050
10/1000	16 A	30 A
10/160	25 A	45 A
2/10	35 A	50 A

- **Negative Surge Current (see Note 1):**

	TCM1030	TCM1050
10/1000	–16 A	–25 A
10/160	–25 A	–29 A
2/10	–35 A	–36 A

- **High Holding Current**
  - **TCM1030 . . . 100 mA Min**
  - **TCM1050 . . . 150 mA Min**

D OR P PACKAGE
(TOP VIEW)

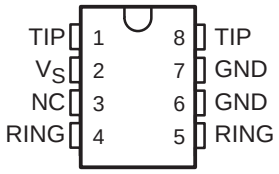

NC – No internal connection
The D package is available taped and reeled. Add R suffix (i.e., TCM1030DR).

description

The TCM1030 and TCM1050 dual transient-voltage suppressors are designed specifically for telephone line card protection against lightning and transients (voltage transients) induced by ac lines. One of the TIP terminals (pin 1 or 8) and one of the RING terminals (pin 4 or 5) are connected to the tip and ring circuits of a SLIC (subscriber-line interface circuit). The battery feed connections between the SLIC and the subscriber line are from the remaining TIP (pin 1 or 8) and RING (pin 4 or 5) through the TCM1030 or the TCM1050 to the tip and ring lines. Transients are suppressed between tip and ground, and ring and ground.

Positive transients are clamped by diodes D1 and D2. Negative transients that are more negative than V_S cause the SCRs, Q1 and Q2, to crowbar. The high holding current of the SCRs prevent dc latchup as the transient subsides.

The TCM1030 and TCM1050 are characterized for operation from –40°C to 85°C.

NOTE 1: The notation 10/1000 refers to a waveshape having t_r = 10 μs and t_w = 1000 μs ending at 50% of the peak value. The notation 10/160 is t_r = 10 μs and t_w = 160 μs. The notation 2/10 is t_r = 2 μs and t_w = 10 μs.

Please be aware that an important notice concerning availability, standard warranty, and use in critical applications of Texas Instruments semiconductor products and disclaimers thereto appears at the end of this data sheet.

PRODUCTION DATA information is current as of publication date. Products conform to specifications per the terms of Texas Instruments standard warranty. Production processing does not necessarily include testing of all parameters.

Copyright © 1997, Texas Instruments Incorporated

functional block diagram

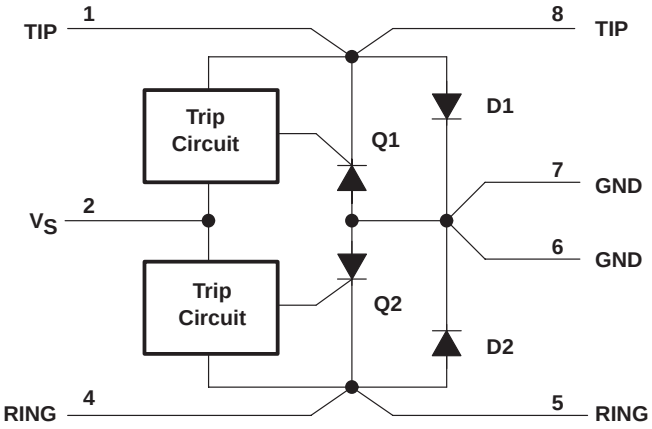

absolute maximum ratings over operating free-air temperature range (unless otherwise noted)†

TCM1030 nonrepetitive peak surge current (see Note 1):	10/1000	±16 A
	10/160	±25 A
	2/10	±35 A
TCM1050 nonrepetitive peak positive surge current:	10/1000	30 A
(see Note 1)	10/160	45 A
	2/10	50 A
TCM1050 nonrepetitive peak negative surge current:	10/1000	–25 A
(see Note 1)	10/160	–29 A
	2/10	–36 A
Nonrepetitive peak surge current, t_w = 10 ms, half sinewave (see Note 2)		5 A
Continuous 60-Hz sinewave at 1 A		2 s
Continuous total power dissipation		See Dissipation Rating Table
Operating free-air temperature range, T_A		–40°C to 85°C
Storage temperature range, T_{stg}		–40°C to 150°C
Lead temperature 1,6 mm (1/16 inch) from case for 10 seconds: D or P package		260°C

† Stresses beyond those listed under “absolute maximum ratings” may cause permanent damage to the device. These are stress ratings only, and functional operation of the device at these or any other conditions beyond those indicated under “recommended operating conditions” is not implied. Exposure to absolute-maximum-rated conditions for extended periods may affect device reliability.

NOTES: 1. The notation 10/1000 refers to a waveshape having t_r = 10 μs and t_w = 1000 μs ending at 50% of the peak value. The notation 10/160 is t_r = 10 μs and t_w = 160 μs. The notation 2/10 is t_r = 2 μs and t_w = 10 μs.

2. This value applies when the case temperature is at or below 85°C. The surge current may be repeated after the device has returned to thermal equilibrium.

DISSIPATION RATING TABLE

PACKAGE	$T_A \leq 25°C$ POWER RATING	OPERATING FACTOR ABOVE T_A = 25°C	T_A = 85°C POWER RATING
D	725 mW	5.8 mW/°C	377 mW
P	1000 mW	8.0 mW/°C	520 mW

electrical characteristics over operating free-air temperature range (unless otherwise noted)

PARAMETER		TEST CONDITIONS	TCM1030			TCM1050			UNIT
			MIN	TYP†	MAX	MIN	TYP†	MAX	
V_{CF}	Forward clamping voltage (diode forward voltage) (see Note 3)	I_{FM} = 1-A transient		1.2	2		1.2	2	V
		I_{FM} = 10-A transient		2.5	4		2	4	
		I_{FM} = 16-A transient		4	5		2.5	5	
		I_{FM} = 30-A transient	—	—	—		3.1	5	
$V_{C(R)}$	Reverse clamping voltage (SCR on-state voltage) (see Note 3)	I_{TM} = 1-A transient		–1.2	–2		–1.2	–2	V
		I_{TM} = 10-A transient		–2.5	–4		–2.5	–4	
		I_{TM} = 16-A transient		–4	–5		–3	–5	
		I_{TM} = 30-A transient	—	—	—		–4.8	–7	
$I_{I(trip)}$	Trip current (see Note 4)	V_S = –50 V	–100		–325	–100		–325	mA
I_H	Holding current	V_S = –50 V	–100			–150			mA
$V_{I(trip)}$	Trip voltage	V_S = –50 V, I = trip current	–50		–55	–50		–55	V
		V_S = –65 V, I = trip current	–65		–70	–65		–70	
		V_S = –85 V, I = trip current	—	—	—	–85		–90	
$I_{I(stby)}$	Standby current	TIP and RING at –85 V or GND, V_S = –85 V			±5			±5	μA
	Transient overshoot voltage	V_S = –50 V, t_r = 10 ns		2.5			2.5		V
C_{off}	Off-state (high impedance) capacitance	TIP and RING at –50 V		25			25		pF
		TIP and RING at GND		50			50		
dv/dt	Critical rate of rise of off-state voltage (see Note 5)	V_S open, V_S = –50 V		–1			–1		kV/μs

† All typical values are at T_A = 25°C.

NOTES: 3. The current flows through one TIP (or RING) terminal and one of the GND terminals. The voltage is measured between the other TIP (or RING) terminal and the other GND terminal. Measurement time ≤ 1 ms.

4. The negative value of trip current refers to the current flowing out of TIP or RING on the line side that is sufficient in magnitude to trigger the SCRs. Measurement time ≤ 1 ns.

5. The critical dv/dt is measured using a linear rate of rise with the maximum voltage limited to –50 V with V_S connected to TIP or RING being measured.

TYPICAL CHARACTERISTICS

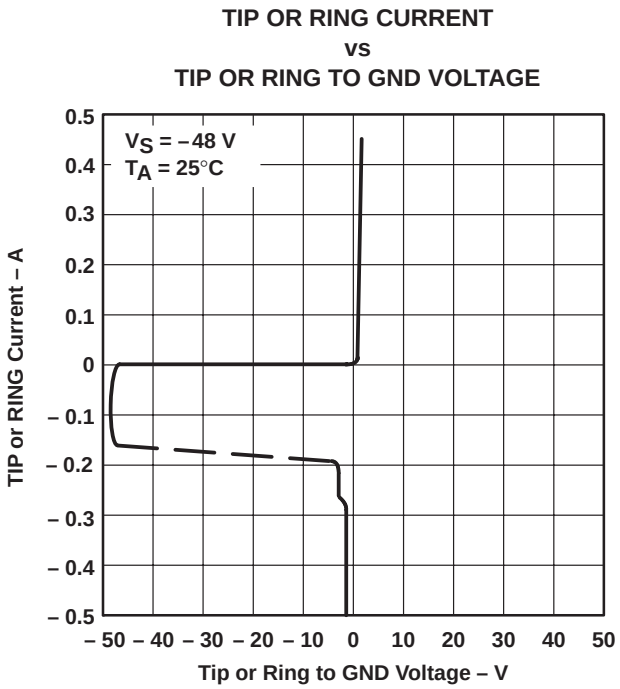

Figure 1

APPLICATION INFORMATION

The trip voltage represents the most negative level of stress applied to the system. Positive transients are clamped by diodes D1 and D2. When a negative transient is applied, current flows from V_S to TIP or RING where the transient voltage is applied. When the current through TIP or RING reaches the pulse-trip current, the SCR turns on and shorts TIP or RING to GND. The majority of the transient energy is dissipated in the external resistor (nominally 100 Ω for the TCM1030 and 70 Ω for the TCM1050). Current into V_S ceases when the SCR turns on. When the energy of the transient has been dissipated so that the current into TIP or RING due to the transient plus the battery feed supply is less than the holding current, the SCR turns off.

To help ensure reliability and consistency in the firing voltage, it is recommended that two capacitors be connected between V_S and GND, as close to the device terminals as possible. One capacitor should be a 0.1-μF, 100-V ceramic unit and the other, a 0.47-μF, 100-V stacked-film (not wound) metalized plastic capacitor. If inductance is present in the line to V_S, these capacitors help prevent overshoot in the firing voltage during fast rise-time transients.

To avoid dc latchup after the SCR has fired, the current must be less than the holding current, I_H. To prevent dc latchup, the line feed current must be limited to the following conditions:

$$\frac{V_{TP} - V_{RP}}{R_{line} + 2R_p} < I_H$$

where V_{TP} and V_{RP} are the voltages on TIP and RING, respectively, of the TCM1030 or TCM1050. Induced ac currents into TIP or RING (e.g., power-line inductive coupling) must be less than the trip current to prevent the SCR from firing.

APPLICATION INFORMATION

Line short-circuits to external power sources can damage the suppressor due to excessive power dissipation. Conventional protection techniques, such as fuses or PTC (positive temperature coefficient) thermistors, should be used to eliminate or reduce the fault current.

Figure 2 shows a typical line card application circuit.

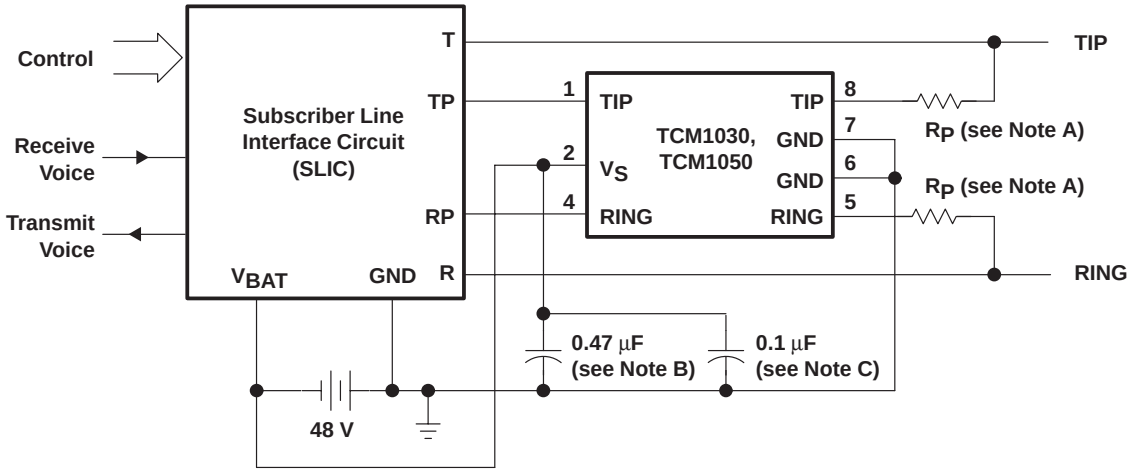

NOTES: A. R_P is 100 Ω minimum for TCM1030 and 70 Ω minimum for TCM1050.
B. 0.47 µF, 100 V stacked film metalized plastic capacitor
C. 0.1 µF, 100 V ceramic capacitor

Figure 2. Typical Line Card Application Circuit

MECHANICAL DATA

D (R-PDSO-G)** **PLASTIC SMALL-OUTLINE PACKAGE**

14 PIN SHOWN

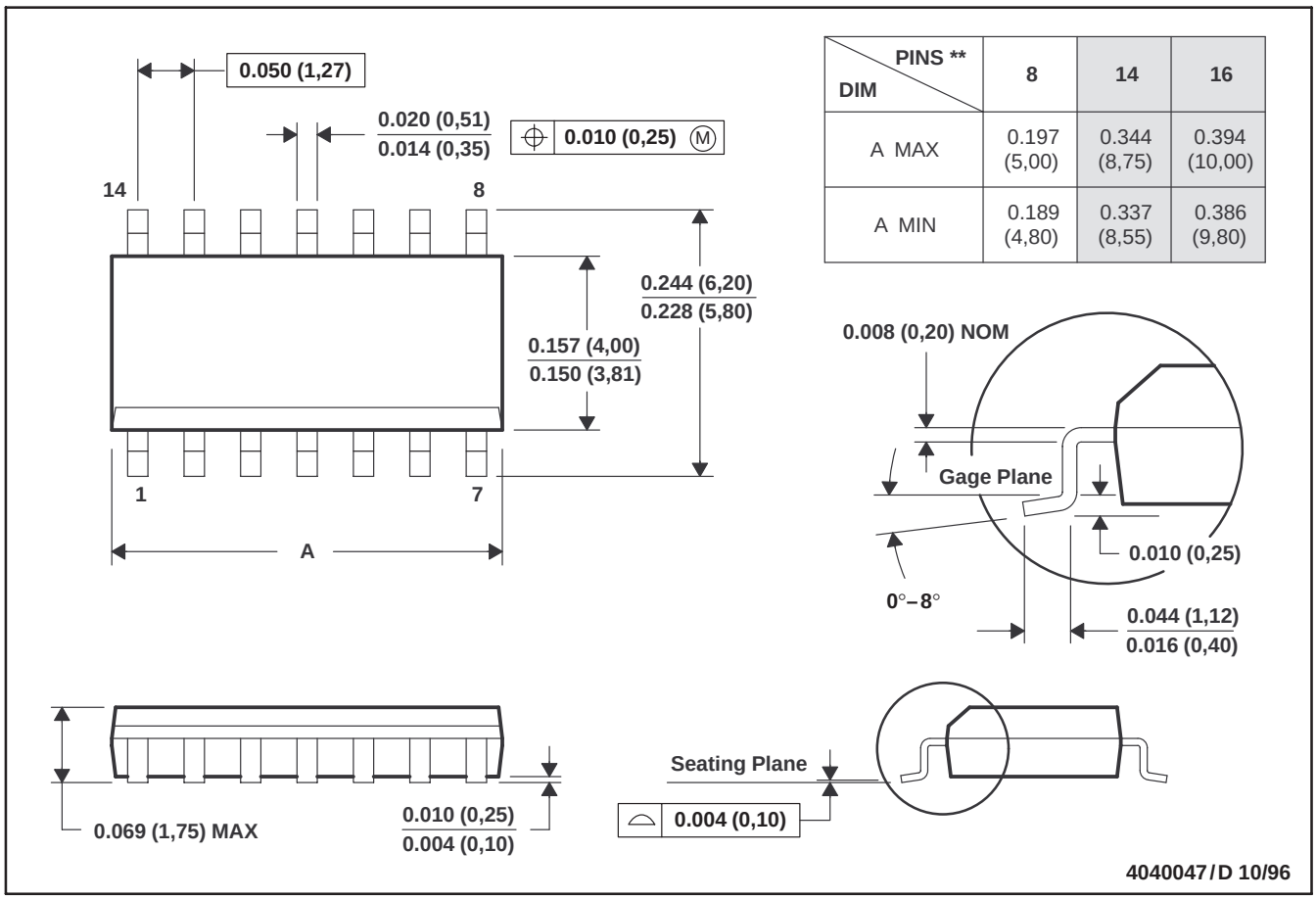

DIM \ PINS **	8	14	16
A MAX	0.197 (5,00)	0.344 (8,75)	0.394 (10,00)
A MIN	0.189 (4,80)	0.337 (8,55)	0.386 (9,80)

NOTES: A. All linear dimensions are in inches (millimeters).
B. This drawing is subject to change without notice.
C. Body dimensions do not include mold flash or protrusion, not to exceed 0.006 (0,15).
D. Falls within JEDEC MS-012

MECHANICAL DATA

P (R-PDIP-T8) **PLASTIC DUAL-IN-LINE PACKAGE**

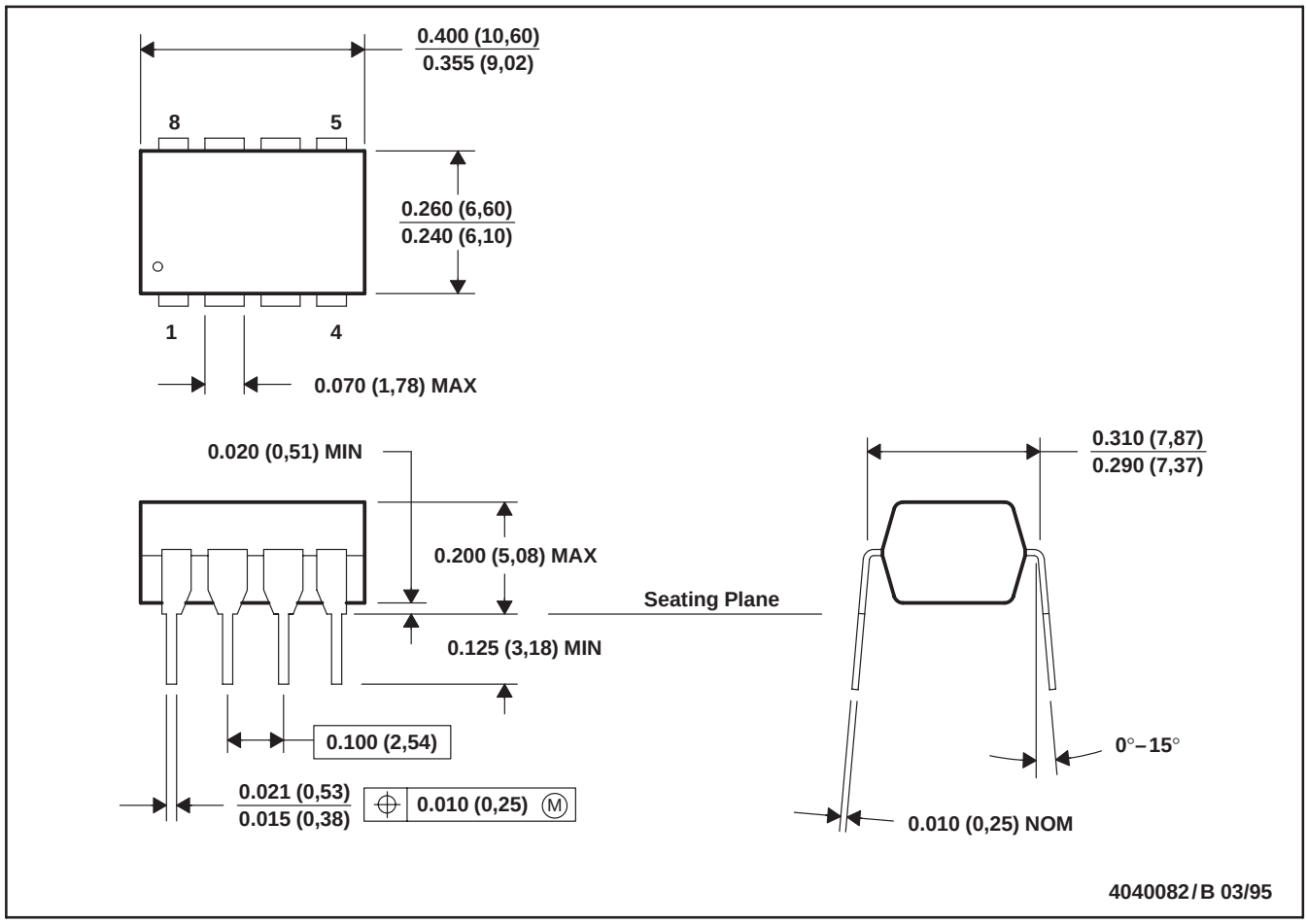

NOTES: A. All linear dimensions are in inches (millimeters).
B. This drawing is subject to change without notice.
C. Falls within JEDEC MS-001

PRODUCT PREVIEW

IMPORTANT NOTICE

Texas Instruments and its subsidiaries (TI) reserve the right to make changes to their products or to discontinue any product or service without notice, and advise customers to obtain the latest version of relevant information to verify, before placing orders, that information being relied on is current and complete. All products are sold subject to the terms and conditions of sale supplied at the time of order acknowledgement, including those pertaining to warranty, patent infringement, and limitation of liability.

TI warrants performance of its semiconductor products to the specifications applicable at the time of sale in accordance with TI's standard warranty. Testing and other quality control techniques are utilized to the extent TI deems necessary to support this warranty. Specific testing of all parameters of each device is not necessarily performed, except those mandated by government requirements.

CERTAIN APPLICATIONS USING SEMICONDUCTOR PRODUCTS MAY INVOLVE POTENTIAL RISKS OF DEATH, PERSONAL INJURY, OR SEVERE PROPERTY OR ENVIRONMENTAL DAMAGE ("CRITICAL APPLICATIONS"). TI SEMICONDUCTOR PRODUCTS ARE NOT DESIGNED, AUTHORIZED, OR WARRANTED TO BE SUITABLE FOR USE IN LIFE-SUPPORT DEVICES OR SYSTEMS OR OTHER CRITICAL APPLICATIONS. INCLUSION OF TI PRODUCTS IN SUCH APPLICATIONS IS UNDERSTOOD TO BE FULLY AT THE CUSTOMER'S RISK.

In order to minimize risks associated with the customer's applications, adequate design and operating safeguards must be provided by the customer to minimize inherent or procedural hazards.

TI assumes no liability for applications assistance or customer product design. TI does not warrant or represent that any license, either express or implied, is granted under any patent right, copyright, mask work right, or other intellectual property right of TI covering or relating to any combination, machine, or process in which such semiconductor products or services might be or are used. TI's publication of information regarding any third party's products or services does not constitute TI's approval, warranty or endorsement thereof.

Copyright © 1998, Texas Instruments Incorporated