TOSHIBA CMOS Linear Integrated Circuit Silicon Monolithic

TCK305G

28 V, Single input – Single Output Load Switch IC with Over Voltage Protection

The TCK30 series are 28 V high input voltage Single Inputs-Single Output load switch ICs. It has Over Voltage

Protection function featuring low switch ON resistance, high output current and wide input voltage operation. Switch ON resistance is only 73 mΩ at 4.5 V, - 1.0 A load conditions. And these feature a slew rate control driver, thermal shutdown and Flag function. Also it can block reverse current if switch turned off. Output current is available up to 3 A. Thus this is suitable for power management such as Battery Charge application.

This device is available in 0.5mm pitch ultra small package WCSP9 (1.5 mm x 1.5 mm, t: 0.5 mm (Typ.)).Thus this devices is ideal for portable applications that require high-density board assembly such as cellular phone.

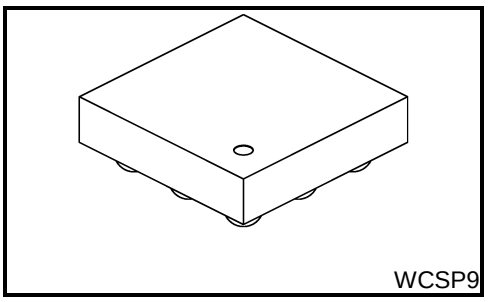

Weight : 3.5 mg (Typ.)

Feature

- High input voltage: V_{IN} (Max) = 28 V
- High output current: I_{OUT} (DC) = 3.0 A
- Low ON resistance : R_{ON} = 73 mΩ (Typ.) at V_{IN} = 4.5 V, I_{OUT} = - 1.0 A
- Over Voltage Lockout : 10.5 V (Typ.)
- Under Voltage Lockout: 2.9 V (Typ.)
- FLAG indicates
- Internal 15 ms startup hold
- Reverse current blocking (SW OFF state)
- Inrush current reducing circuit
- Thermal Shutdown function
- Small package: 0.5 mm pitch WCSP9 (1.5 mm x 1.5 mm, t: 0.5 mm(Typ.)) , P_D = 1.65 W

Top marking

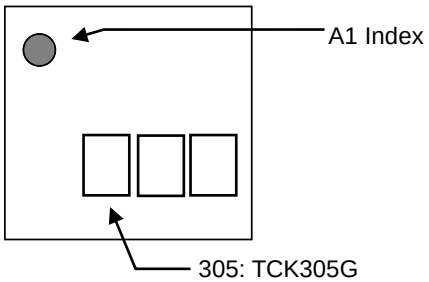

Start of commercial production
2015-09

Absolute Maximum Ratings (Ta = 25°C)

Characteristics	Symbol	Rating			Unit
Input voltage	V_{IN}	-0.3 to 30			V
Control voltage	V_{CT}, V_{CE}	-0.3 to 6			V
Output voltage	V_{OUT}	-0.3 to 18			V
Flag voltage	V_{FLAG}	-0.3 to 6			V
Output current	I_{OUT}	DC	3.0		A
		Pulse	4.0	(Note 1)	
Power dissipation	P_D	1.65		(Note 2)	W
Operating temperature range	T_{opr}	−40 to 85			°C
Junction temperature	Tj	150			°C
Storage temperature	T_{stg}	−55 to 150			°C

Note: Using continuously under heavy loads (e.g. the application of high temperature/current/voltage and the significant change in temperature, etc.) may cause this product to decrease in the reliability significantly even if the operating conditions (i.e. operating temperature/current/voltage, etc.) are within the absolute maximum ratings. Please design the appropriate reliability upon reviewing the Toshiba Semiconductor Reliability Handbook (“Handling Precautions”/“Derating Concept and Methods”) and individual reliability data (i.e. reliability test report and estimated failure rate, etc).

Note1: 1 ms pulse, 1% duty cycle

Note2: Rating at mounting on a board: FR4 board. (40 mm × 40 mm × 1.6 mm, Cu 4 layer)

Pin Assignment (Top view/Bottom bump)

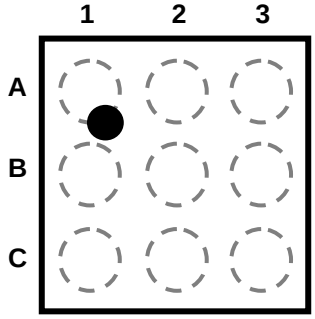

	1	2	3
A	FLAG	V_{CT}	$\overline{CE}$
B	V_{IN}	GND	V_{OUT}
C	V_{IN}	GND	V_{OUT}

Product list

Part number	Over voltage lockout	$\overline{CE}$ function	VCT function	VCT resistance
TCK305G	10.5 V (Typ.)	Active Low	Active Low	Pull down

Please ask your local retailer about the devices with other OVLO, logic function and pull down resistance.

Block Diagram

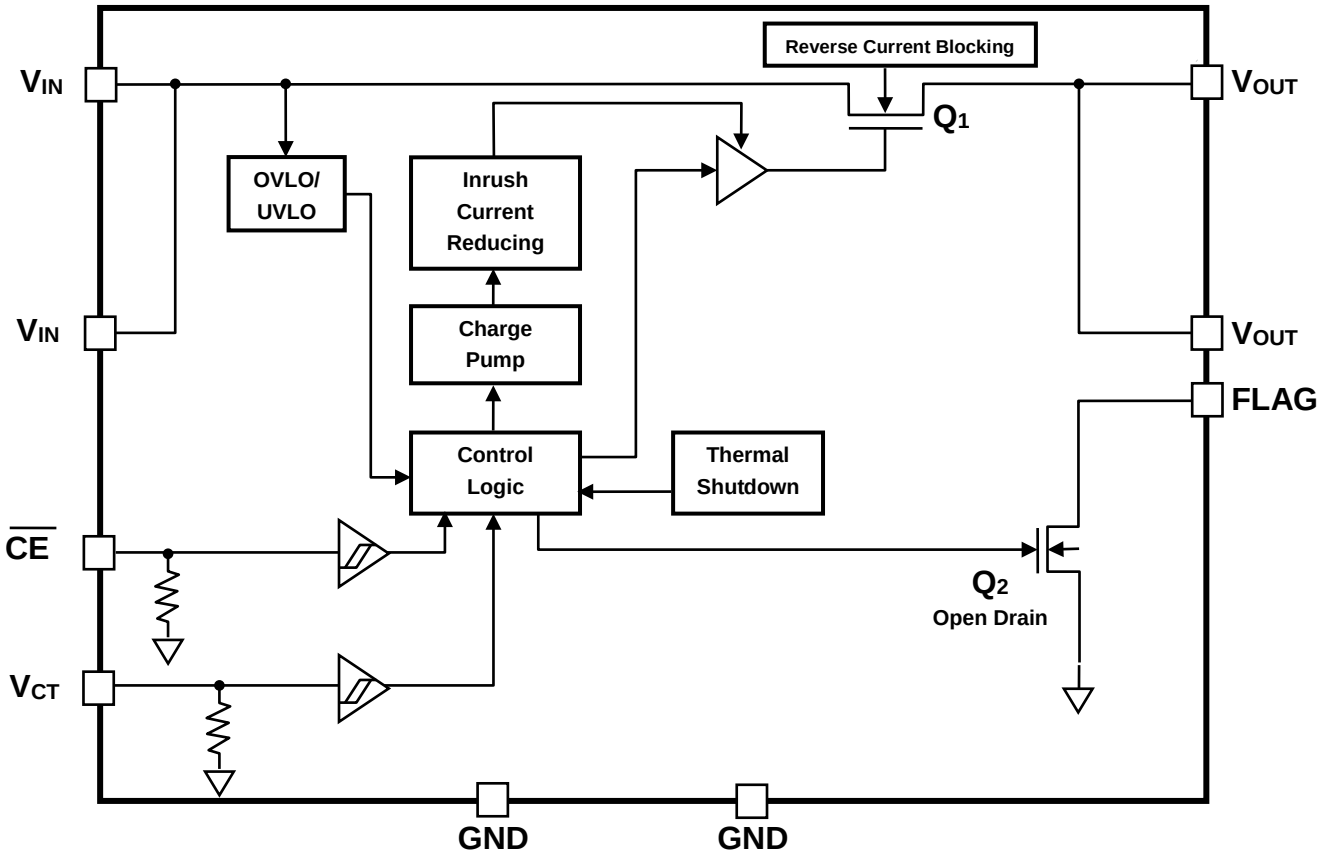

PIN Description

PIN	Name	Description
A1	FLAG	Open drain acknowledge signal output. When input voltage is in regular range (V_{UVL} < V_{IN} < V_{OVL}), Q_2 turn ON. FLAG output turn to be high impedance in irregular input voltage range, $\overline{CE}$ High state and thermal shutdown operation.
A2	V_{CT}	Switch Control function. It is internally connected to GND (Pull down).
A3	$\overline{CE}$	Chip Enable function. It is internally connected to GND(Pull down)
B1, C1	V_{IN}	Input. It has Over Voltage Lock Out (OVLO) and Under Voltage Lock Out function (UVLO).
B2, C2	GND	Ground
B3, C3	V_{OUT}	Output.

Operation Logic Table

TCK305G

		$\overline{CE}$ "Low"	$\overline{CE}$ " High"
V_{CT} "HIGH"	Q_1 (Main Switch)	OFF	OFF
	Q_2 (FLAG out)	ON (When V_{UVL} < V_{IN} < V_{OVL}), OFF (When V_{UVL} > V_{IN}, or V_{IN} > V_{OVL}), OFF (Thermal shut down = active)	OFF
	Reverse current block	Active	Active
V_{CT} "LOW"	Q_1 (Main Switch)	ON	OFF
	Q_2 (FLAG out)	ON (When V_{UVL} < V_{IN} < V_{OVL}), OFF (When V_{UVL} > V_{IN}, or V_{IN} > V_{OVL}), OFF (Thermal shut down = active)	OFF
	Reverse current block	Disable	Active

DC Characteristics (Ta = -40 to 85°C)

Characteristics	Symbol	Test Condition	Ta = 25°C			Ta = −40 to 85°C		Unit
			Min	Typ.	Max	Min	Max	
Input voltage	V_{IN}	—	2.3	—	28	2.3	28	V
$\overline{CE}$,V_{CT} High-level input voltage	V_{IH}	V_{IN} = 2.3 to 28 V	1.6	—	—	1.6	—	V
$\overline{CE}$,V_{CT} Low-level input voltage	V_{IL}	V_{IN} = 2.3 to 28 V	—	—	0.3	—	0.3	V
Over voltage lock out (OVLO) rising threshold	V_{OVL_RI}	—	—	10.5	—	9.1	11.9	V
Over voltage lock out (OVLO) falling threshold	V_{OVL_FA}	—	—	V_{OVL_RI} - 0.5	—	—	—	V
Under voltage lock out (UVLO) rising threshold	V_{UVL_RI}	—	—	2.9	—	2.3	3.5	V
Under voltage lock out (UVLO) falling threshold	V_{UVL_FA}	—	—	V_{UVL_RI} - 0.3	—	—	—	V
Quiescent current (ON state)	$I_{Q(ON)}$	$\overline{CE}$ = Open, V_{CT} = Open I_{OUT} = 0 mA, V_{IN} = 5.0 V	—	130	—	—	190	μA
Quiescent current (OFF state)	$I_{Q(OFF1)}$	$\overline{CE}$ = 0 V, V_{CT} = 3.0 V, V_{IN} = 5.0 V, V_{OUT} = 0 V	—	75	—	—	115	μA
Input Shutdown Current	$I_{Q(OFF2)}$	$\overline{CE}$ = 3.0 V, V_{CT} = Open, V_{IN} = 5.0 V, V_{OUT} = 0 V	—	1.3	—	—	10	μA
Switch OFF state current	I_{OFF}	$\overline{CE}$ = 3.0 V, V_{CT} = Open, V_{IN} = Open, V_{OUT} = 5.0 V	—	0.1	—	—	1	μA
Reverse blocking current	I_{RB}	V_{OUT} = 5.0 V, V_{IN} = 0 V, V_{CT} = 3.0 V	—	0.1	—	—	10	μA
On resistance	R_{ON}	I_{OUT} = -1.0 A, V_{IN} = 4.5 V	—	73	—	—	140	mΩ
FLAG Leak current	I_{LEAK}	V_{IO} = 5.0 V	—	—	2	—	2	μA
FLAG Output low voltage	V_{OL}	I_{SINK} = 1 mA, V_{IO} = 5.0 V	—	—	0.4	—	0.4	V
$\overline{CE}$ built-in resistance	R_{CE}	—	—	530	—	—	—	kΩ
V_{CT} built-in resistance	R_{VCT}	—	—	530	—	—	—	

AC Characteristics (Ta = 25°C)

Characteristics	Symbol	Test Condition (Figure 1, 2)	Min	Typ.	Max	Unit
Hold time	t_{HD}	V_{UVL} < V_{IN}(5 V) < V_{OVL}, R_L = 50 Ω Initial start up V_{OUT} off state to charge-pump on state	—	15	—	ms
V_{OUT} OVP off time	t_{OVP}	V_{IN} >V_{OVLO_RI} , V_{IN} rising = 2 V/μs, R_L = 50 Ω, V_{OUT} to 80% of V_{OVLO_RI}	—	3	—	μs
V_{OUT} off time	t_{OFF}	V_{UVL} < V_{IN} (5 V) < V_{OVL}, R_L = 50 Ω, V_{OUT} to 80% of V_{IN}	—	2	—	μs
V_{OUT} rise time	t_r	V_{IN}= 5.0 V , R_L = 50 Ω , C_L=1.0 uF	—	2	—	ms
V_{OUT} fall time	t_f	V_{IN}= 5.0 V , R_L = 50 Ω , C_L=1.0 uF	—	0.12	—	ms
V_{CT} delay time (Enable to Disable)	t_{CT1}	V_{IN}= 5.0 V , R_L = 50 Ω	—	0.5	—	μs
V_{CT} delay time (Disable to Enable)	t_{CT2}	V_{IN}= 5.0 V , R_L = 50 Ω	—	3.2	—	ms

Timing chart

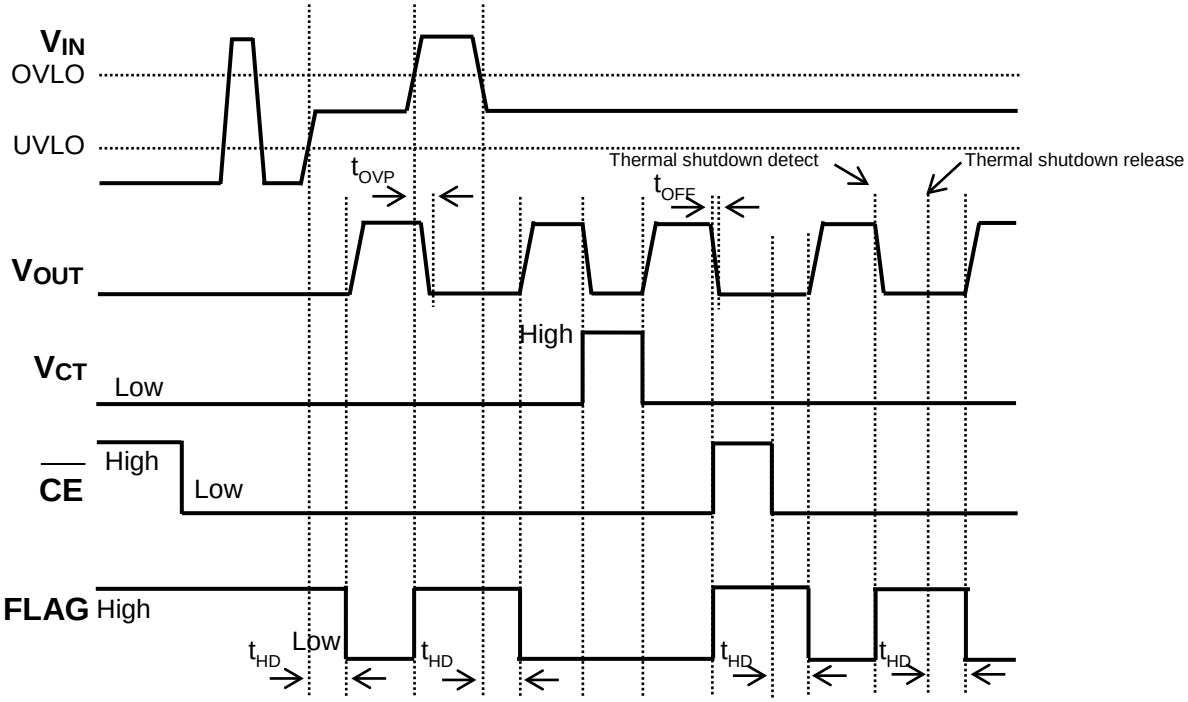

Figure 1: t_{HD}, t_{OVP}, t_{OFF}

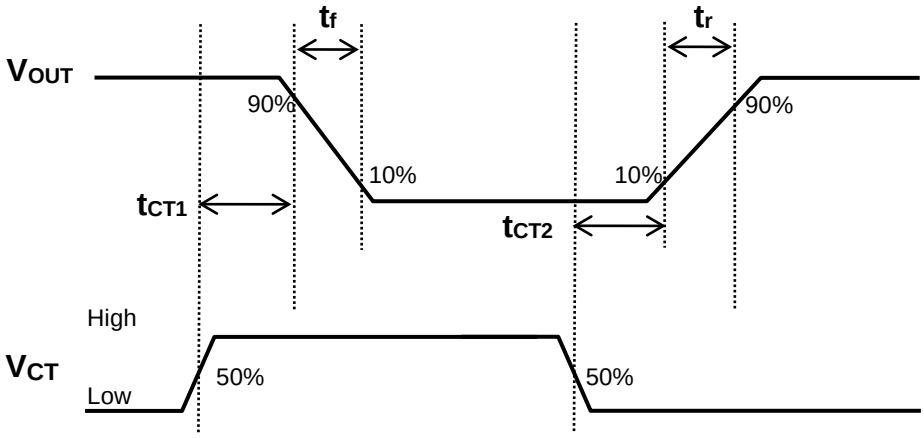

Figure 2: t_r, t_f, t_{CT}

Application Note

1. Application circuit example (top view)

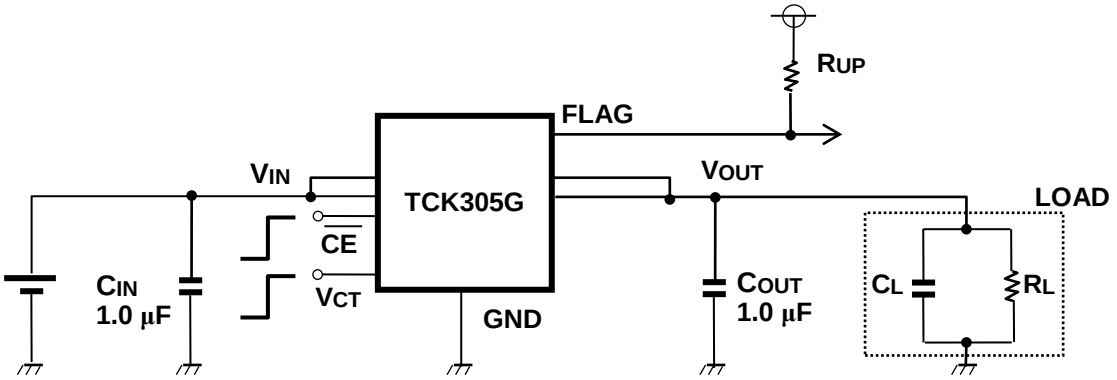

1) Input and Output capacitor

An input capacitor (C_{IN}) and an output capacitor (C_{OUT}) are necessary for the stable operation of TCK305G. And it is effective to reduce voltage overshoot or undershoot due to sharp changes in output current and also for improved stability of the power supply. When used, place C_{IN} and C_{OUT} more than 1.0μF as close to V_{IN} pin to improve stability of the power supply.

2) Control pin

Control pins for TCK305G is operated by the control voltage and Schmitt trigger. It can be used even if the control voltage is higher than the input voltage.

2. Reverse current blocking

Reverse current blocking (SW OFF state) function is designed in these products. This function is active at output n-ch MOSEFT turned off.

However these does not assure for the suppression of uprising device operation. In use of these products, please read through and understand dissipation idea for absolute maximum ratings from the above mention or our ‘Semiconductor Reliability Handbook’. Then use these products under absolute maximum ratings in any condition. Furthermore, Toshiba recommend inserting failsafe system into the design.

3. Thermal shut down function

Thermal shutdown function is designed in these products, but these does not assure for the suppression of uprising device operation. In use of these products, please read through and understand dissipation idea for absolute maximum ratings from the above mention or our ‘Semiconductor Reliability Handbook’. Then use these products under absolute maximum ratings in any condition. Furthermore, Toshiba recommend inserting failsafe system into the design.

4. Power Dissipation

Board-mounted power dissipation ratings for TCK305G are available in the Absolute Maximum Ratings table.
Power dissipation is measured on the board condition shown below.

[The Board Condition]
Board material: Glass epoxy (FR4)
Board dimension: 40 mm x 40 mm (Cu 4 layer)

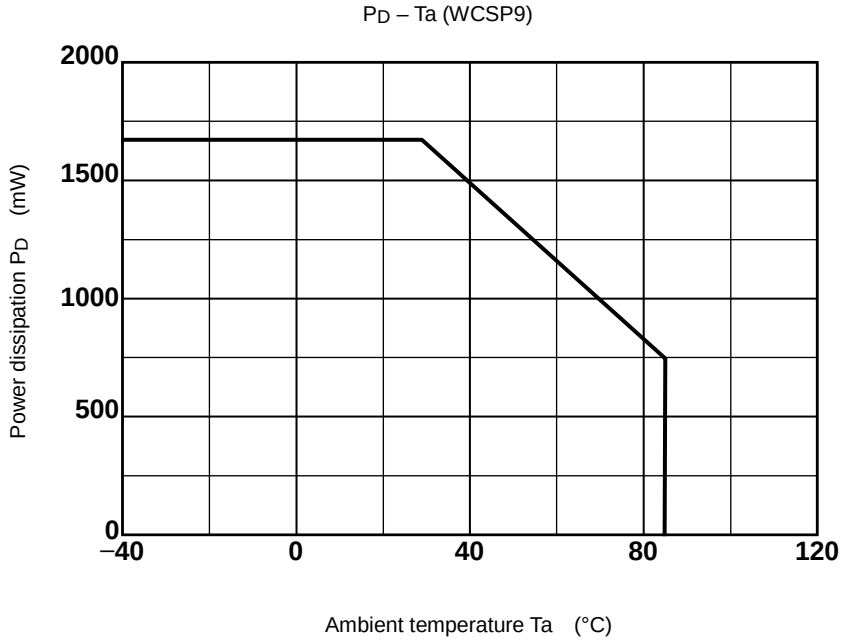

Please allow sufficient margin when designing a board pattern to fit the expected power dissipation. Also take into consideration the ambient temperature, input voltage, output current etc and applying the appropriate derating for allowable power dissipation during operation.

Representative Typical Characteristics

1) ON resistance

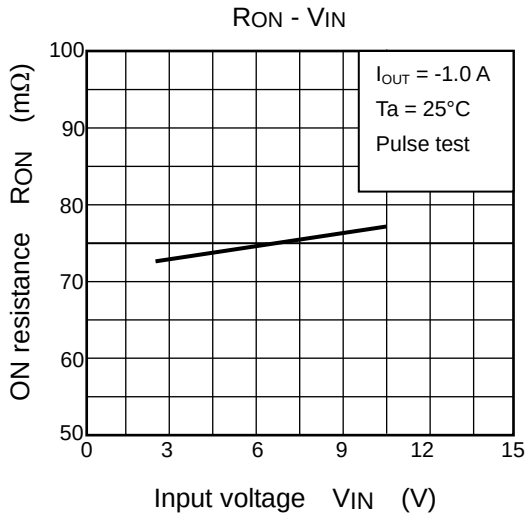

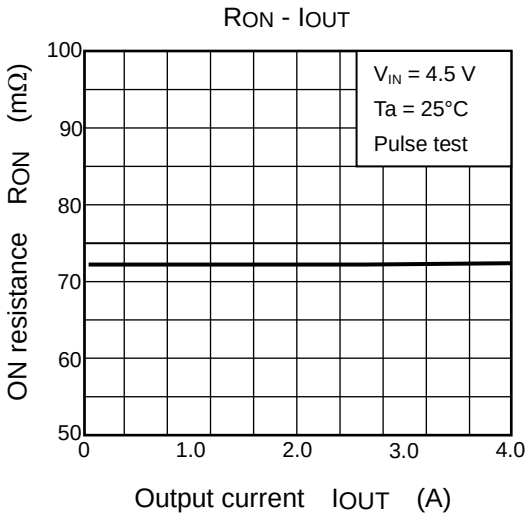

2) Quiescent current

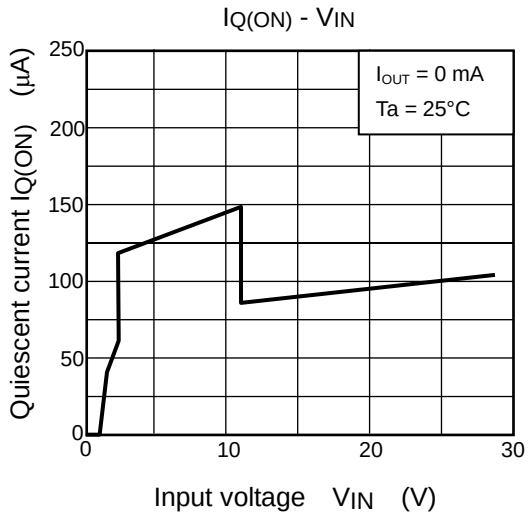

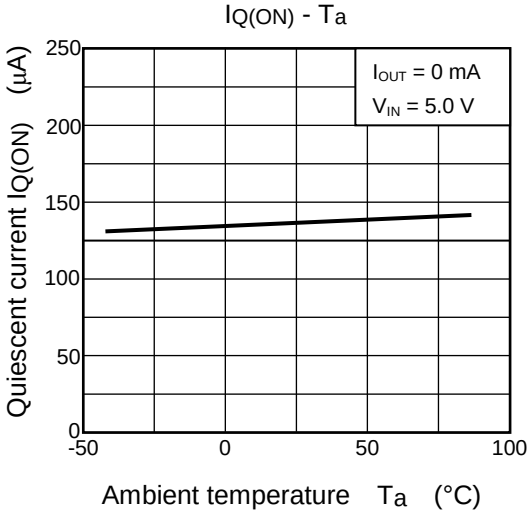

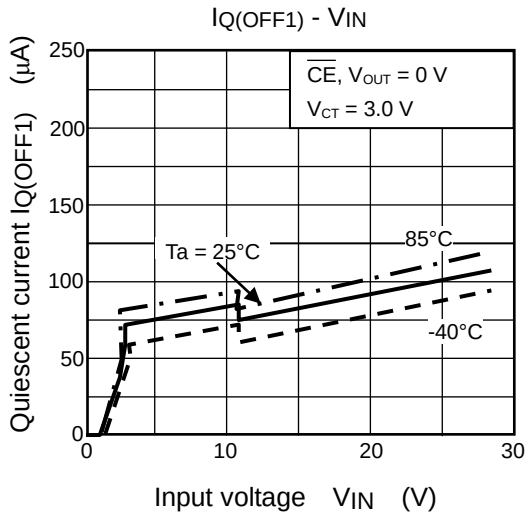

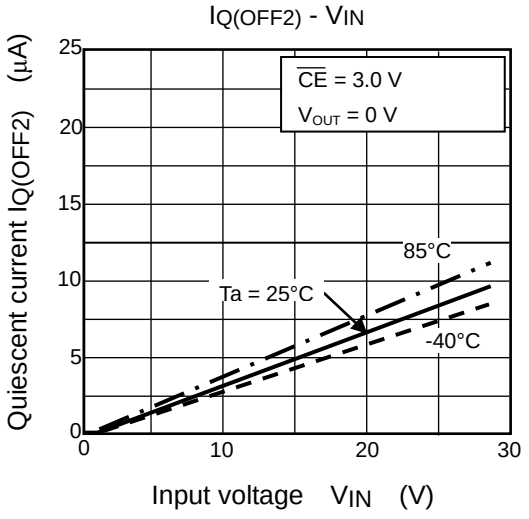

Package Dimensions

WCSP9 Unit: mm

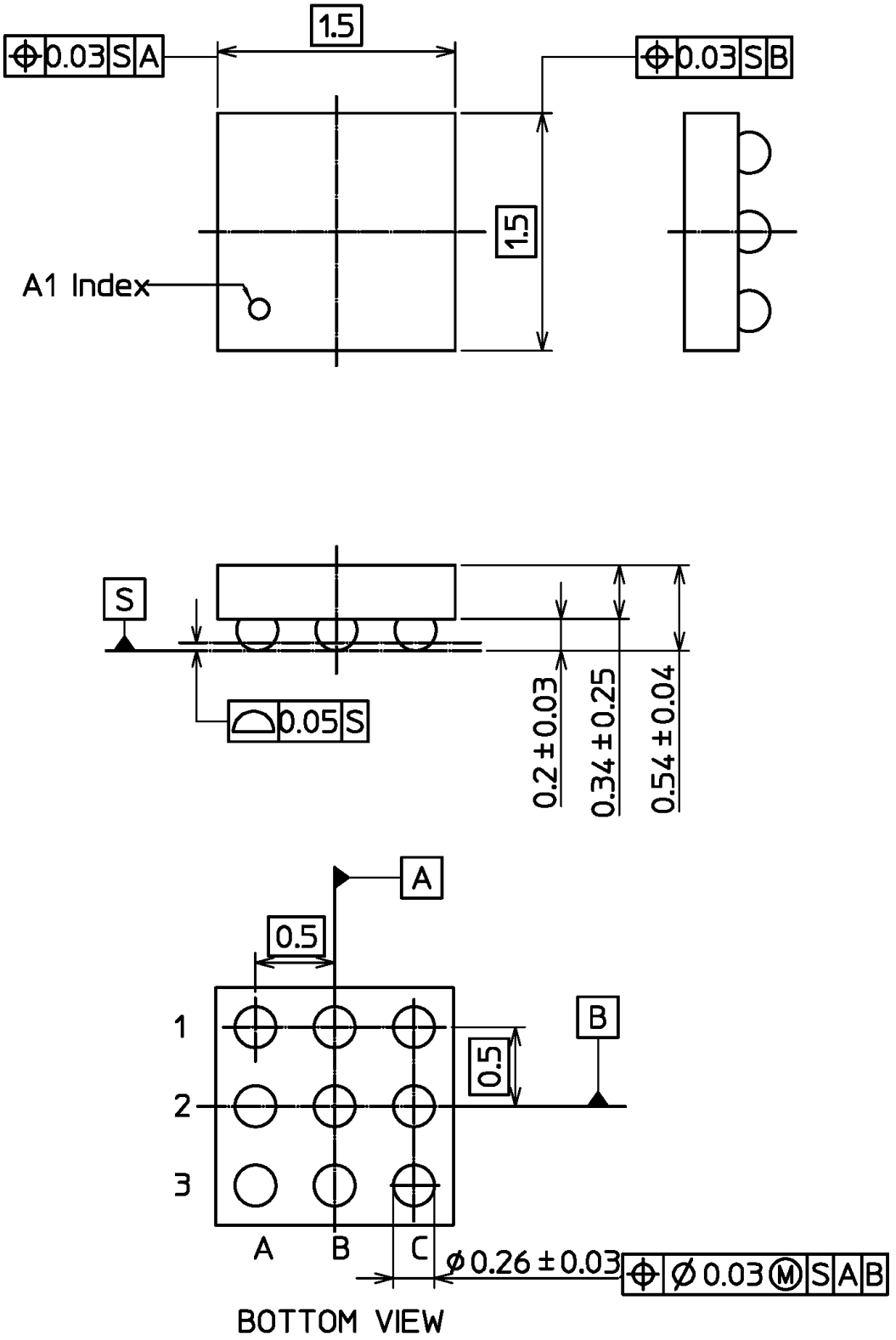

Weight : 3.5 mg (Typ.)

Land pattern dimensions (for reference only)

Unit: mm

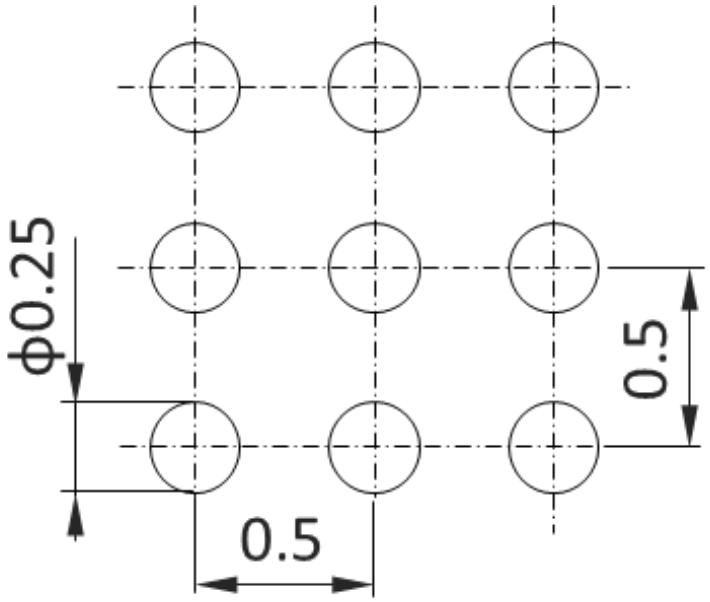

RESTRICTIONS ON PRODUCT USE

- Toshiba Corporation, and its subsidiaries and affiliates (collectively "TOSHIBA"), reserve the right to make changes to the information in this document, and related hardware, software and systems (collectively "Product") without notice.
- This document and any information herein may not be reproduced without prior written permission from TOSHIBA. Even with TOSHIBA's written permission, reproduction is permissible only if reproduction is without alteration/omission.
- Though TOSHIBA works continually to improve Product's quality and reliability, Product can malfunction or fail. Customers are responsible for complying with safety standards and for providing adequate designs and safeguards for their hardware, software and systems which minimize risk and avoid situations in which a malfunction or failure of Product could cause loss of human life, bodily injury or damage to property, including data loss or corruption. Before customers use the Product, create designs including the Product, or incorporate the Product into their own applications, customers must also refer to and comply with (a) the latest versions of all relevant TOSHIBA information, including without limitation, this document, the specifications, the data sheets and application notes for Product and the precautions and conditions set forth in the "TOSHIBA Semiconductor Reliability Handbook" and (b) the instructions for the application with which the Product will be used with or for. Customers are solely responsible for all aspects of their own product design or applications, including but not limited to (a) determining the appropriateness of the use of this Product in such design or applications; (b) evaluating and determining the applicability of any information contained in this document, or in charts, diagrams, programs, algorithms, sample application circuits, or any other referenced documents; and (c) validating all operating parameters for such designs and applications. **TOSHIBA ASSUMES NO LIABILITY FOR CUSTOMERS' PRODUCT DESIGN OR APPLICATIONS.**
- **PRODUCT IS NEITHER INTENDED NOR WARRANTED FOR USE IN EQUIPMENTS OR SYSTEMS THAT REQUIRE EXTRAORDINARILY HIGH LEVELS OF QUALITY AND/OR RELIABILITY, AND/OR A MALFUNCTION OR FAILURE OF WHICH MAY CAUSE LOSS OF HUMAN LIFE, BODILY INJURY, SERIOUS PROPERTY DAMAGE AND/OR SERIOUS PUBLIC IMPACT ("UNINTENDED USE"). ** Except for specific applications as expressly stated in this document, Unintended Use includes, without limitation, equipment used in nuclear facilities, equipment used in the aerospace industry, medical equipment, equipment used for automobiles, trains, ships and other transportation, traffic signaling equipment, equipment used to control combustions or explosions, safety devices, elevators and escalators, devices related to electric power, and equipment used in finance-related fields. **IF YOU USE PRODUCT FOR UNINTENDED USE, TOSHIBA ASSUMES NO LIABILITY FOR PRODUCT.** For details, please contact your TOSHIBA sales representative.
- Do not disassemble, analyze, reverse-engineer, alter, modify, translate or copy Product, whether in whole or in part.
- Product shall not be used for or incorporated into any products or systems whose manufacture, use, or sale is prohibited under any applicable laws or regulations.
- The information contained herein is presented only as guidance for Product use. No responsibility is assumed by TOSHIBA for any infringement of patents or any other intellectual property rights of third parties that may result from the use of Product. No license to any intellectual property right is granted by this document, whether express or implied, by estoppel or otherwise.
- **ABSENT A WRITTEN SIGNED AGREEMENT, EXCEPT AS PROVIDED IN THE RELEVANT TERMS AND CONDITIONS OF SALE FOR PRODUCT, AND TO THE MAXIMUM EXTENT ALLOWABLE BY LAW, TOSHIBA (1) ASSUMES NO LIABILITY WHATSOEVER, INCLUDING WITHOUT LIMITATION, INDIRECT, CONSEQUENTIAL, SPECIAL, OR INCIDENTAL DAMAGES OR LOSS, INCLUDING WITHOUT LIMITATION, LOSS OF PROFITS, LOSS OF OPPORTUNITIES, BUSINESS INTERRUPTION AND LOSS OF DATA, AND (2) DISCLAIMS ANY AND ALL EXPRESS OR IMPLIED WARRANTIES AND CONDITIONS RELATED TO SALE, USE OF PRODUCT, OR INFORMATION, INCLUDING WARRANTIES OR CONDITIONS OF MERCHANTABILITY, FITNESS FOR A PARTICULAR PURPOSE, ACCURACY OF INFORMATION, OR NONINFRINGEMENT.**
- Do not use or otherwise make available Product or related software or technology for any military purposes, including without limitation, for the design, development, use, stockpiling or manufacturing of nuclear, chemical, or biological weapons or missile technology products (mass destruction weapons). Product and related software and technology may be controlled under the applicable export laws and regulations including, without limitation, the Japanese Foreign Exchange and Foreign Trade Law and the U.S. Export Administration Regulations. Export and re-export of Product or related software or technology are strictly prohibited except in compliance with all applicable export laws and regulations.
- Please contact your TOSHIBA sales representative for details as to environmental matters such as the RoHS compatibility of Product. Please use Product in compliance with all applicable laws and regulations that regulate the inclusion or use of controlled substances, including without limitation, the EU RoHS Directive. **TOSHIBA ASSUMES NO LIABILITY FOR DAMAGES OR LOSSES OCCURRING AS A RESULT OF NONCOMPLIANCE WITH APPLICABLE LAWS AND REGULATIONS.**