Optocoupler, Phototransistor Output

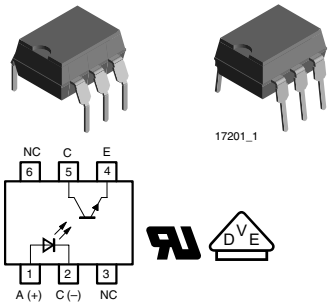

DESCRIPTION

The TCDT1110/TCDT1110G consists of a phototransistor optically coupled to a gallium arsenide infrared-emitting diode in a 6 pin plastic dual inline package. The elements provide a fixed distance between input and output for highest safety requirements.

VDE STANDARDS

These couplers perform safety functions according to the following equipment standards:

- **DIN EN 60747-5-5**
  Optocoupler for electrical safety requirements
- **IEC 60950/EN 60950**
  Office machines (applied for reinforced isolation for mains voltage ≤ 400 V_{RMS})
- **VDE 0804**
  Telecommunication apparatus and data processing
- **IEC 60065**
  Safety for mains-operated electronic and related household apparatus

FEATURES

- Extra low coupling capacity - typical 0.2 pF
- High Common Mode Rejection
- Low temperature coefficient of CTR
- Base not connected
- Lead (Pb)-free component
- Component in accordance to RoHS 2002/95/EC and WEEE 2002/96/EC

APPLICATIONS

- Switch-mode power supplies
- Line receiver
- Computer peripheral interface
- Microprocessor system interface
- Circuits for safe protective separation against electrical shock according to safety class II (reinforced isolation):
  - For appl. class I - IV at mains voltage ≤ 300 V
  - For appl. class I - III at mains voltage ≤ 600 V
  according DIN EN 60747-5-5.

AGENCY APPROVALS

- UL1577, File No. E76222 System Code A, Double Protection
- BSI IEC 60950; IEC 60065
- DIN EN 60747-5-5 pending
- FIMKO

ORDER INFORMATION	
PART	**REMARKS**
TCDT1110	CTR > 100 %, DIP-6
TCDT1110G	CTR > 100 %, DIP-6

Note
G = Leadform 10.16 mm; G is not marked on the body.

ABSOLUTE MAXIMUM RATINGS (1)				
PARAMETER	**TEST CONDITION**	**SYMBOL**	**VALUE**	**UNIT**
INPUT				
Reverse voltage		V_R	6	V
Forward current		I_F	60	mA
Forward surge current	$t_p/T \leq 10\ \mu s$	I_{FSM}	3	A
Power dissipation		P_{diss}	100	mW
Junction temperature		T_j	125	°C

ABSOLUTE MAXIMUM RATINGS (1)

PARAMETER	TEST CONDITION	SYMBOL	VALUE	UNIT
OUTPUT				
Collector emitter voltage		V_{CEO}	70	V
Emitter collector voltage		V_{ECO}	7	V
Collector current		I_C	50	mA
Collector peak current	$t_p/T = 0.5$, $t_p \leq 10$ ms	I_{CM}	100	mA
Power dissipation		P_{diss}	150	mW
Junction temperature		T_j	125	°C
COUPLER				
Isolation test voltage (RMS)	t = 1 min	V_{ISO}	5300	V_{RMS}
Total power dissipation		P_{tot}	250	mw
Ambient temperature range		T_{amb}	- 55 to + 100	°C
Storage temperature range		T_{stg}	- 55 to + 125	°C
Soldering temperature (2)	2 mm from case t ≤ 10 s	T_{sld}	260	°C

Notes

(1) T_{amb} = 25 °C unless otherwise specified. Stresses in excess of the absolute maximum ratings can cause permanent damage to the device. Functional operation of the device is not implied at these or any other conditions in excess of those given in the operational sections of this document. Exposure to absolute maximum ratings for extended periods of the time can adversely affect reliability.

(2) Refer to wave profile for soldering conditions for through hole devices.

ELECTRICAL CHARACTERISTICS

PARAMETER	TEST CONDITION	SYMBOL	MIN.	TYP.	MAX.	UNIT
INPUT						
Forward voltage	I_F = 50 mA	V_F		1.2	1.5	V
Junction capacitance	V_R = 0, f = 1 MHz	C_j		50		pF
OUTPUT						
Collector emitter voltage	I_C = 1 mA	V_{CEO}	70			V
Emitter collector voltage	I_E = 100 µA	V_{ECO}	7			V
Collector-emitter cut-off current	V_{CE} = 30 V, I_F = 0	I_{CEO}			150	nA
COUPLER						
Collector emitter saturation voltage	I_F = 10 mA, I_C = 0.5 mA	V_{CEsat}			0.3	V
Cut-off frequency	V_{CE} = 5 V, I_F = 10 mA, R_L = 1 Ω	f_c		110		kHz
Coupling capacitance	f = 1 MHz	C_k		0.3		pF

Note

T_{amb} = 25 °C unless otherwise specified.
Minimum and maximum values are testing requirements. Typical values are characteristics of the device and are the result of engineering evaluation. Typical values are for information only and are not part of the testing requirements.

CURRENT TRANSFER RATIO

PARAMETER	TEST CONDITION	SYMBOL	MIN.	TYP.	MAX.	UNIT
I_C/I_F	V_{CE} = 20 V, I_F = 10 mA	CTR	100			%

MAXIMUM SAFETY RATINGS

PARAMETER	TEST CONDITION	SYMBOL	MIN.	TYP.	MAX.	UNIT
INPUT						
Forward current		I_F			130	mA
OUTPUT						
Power dissipation		P_{diss}			265	mW
COUPLER						
Rated impulse voltage		V_{IOTM}			6	kV
Safety temperature		T_{si}			150	°C

Note

According to DIN EN 60747-5-5 see figure 1. This optocoupler is suitable for safe electrical isolation only within the safety ratings. Compliance with the safety ratings shall be ensured by means of suitable protective circuits.

INSULATION RATED PARAMETERS						
PARAMETER	**TEST CONDITION**	**SYMBOL**	**MIN.**	**TYP.**	**MAX.**	**UNIT**
Partial discharge test voltage - routine test	100 %, t_{test} = 1 s	V_{pd}	1.6			kV
Partial discharge test voltage - lot test (sample test)	t_{Tr} = 60 s, t_{test} = 10 s, (see figure 2)	V_{IOTM}	6			kV
		V_{pd}	1.3			kV
Insulation resistance	V_{IO} = 500 V	R_{IO}	10^{12}			Ω
	V_{IO} = 500 V, T_{amb} = 100 °C	R_{IO}	10^{11}			Ω
	V_{IO} = 500 V, T_{amb} = 200 °C (construction test only)	R_{IO}	10^{9}			Ω

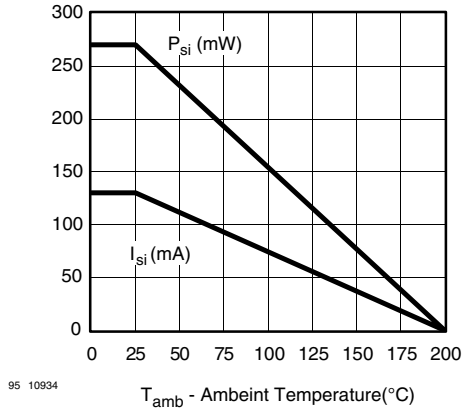

Fig. 3 - Derating diagram

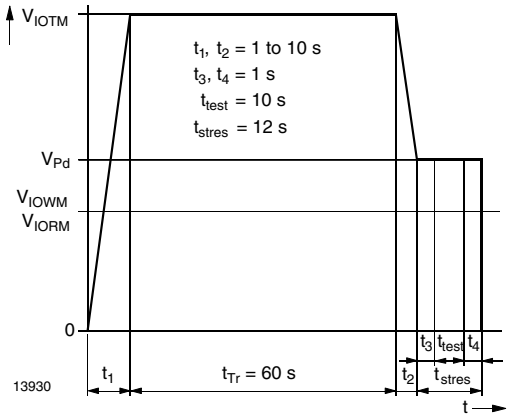

Fig. 4 - Test Pulse Diagram for Sample Test According to DIN EN 60747-5-5/DIN EN 60747-; IEC 60747

SWITCHING CHARACTERISTICS						
PARAMETER	**TEST CONDITION**	**SYMBOL**	**MIN.**	**TYP.**	**MAX.**	**UNIT**
Turn-off time	V_S = 10 V, I_C = 2 mA, R_L = 100 Ω (see figure 3)	t_{off}		15.0		µs
Turn-on time	V_S = 10 V, I_C = 2 mA, R_L = 100 Ω (see figure 3)	t_{on}		15.0		µs
Turn-off time	V_S = 10 V, I_F = 10 mA, R_L = 1 kΩ (see figure 4)	t_{off}		18.0		µs
Turn-on time	V_S = 10 V, I_F = 10 mA, R_L = 1 kΩ (see figure 4)	t_{on}		9.0		µs

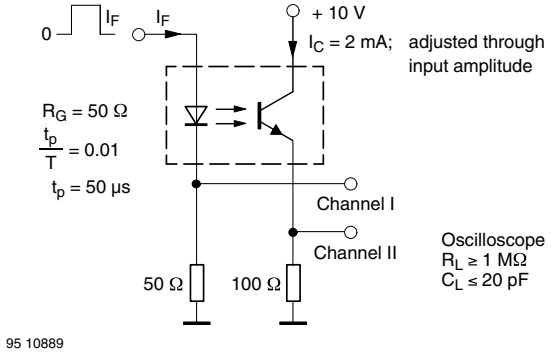

Fig. 5 - Test Circuit, Non-Saturated Operation

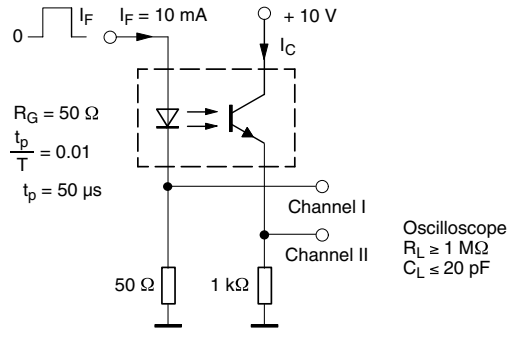

Fig. 6 - Test Circuit, Saturated Operation

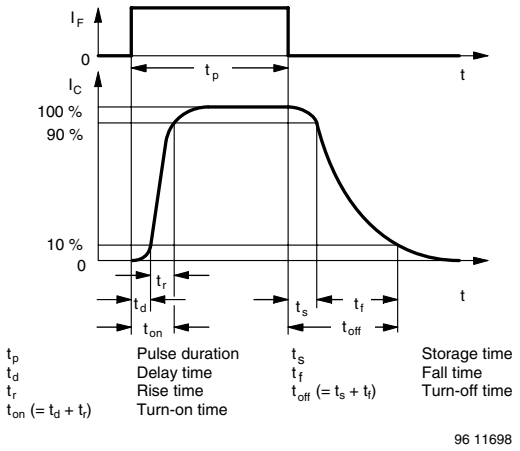

Fig. 7 - Switching Times

TYPICAL CHARACTERISTICS

T_{amb} = 25 °C, unless otherwise specified

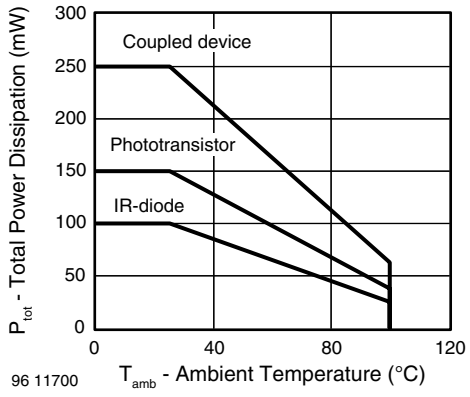

Fig. 8 - Total Power Dissipation vs. Ambient Temperature

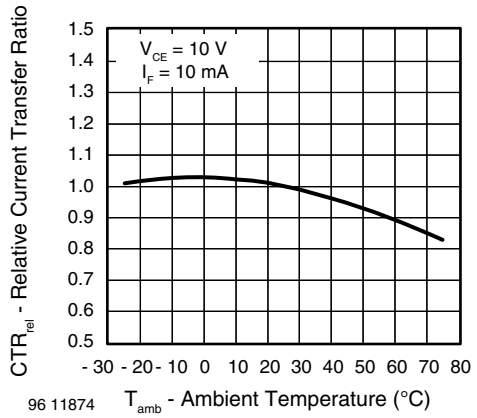

Fig. 10 - Relative Current Transfer Ratio vs. Ambient Temperature

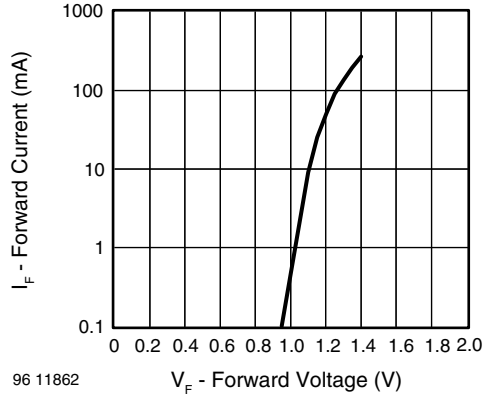

Fig. 9 - Forward Current vs. Forward Voltage

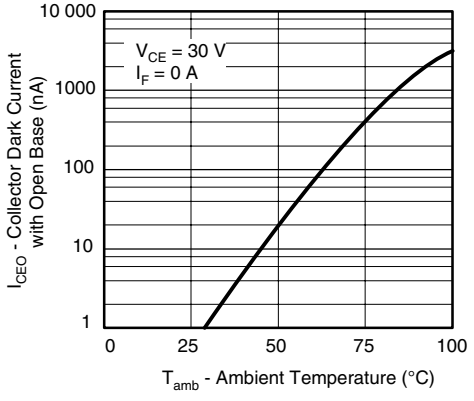

Fig. 11 - Collector Dark Current vs. Ambient Temperature

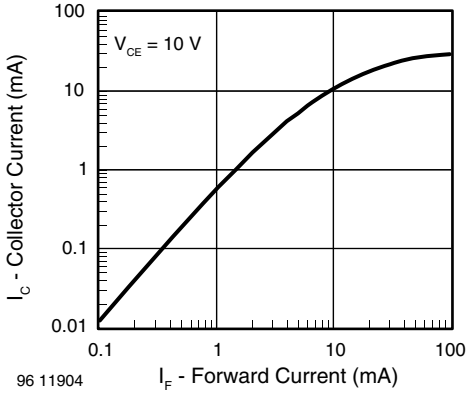

Fig. 12 - Collector Current vs. Forward Current

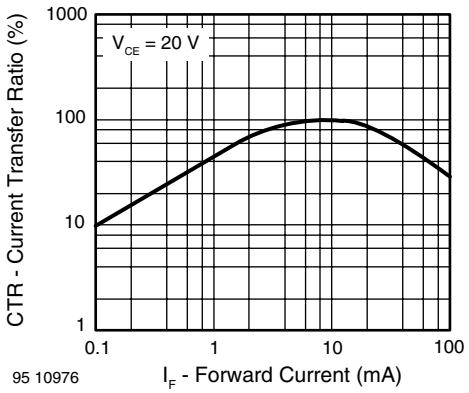

Fig. 15 - Current Transfer Ratio vs. Forward Current

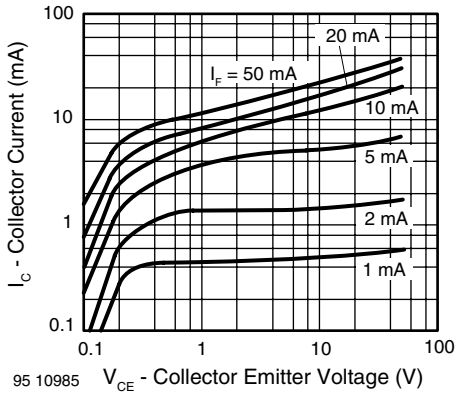

Fig. 13 - Collector Current vs. Collector Emitter Voltage

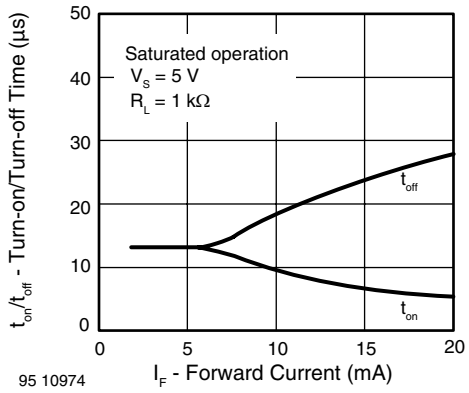

Fig. 16 - Turn-on/Turn-off Time vs. Forward Current

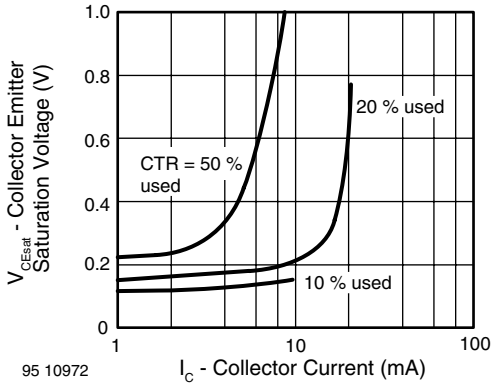

Fig. 14 - Collector Emitter Saturation Voltage vs. Collector Current

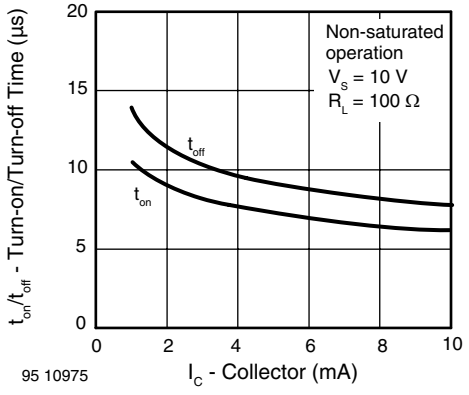

Fig. 17 - Turn-on/Turn-off Time vs. Collector Current

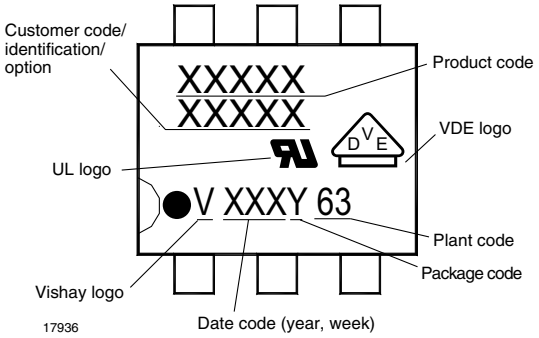

Fig. 18 - Marking example

PACKAGE DIMENSIONS in millimeters

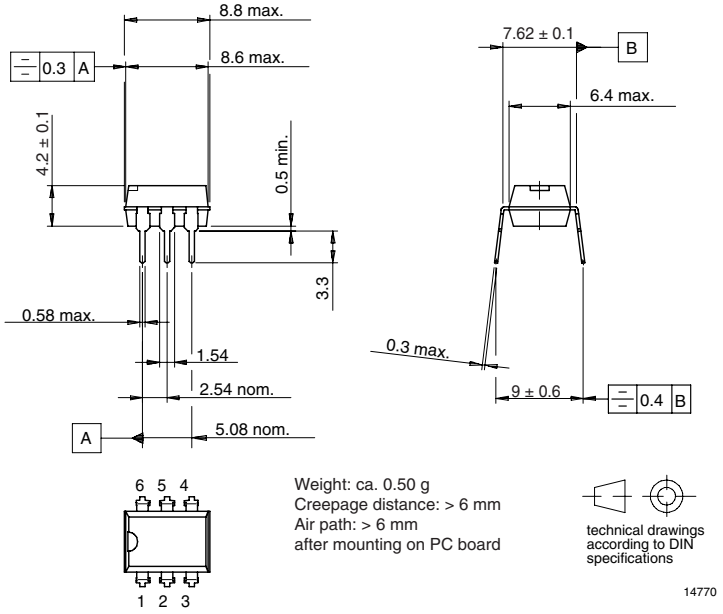

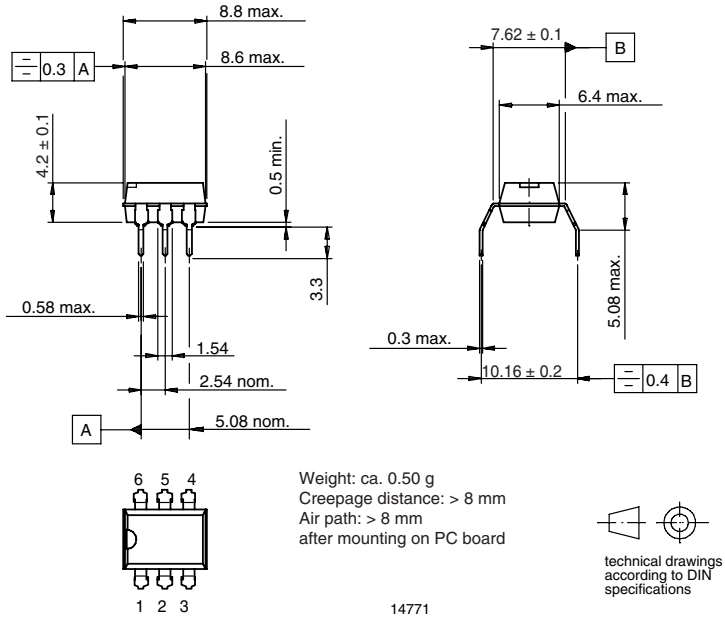

OZONE DEPLETING SUBSTANCES POLICY STATEMENT

It is the policy of Vishay Semiconductor GmbH to

1. Meet all present and future national and international statutory requirements.
2. Regularly and continuously improve the performance of our products, processes, distribution and operating systems with respect to their impact on the health and safety of our employees and the public, as well as their impact on the environment.

It is particular concern to control or eliminate releases of those substances into the atmosphere which are known as ozone depleting substances (ODSs).

The Montreal Protocol (1987) and its London Amendments (1990) intend to severely restrict the use of ODSs and forbid their use within the next ten years. Various national and international initiatives are pressing for an earlier ban on these substances.

Vishay Semiconductor GmbH has been able to use its policy of continuous improvements to eliminate the use of ODSs listed in the following documents.

1. Annex A, B and list of transitional substances of the Montreal Protocol and the London Amendments respectively.
2. Class I and II ozone depleting substances in the Clean Air Act Amendments of 1990 by the Environmental Protection Agency (EPA) in the USA.
3. Council Decision 88/540/EEC and 91/690/EEC Annex A, B and C (transitional substances) respectively.

Vishay Semiconductor GmbH can certify that our semiconductors are not manufactured with ozone depleting substances and do not contain such substances.

We reserve the right to make changes to improve technical design

and may do so without further notice.

Parameters can vary in different applications. All operating parameters must be validated for each customer application by the customer. Should the buyer use Vishay Semiconductors products for any unintended or unauthorized application, the buyer shall indemnify Vishay Semiconductors against all claims, costs, damages, and expenses, arising out of, directly or indirectly, any claim of personal damage, injury or death associated with such unintended or unauthorized use.

Notice

Specifications of the products displayed herein are subject to change without notice. Vishay Intertechnology, Inc., or anyone on its behalf, assumes no responsibility or liability for any errors or inaccuracies.

Information contained herein is intended to provide a product description only. No license, express or implied, by estoppel or otherwise, to any intellectual property rights is granted by this document. Except as provided in Vishay's terms and conditions of sale for such products, Vishay assumes no liability whatsoever, and disclaims any express or implied warranty, relating to sale and/or use of Vishay products including liability or warranties relating to fitness for a particular purpose, merchantability, or infringement of any patent, copyright, or other intellectual property right.

The products shown herein are not designed for use in medical, life-saving, or life-sustaining applications. Customers using or selling these products for use in such applications do so at their own risk and agree to fully indemnify Vishay for any damages resulting from such improper use or sale.