User's Guide
SLVUB32–March 2017

# TCA9802 I²C Buffer Evaluation Module

The TCA9802EVM evaluation module (EVM) allows the user to connect power to and buffer and translate I²C commands to the onboard slave device, TMP102. The EVM allows the designer to load and test different capacitive loading and has the option of replacing a series resistor with an inductor to emulate the parasitic inductance of cables. Parameters such as rise time, power consumption, and delay times can easily and accurately be evaluated. For additional details on I²C buffer performance, application notes, and the data sheet, see www.ti.com/I2C.

**Contents**


1 Introduction ..... 2
1.1 Overview ..... 2
1.2 EVM Features ..... 2
2 EVM Hardware Block Diagram and Images ..... 2
3 Hardware Description ..... 4
4 Layout ..... 9
4.1 Setup ..... 10
5 Operation ..... 11
6 Bill of Materials (BOM) ..... 12


**List of Figures**


1 TCA9802EVM Schematic ..... 3
2 TCA9802EVM Top Layout ..... 9
3 TCA9802EVM Bottom Layout ..... 9
4 Example: USB2ANY I²C Master Connected to the TCA9802EVM ..... 10
5 Vias Labeled on the TCA9802EVM ..... 11


**List of Tables**


1 Bill of Materials TCA9802EVM ..... 12


## Trademarks

All trademarks are the property of their respective owners.



Copyright © 2017, Texas Instruments Incorporated

# 1 Introduction

The TCA9802EVM allows designers to evaluate and compare device performance to enable fast selection of I$^2$C buffers and translators for their system. The TCA9802EVM contains the TCA9802 along with a linear regulator, TPS71701, and I$^2$C temperature sensors, TMP102. There are other buffers that can be ordered as samples but are not loaded with the EVM (TCA9800, TCA9801, TCA9803, or TCA9517A). This allows the designer to evaluate the entire family of devices along with competitor solutions.

## *1.1 Overview*

The TCA9802 is a dual-channel bidirectional buffer intended for I$^2$C bus and SMBus or PMBus systems. It provides bidirectional level shifting (up-translation and down-translation) between low voltages (down to 0.8 V) and higher voltages (1.65 V to 3.6 V). The TCA9802 features an internal current source on the B-side of the device, allowing the removal of external pull-up resistors on the B-side. The current source also provides an improved rise time and ultra-low power consumption.

## *1.2 EVM Features*

This EVM has the following features:

- $V_{CCA}$ input voltage range: 0.8 V to 3.6 V
- $V_{CCB}$ input voltage range: 1.65 V to 3.6 V
- Access to the $V_{CCA}$, $V_{CCB}$, OE, SDAA, SCLA, SDAB, and SCLB pins
- Onboard slave device, TMP102, that is programmed using jumpers
- Onboard $V_{CCB}$ regulator, TPS71701, that is programmed using a jumper
- Dual layout to allow for evaluating and comparing competitors or other TCA980x family of devices
- Footprints to test various capacitive loads and series inductance to emulate real-world parasitic affects

# 2 EVM Hardware Block Diagram and Images

The TCA9802EVM is an evaluation module for the Texas Instruments TCA9802 and TCA980x family of I$^2$C buffers. It provides basic functionality evaluation for the device. Figure 1 illustrates the EVM schematic.


Copyright © 2017, Texas Instruments Incorporated

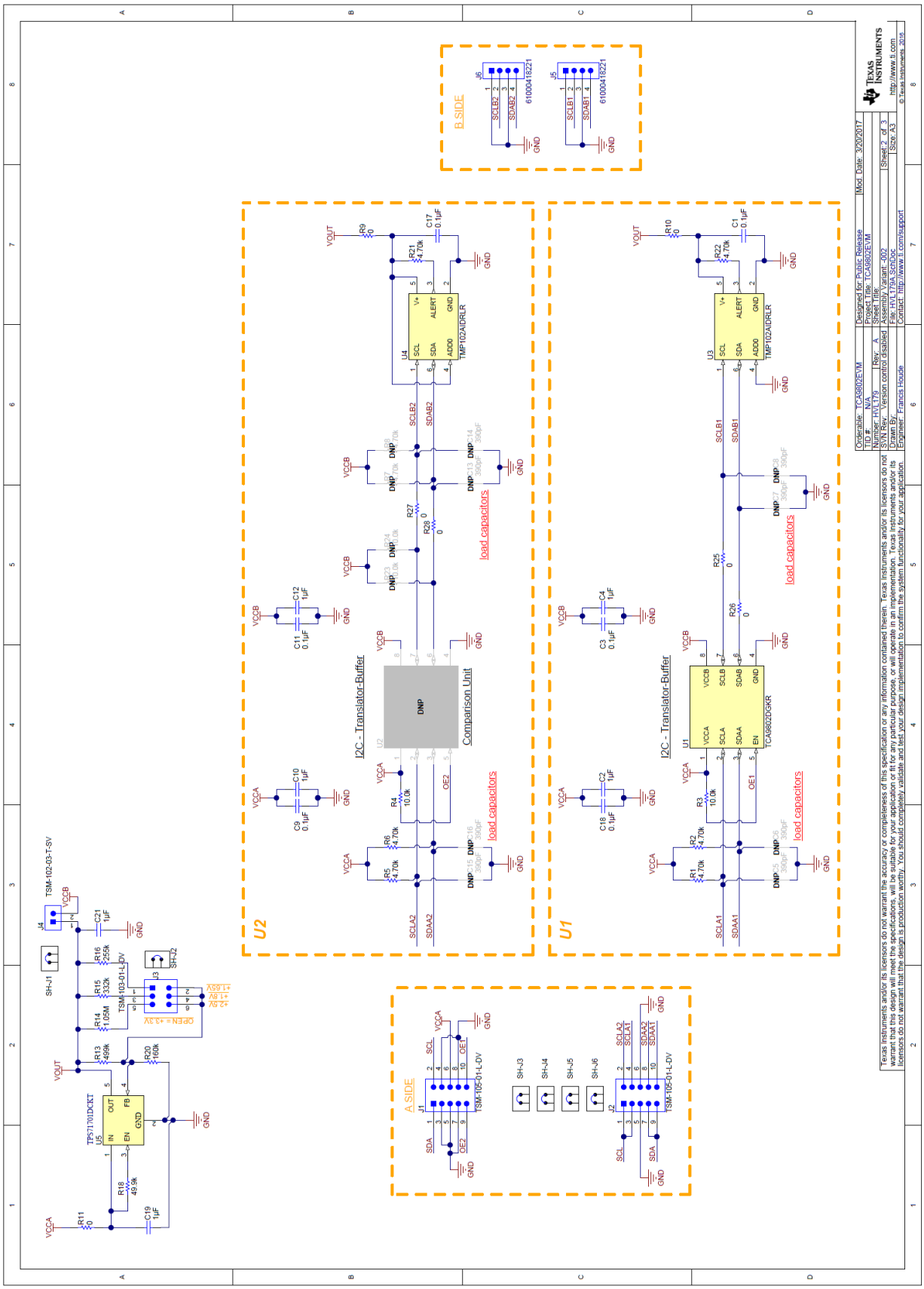


**Figure 1. TCA9802EVM Schematic**



Copyright © 2017, Texas Instruments Incorporated

## 3 Hardware Description

The TCA9802 EVM is designed to allow the user to easily evaluate the I²C buffer for a variety of conditions. The breakdown of all the features and design of the EVM follow:

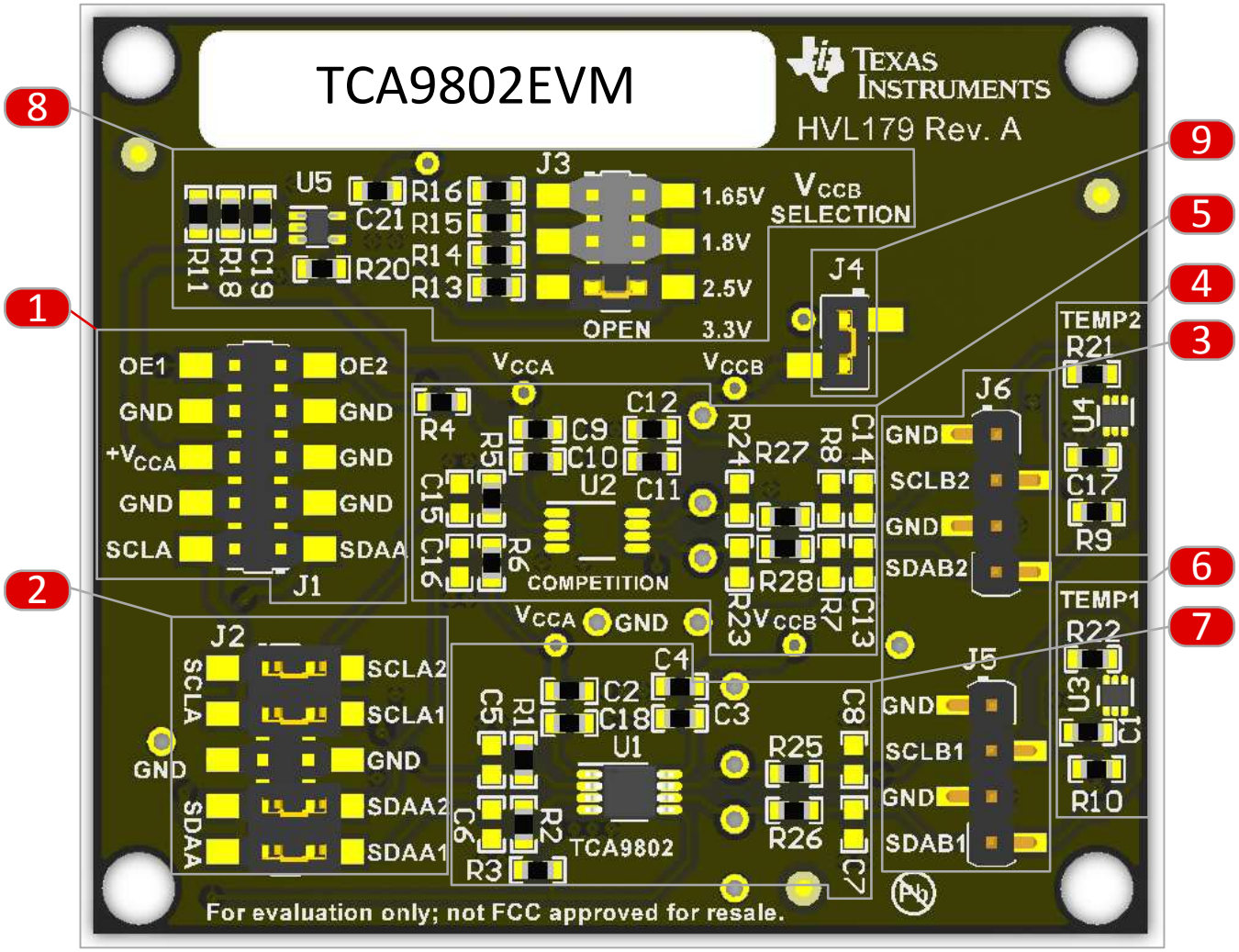


1

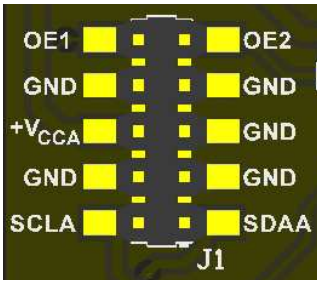


J1 is the connector designed to be mated with any I²C master via 0.100" headers. J1 allows for power connection ($+V_{CCA}$), ground connection, OE1 for U1, OE2 for U2, SDA, and SCL data lines. U2 is by default loaded with TCA9802. Connect $+V_{CCA}$ to the EVM using J1-6.



Copyright © 2017, Texas Instruments Incorporated

2

The J2 connector allows for either connecting only one device to SDAA or SCLA or to simultaneously connect to U1 and U2 devices to SDAA and SCLA.

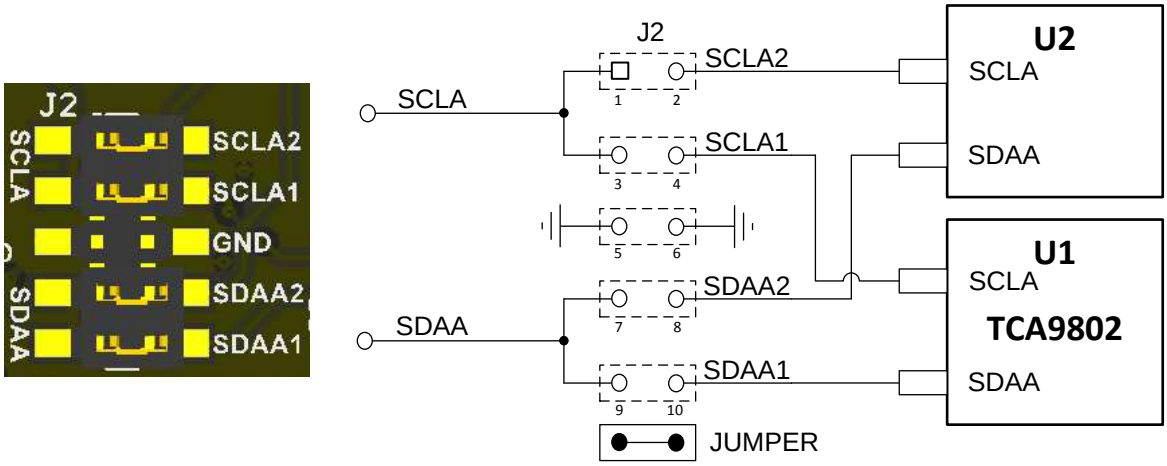


3

J5 and J6 are the connectors designed to evaluate the B side of the TCA9802. The J5 and J6 connector on the TCA9802EVM have pins that can be used to connect to external "Slave" connections for I$^2$C device. J5 and J6 allows for connection or the monitoring of SDAB, and SCLB data lines for either U1 or U2 to the onboard temperature sensors U3 and U4 (TMP102).

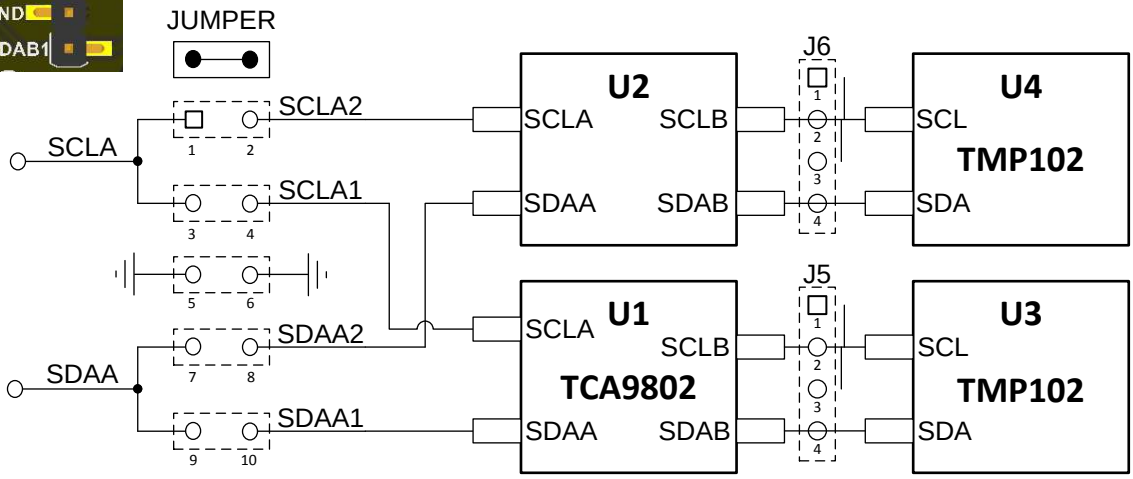



Copyright © 2017, Texas Instruments Incorporated

4

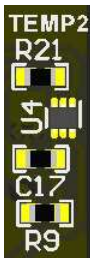


TEMP2 is the $I^2C$ controlled temperature sensor (TMP102) connected to the U2 device. The V+ of the temperature sensor is connected to $V_{OUT}$ of the TPS71701 linear regulator. Its $I^2C$ address is 0x49h.

5

U2 is the device that can be used to compare to the TCA9802, which is in the U1 location. U2 has the same layout as the U1 location, with the exception that the B side has pull resistor footprints to allow for comparison with the traditional $I^2C$ buffers such as the TCA9517, which require external pullups. There are also place holders for series resistors (R27 and R28) and capacitive loads (C13 and C14). R27 and R28 are by default 0-Ω resistors, but can be replaced with chip inductors, if the user wishes to emulate parasitic inductance. There are two sets of pullup resistors that can be loaded, but the default configuration is that neither are loaded, thus allowing for immediate testing of other TCA980x family devices. The two locations allow for testing of systems that have either the pullups close to U2 or pullups close to the slave device, this assumes that a chip inductor is loaded to emulate a meaningful amount of inductance.
C15 and C16 are placeholders for capacitive loading of the input waveforms, which by default are not loaded.

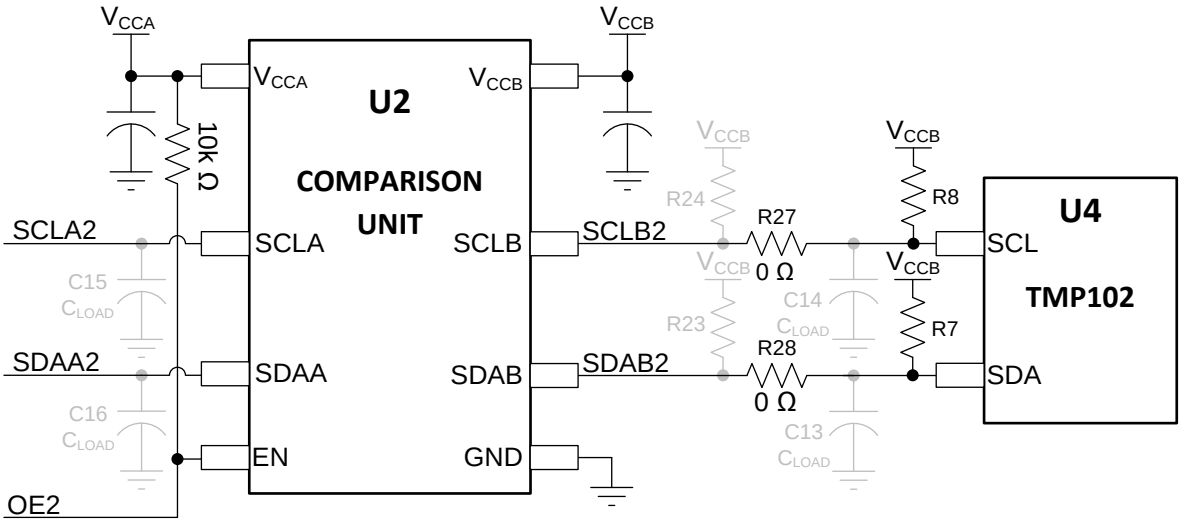


The EVM has also been setup to be able to directly probe onto the SCLB2 and SDAB2. There are large vias that facilitate the scope probe tips and probe ground connections. This was designed to minimize the ground loop to minimize noise being picked up by the probe. This allows for capturing clean waveforms. NOTE: If evaluating a device such as the TCA9517 at U2, calculate the appropriate pullup resistor and load them on to the desired pullup resistor location on the B side of the device.


Copyright © 2017, Texas Instruments Incorporated

6

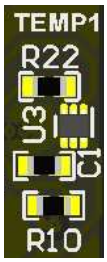


TEMP1 is the I$^2$C controlled temperature sensor (TMP102) at U3 that is connected to the U1 device. The V+ of the temperature sensor is connected to $V_{OUT}$ of the TPS71701 linear regulator. The I$^2$C address of U3 is 0x48h.

7

The TCA9802 is loaded in the U1 location. The TCA9802 or any of the TCA980x devices do not need and in fact must **not** have pullup resistors on the B side of the device. Pullup resistors will affect the operation of the device. There are also place holders for series resistors (R25 and R26) and capacitive loads (C7 and C8). R25 and R26 are by default 0-Ω resistors, but can be replaced with chip inductors, if emulating the parasitic inductance of a wiring harness. C5 and C6 are placeholders for capacitive loading of the input waveforms, which by default are not loaded.

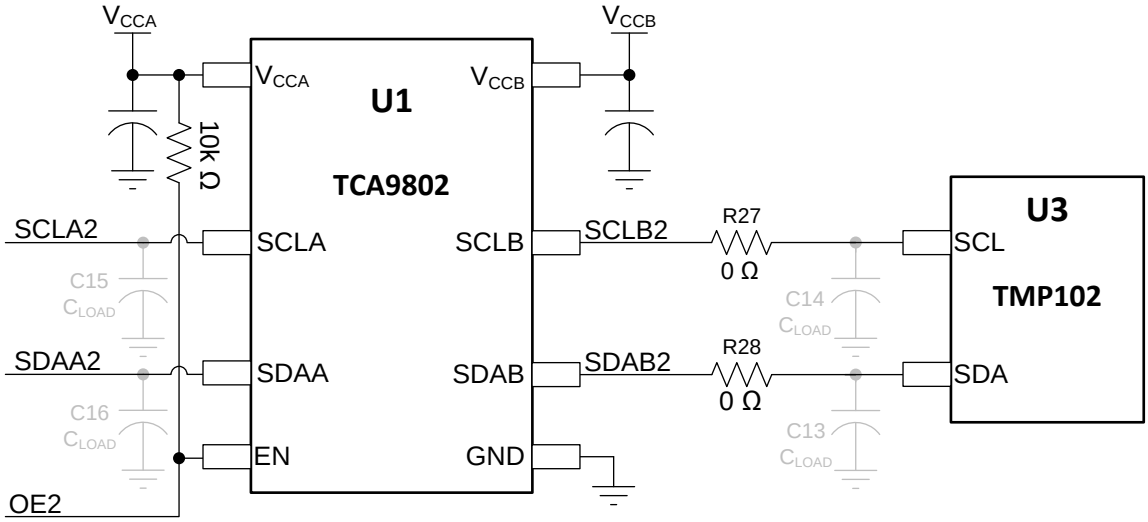


The EVM has also been setup to be able to directly probe onto the SCLB1 and SDAB1. There are large vias that facilitate the scope probe tips and probe ground connections. This was designed to reduce the ground loop to minimize noise being picked up by the probe. This allows for capturing clean waveforms.


Copyright © 2017, Texas Instruments Incorporated

8

The TCA9802 EVM has an onboard linear regulator that controls $V_{CCB}$. $V_{OUT}$ is connected directly to the V+ supply rail of the TMP102A (U5 and U6), which decouples the current draw from $V_{CCB}$. The J4 jumper allows the designer to insert a current meter and measure the current being consumed by the either U1, U2, or both. $V_{OUT}$ is 3.3 V if there is no jumper placed on J3. $V_{OUT}$ is 2.5 V if the jumper is placed across J3-5 and J3-6, 1.8 V if the jumper is placed across J3-3 and J3-4, and 1.65 V if the jumper is placed across J3-1 and J3-2. NOTE: Place only one jumper on J3 at a time.

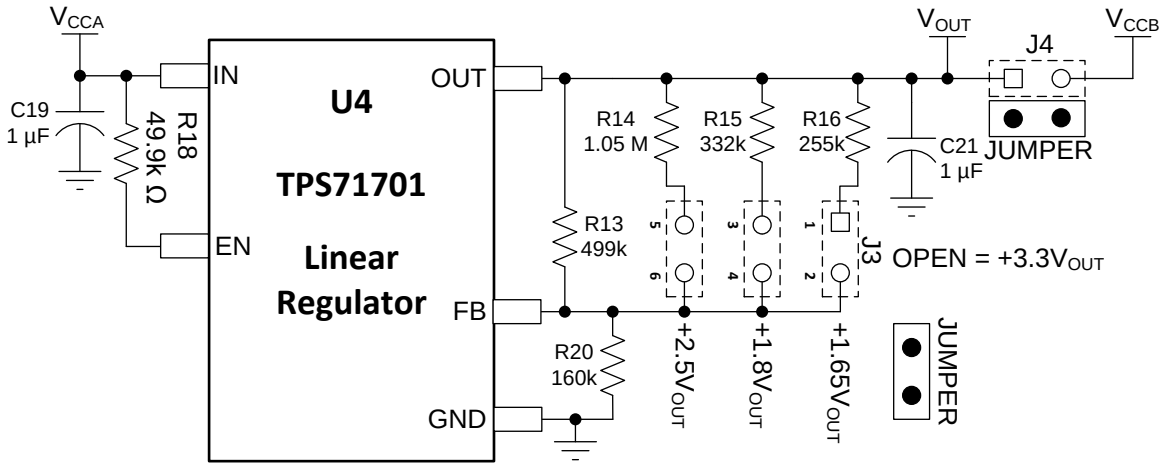


9

The TCA9802EVM was designed so that $V_{CCB}$, the buffered side, can have the input current measured for comparative analysis. This is generally done with a digital multimeter using J4 as the connection point. The OE pin for both U1 and U2 can be controlled independently therefore allowing for comparative analysis between the two. The $I^2C$ temperature sensor, U3 and U4, have their supply on $V_{OUT}$, therefore not affecting $V_{CCB}$ current measurements.

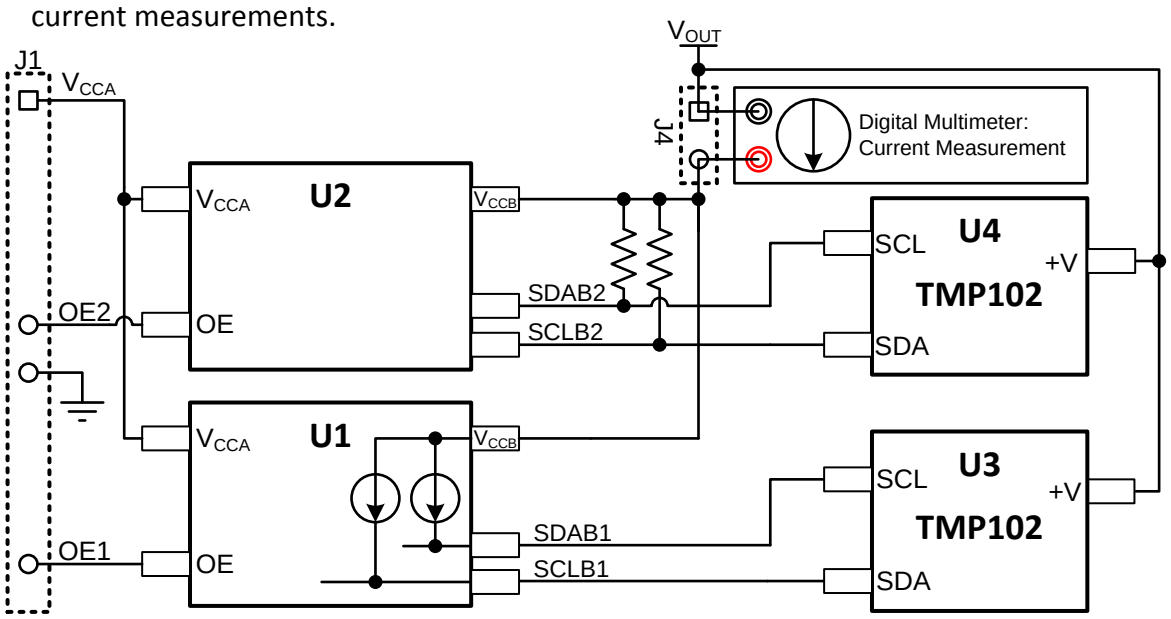



Copyright © 2017, Texas Instruments Incorporated

## 4 Layout

Figure 2 and Figure 3 show the PCB layout images.

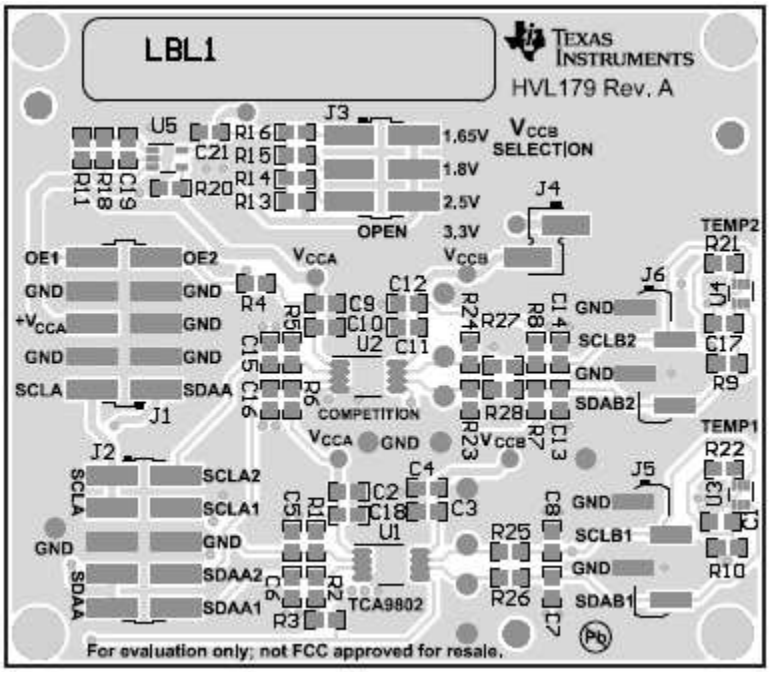


**Figure 2. TCA9802EVM Top Layout**

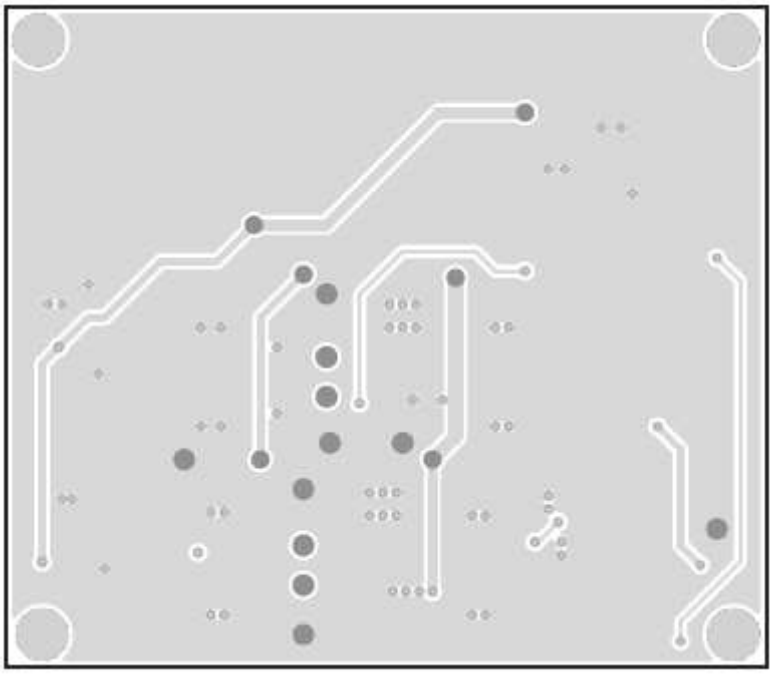

**Figure 3. TCA9802EVM Bottom Layout**


Copyright © 2017, Texas Instruments Incorporated

### 4.1 Setup

This section describes the setup and operation of the EVM for evaluation performance. Figure 4 shows the configuration for operating the TCA9802 I²C buffer using a USB2ANY. An oscilloscope can be connected directly to J1 or the SDA and SCL pins on J5 and J6. Additional large vias for the SCLB, SDAB, and ground are placed on the EVM to facilitate oscilloscope probe tips and scope ground connections. The TCA9802EVM has a dedicated slave peripheral (temperature sensor, TMP102) for each unit, U1 and U2. The temperature sensor of U1 (U3) has an address of 0x48h and sending an I²C read command for that address should give you a hex value of approximately 190h, assuming the EVM is at room temperature (25°C). The address of U4 is 0x49h.

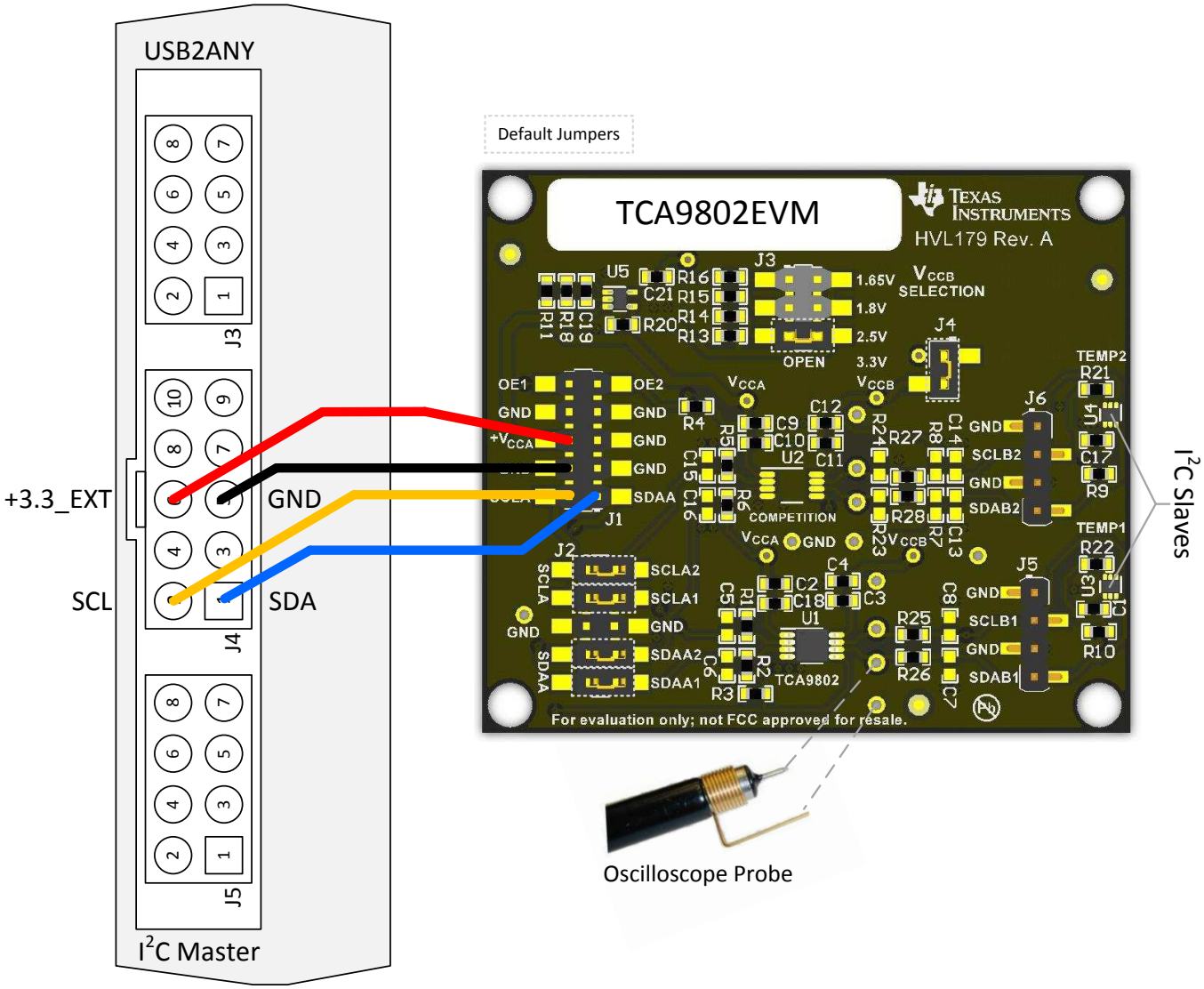


**Figure 4. Example: USB2ANY I²C Master Connected to the TCA9802EVM**

#### 4.1.1 J1, A Side Connections

This is the connection for the leads from the I²C master source. The signals of the USB2ANY I²C master are connected as follows: SDAA = J1-1, SCLA = J1-2, GND = J1-3,4,5,7, or 8, and $+V_{CCA}$= J1-6.


Copyright © 2017, Texas Instruments Incorporated

### 4.1.2 J2, A Side SDA and SCL Selection

This connector allows for the decoupling of which device (U1 or U2) gets the SDA and SCL signals. The default is that U1 and U2 have A side signals connected together, which is performed by the four jumpers that are placed across J2-1 and J2-2, J2-3 and J2-4, J2-7 and J2-8, and J2-9 and J2-10.

### 4.1.3 JP3, $V_{CCB}$ Selection

This is the $V_{CCB}$ voltage selection header, which by default is set to 2.5 V with a jumper placed between the J3-5 and J3-6 location. If no jumper is fitted, then $V_{CCB}$ is set to 3.3 V. A shorting jumper must be installed on JP1 in either the high or low position. The TCA9802 is active high, and ON must not be left floating. An external enable source can be applied to the EVM by removing the shunt and connecting a signal to TP2. Refer to the TCA9802 data sheet (SCPS266) for proper ON and OFF voltage level settings. A switching signal may also be used and connected at this point.

### 4.1.4 J4, $V_{CCB}$ Test Header

J4 allows for placing an external supply on J4-2 or for placing a meter in series to measure current coming from the supply. J4 is loaded with a jumper by default.

### 4.1.5 J5 and J6, B Side Connections

These are probe connections to the B side SDA and SCL, which also go to the TMP102 temperature sensor slave devices, U3 and U4. They can also be used to connect an external slave device.

### 4.1.6 SDA, SCL, and GND Test Points

These are additional large vias to facilitate connections to the B side SDA, SCL, and GND. Figure 5 shows a variety of large vias that either allow for probing of signals or they can also be used to install test points.

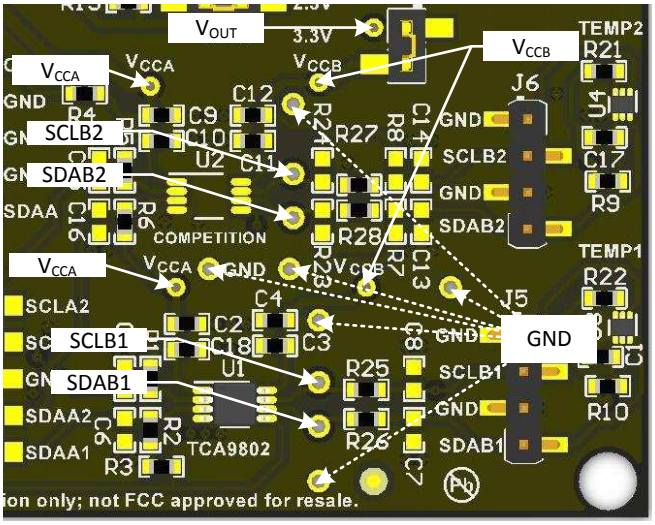


**Figure 5. Vias Labeled on the TCA9802EVM**

## 5 Operation

This EVM was specifically designed to translate and buffer the communication between an $I^2C$ master with the TMP102 $I^2C$ temperature sensor. Temperature sensor U3 has an $I^2C$ address of 0x48 and temperature sensor U4 has an $I^2C$ address of 0x49. Instructions on how to communicate with the TMP102 temperature sensor are found in the TMP102 data sheet (SBOS397).


Copyright © 2017, Texas Instruments Incorporated

# 6 Bill of Materials (BOM)

Table 1 lists the EVM BOM.

**Table 1. Bill of Materials TCA9802EVM**

| Qty | Designator | Value | Description | Package Reference | Manufacturer | Part Number |
|---|---|---|---|---|---|---|
| 1 | !PCB | | Printed Circuit Board | | Any | HVL179 |
| 6 | C2, C4, C10, C12, C19, C21 | 1uF | CAP, CERM, 1 µF, 16 V, ±10%, X5R, 0603 | 0603 | Murata | GRM188R71E105KA12D |
| 6 | C1, C3, C9, C11, C17, C18 | 0.1uF | CAP, CERM, 0.1 µF, 25 V, ±10%, X7R, 0603 | 0603 | Murata | GRM188R72A104KA35J |
| 1 | LBL1 | | thermal Transfer Printable Labels, 1.250" x 0.250" | | Brady | THT-13-457-10 |
| 2 | J1, J2 | | Header, 2.54mm, 5x2, Gold, SMT | Header, 2.54mm, 5x2, SMT | Samtec | TSM-105-01-L-DV |
| 1 | JP3 | | Header, 2.54mm, 3x2, Gold, SMT | Header, 2.54mm, 3x2, SMT | Samtec | TSM-103-01-L-DV |
| 1 | JP4 | | Header, 2.54mm, 2x1, Tin, SMT | Header, 2.54mm, 2x1, SMT | Samtec | TSM-102-03-T-SV |
| 2 | J5, J6 | | Header, 2.54mm, 4x1, Gold, SMT | Header, 2.54mm, 4x1, SMT | Wurth Elektronik | 61000418221 |
| 6 | R1, R2, R5, R6, R21, R22 | 4.70k | RES, 4.70 k, 1%, 0.1 W, 0603 | 0603 | Yageo America | RC0603FR-074K7L |
| 2 | R3, R4 | 10.0k | RES, 10.0 k, 1%, 0.1 W, 0603 | 0603 | Vishay-Dale | CRCW060310K0FKEA |
| 7 | R9, R10, R11, R25, R26, R27, R28 | 0 | RES, 0, 5%, 0.1 W, 0603 | 0603 | Vishay-Dale | CRCW06030000Z0EA |
| 1 | R13 | 499k | RES, 499 k, 1%, 0.1 W, 0603 | 0603 | Vishay-Dale | CRCW0603499KFKEA |
| 1 | R14 | 1.05Meg | RES, 1.05 M, 1%, 0.1 W, 0603 | 0603 | Vishay-Dale | CRCW06031M05FKEA |
| 1 | R15 | 332k | RES, 332 k, 1%, 0.1 W, 0603 | 0603 | Vishay-Dale | CRCW0603332KFKEA |
| 1 | R16 | 255k | RES, 255 k, 1%, 0.1 W, 0603 | 0603 | Vishay-Dale | CRCW0603255KFKEA |
| 1 | R18 | 49.9k | RES, 49.9 k, 1%, 0.1 W, 0603 | 0603 | Vishay-Dale | CRCW060349K9FKEA |
| 1 | R20 | 160k | RES, 160 k, 1%, 0.1 W, 0603 | 0603 | Vishay-Dale | CRCW0603160KFKEA |
| 6 | SH-J1, SH-J2, SH-J3, SH-J4, SH-J5, SH-J6 | 1x2 | Shunt, 100mil, Gold plated, Black | Shunt | 3M | 969102-0000-DA |
| 1 | U1 | | LEVEL-TRANSLATING I2C BUS REPEATER, DGK0008A | DGK0008A | Texas Instruments | TCA9802DGKR |
| 2 | U3, U4 | | Low Power Digital Temperature Sensor With SMBus/Two-Wire Serial Interface in SOT563, DRL0006A (SOT-6) | DRL0006A | Texas Instruments | TMP102AIDRLR |
| 1 | U5 | | Single Output LDO, 150 mA, Adjustable 0.9 to 6.2 V Output, 2.5 to 6.5 V Input, with High-Bandwidth PSRR, 5-pin SC70 (DCK) | DCK0005A | Texas Instruments | TPS71701DCKT |
| 0 | FID1, FID2, FID3 | | Fiducial mark. There is nothing to buy or mount. | Fiducial | N/A | N/A |



Copyright © 2017, Texas Instruments Incorporated

# STANDARD TERMS FOR EVALUATION MODULES

1. *Delivery:* TI delivers TI evaluation boards, kits, or modules, including any accompanying demonstration software, components, and/or documentation which may be provided together or separately (collectively, an “EVM” or “EVMs”) to the User (“User”) in accordance with the terms set forth herein. User's acceptance of the EVM is expressly subject to the following terms.

   1.1 EVMs are intended solely for product or software developers for use in a research and development setting to facilitate feasibility evaluation, experimentation, or scientific analysis of TI semiconductors products. EVMs have no direct function and are not finished products. EVMs shall not be directly or indirectly assembled as a part or subassembly in any finished product. For clarification, any software or software tools provided with the EVM (“Software”) shall not be subject to the terms and conditions set forth herein but rather shall be subject to the applicable terms that accompany such Software

   1.2 EVMs are not intended for consumer or household use. EVMs may not be sold, sublicensed, leased, rented, loaned, assigned, or otherwise distributed for commercial purposes by Users, in whole or in part, or used in any finished product or production system.

2 *Limited Warranty and Related Remedies/Disclaimers*:

   2.1 These terms do not apply to Software. The warranty, if any, for Software is covered in the applicable Software License Agreement.

   2.2 TI warrants that the TI EVM will conform to TI's published specifications for ninety (90) days after the date TI delivers such EVM to User. Notwithstanding the foregoing, TI shall not be liable for a nonconforming EVM if (a) the nonconformity was caused by neglect, misuse or mistreatment by an entity other than TI, including improper installation or testing, or for any EVMs that have been altered or modified in any way by an entity other than TI, (b) the nonconformity resulted from User's design, specifications or instructions for such EVMs or improper system design, or (c) User has not paid on time. Testing and other quality control techniques are used to the extent TI deems necessary. TI does not test all parameters of each EVM. User's claims against TI under this Section 2 are void if User fails to notify TI of any apparent defects in the EVMs within ten (10) business days after delivery, or of any hidden defects with ten (10) business days after the defect has been detected.

   2.3 TI's sole liability shall be at its option to repair or replace EVMs that fail to conform to the warranty set forth above, or credit User's account for such EVM. TI's liability under this warranty shall be limited to EVMs that are returned during the warranty period to the address designated by TI and that are determined by TI not to conform to such warranty. If TI elects to repair or replace such EVM, TI shall have a reasonable time to repair such EVM or provide replacements. Repaired EVMs shall be warranted for the remainder of the original warranty period. Replaced EVMs shall be warranted for a new full ninety (90) day warranty period.

3 *Regulatory Notices:*

   3.1 *United States*

      3.1.1 *Notice applicable to EVMs not FCC-Approved:*

      **FCC NOTICE:** This kit is designed to allow product developers to evaluate electronic components, circuitry, or software associated with the kit to determine whether to incorporate such items in a finished product and software developers to write software applications for use with the end product. This kit is not a finished product and when assembled may not be resold or otherwise marketed unless all required FCC equipment authorizations are first obtained. Operation is subject to the condition that this product not cause harmful interference to licensed radio stations and that this product accept harmful interference. Unless the assembled kit is designed to operate under part 15, part 18 or part 95 of this chapter, the operator of the kit must operate under the authority of an FCC license holder or must secure an experimental authorization under part 5 of this chapter.

      3.1.2 *For EVMs annotated as FCC – FEDERAL COMMUNICATIONS COMMISSION Part 15 Compliant:*

      **CAUTION**

      This device complies with part 15 of the FCC Rules. Operation is subject to the following two conditions: (1) This device may not cause harmful interference, and (2) this device must accept any interference received, including interference that may cause undesired operation.

      Changes or modifications not expressly approved by the party responsible for compliance could void the user's authority to operate the equipment.

      **FCC Interference Statement for Class A EVM devices**

      *NOTE: This equipment has been tested and found to comply with the limits for a Class A digital device, pursuant to part 15 of the FCC Rules. These limits are designed to provide reasonable protection against harmful interference when the equipment is operated in a commercial environment. This equipment generates, uses, and can radiate radio frequency energy and, if not installed and used in accordance with the instruction manual, may cause harmful interference to radio communications. Operation of this equipment in a residential area is likely to cause harmful interference in which case the user will be required to correct the interference at his own expense.*

**FCC Interference Statement for Class B EVM devices**

*NOTE: This equipment has been tested and found to comply with the limits for a Class B digital device, pursuant to part 15 of the FCC Rules. These limits are designed to provide reasonable protection against harmful interference in a residential installation. This equipment generates, uses and can radiate radio frequency energy and, if not installed and used in accordance with the instructions, may cause harmful interference to radio communications. However, there is no guarantee that interference will not occur in a particular installation. If this equipment does cause harmful interference to radio or television reception, which can be determined by turning the equipment off and on, the user is encouraged to try to correct the interference by one or more of the following measures:*

- *Reorient or relocate the receiving antenna.*
- *Increase the separation between the equipment and receiver.*
- *Connect the equipment into an outlet on a circuit different from that to which the receiver is connected.*
- *Consult the dealer or an experienced radio/TV technician for help.*

3.2 *Canada*

3.2.1 *For EVMs issued with an Industry Canada Certificate of Conformance to RSS-210 or RSS-247*

**Concerning EVMs Including Radio Transmitters:**

This device complies with Industry Canada license-exempt RSSs. Operation is subject to the following two conditions:

(1) this device may not cause interference, and (2) this device must accept any interference, including interference that may cause undesired operation of the device.

**Concernant les EVMs avec appareils radio:**

Le présent appareil est conforme aux CNR d'Industrie Canada applicables aux appareils radio exempts de licence. L'exploitation est autorisée aux deux conditions suivantes: (1) l'appareil ne doit pas produire de brouillage, et (2) l'utilisateur de l'appareil doit accepter tout brouillage radioélectrique subi, même si le brouillage est susceptible d'en compromettre le fonctionnement.

**Concerning EVMs Including Detachable Antennas:**

Under Industry Canada regulations, this radio transmitter may only operate using an antenna of a type and maximum (or lesser) gain approved for the transmitter by Industry Canada. To reduce potential radio interference to other users, the antenna type and its gain should be so chosen that the equivalent isotropically radiated power (e.i.r.p.) is not more than that necessary for successful communication. This radio transmitter has been approved by Industry Canada to operate with the antenna types listed in the user guide with the maximum permissible gain and required antenna impedance for each antenna type indicated. Antenna types not included in this list, having a gain greater than the maximum gain indicated for that type, are strictly prohibited for use with this device.

**Concernant les EVMs avec antennes détachables**

Conformément à la réglementation d'Industrie Canada, le présent émetteur radio peut fonctionner avec une antenne d'un type et d'un gain maximal (ou inférieur) approuvé pour l'émetteur par Industrie Canada. Dans le but de réduire les risques de brouillage radioélectrique à l'intention des autres utilisateurs, il faut choisir le type d'antenne et son gain de sorte que la puissance isotrope rayonnée équivalente (p.i.r.e.) ne dépasse pas l'intensité nécessaire à l'établissement d'une communication satisfaisante. Le présent émetteur radio a été approuvé par Industrie Canada pour fonctionner avec les types d'antenne énumérés dans le manuel d'usage et ayant un gain admissible maximal et l'impédance requise pour chaque type d'antenne. Les types d'antenne non inclus dans cette liste, ou dont le gain est supérieur au gain maximal indiqué, sont strictement interdits pour l'exploitation de l'émetteur

3.3 *Japan*

3.3.1 *Notice for EVMs delivered in Japan:* Please see http://www.tij.co.jp/lsds/ti_ja/general/eStore/notice_01.page 日本国内に輸入される評価用キット、ボードについては、次のところをご覧ください。
http://www.tij.co.jp/lsds/ti_ja/general/eStore/notice_01.page

3.3.2 *Notice for Users of EVMs Considered "Radio Frequency Products" in Japan:* EVMs entering Japan may not be certified by TI as conforming to Technical Regulations of Radio Law of Japan.

If User uses EVMs in Japan, not certified to Technical Regulations of Radio Law of Japan, User is required to follow the instructions set forth by Radio Law of Japan, which includes, but is not limited to, the instructions below with respect to EVMs (which for the avoidance of doubt are stated strictly for convenience and should be verified by User):

1. Use EVMs in a shielded room or any other test facility as defined in the notification #173 issued by Ministry of Internal Affairs and Communications on March 28, 2006, based on Sub-section 1.1 of Article 6 of the Ministry's Rule for Enforcement of Radio Law of Japan,
2. Use EVMs only after User obtains the license of Test Radio Station as provided in Radio Law of Japan with respect to EVMs, or
3. Use of EVMs only after User obtains the Technical Regulations Conformity Certification as provided in Radio Law of Japan with respect to EVMs. Also, do not transfer EVMs, unless User gives the same notice above to the transferee. Please note that if User does not follow the instructions above, User will be subject to penalties of Radio Law of Japan.

【無線電波を送信する製品の開発キットをお使いになる際の注意事項】 開発キットの中には技術基準適合証明を受けていないものがあります。 技術適合証明を受けていないもののご使用に際しては、電波法遵守のため、以下のいずれかの措置を取っていただく必要がありますのでご注意ください。

1. 電波法施行規則第6条第1項第1号に基づく平成18年3月28日総務省告示第173号で定められた電波暗室等の試験設備でご使用いただく。
2. 実験局の免許を取得後ご使用いただく。
3. 技術基準適合証明を取得後ご使用いただく。

なお、本製品は、上記の「ご使用にあたっての注意」を譲渡先、移転先に通知しない限り、譲渡、移転できないものとします。

上記を遵守頂けない場合は、電波法の罰則が適用される可能性があることをご留意ください。 日本テキサス・インスツルメンツ株式会社

東京都新宿区西新宿６丁目２４番１号

西新宿三井ビル

3.3.3 *Notice for EVMs for Power Line Communication:* Please see http://www.tij.co.jp/lsds/ti_ja/general/eStore/notice_02.page

電力線搬送波通信についての開発キットをお使いになる際の注意事項については、次のところをご覧ください。http://www.tij.co.jp/lsds/ti_ja/general/eStore/notice_02.page

3.4 *European Union*

3.4.1 *For EVMs subject to EU Directive 2014/30/EU (Electromagnetic Compatibility Directive)*:

This is a class A product intended for use in environments other than domestic environments that are connected to a low-voltage power-supply network that supplies buildings used for domestic purposes. In a domestic environment this product may cause radio interference in which case the user may be required to take adequate measures.

4 *EVM Use Restrictions and Warnings:*

4.1 EVMS ARE NOT FOR USE IN FUNCTIONAL SAFETY AND/OR SAFETY CRITICAL EVALUATIONS, INCLUDING BUT NOT LIMITED TO EVALUATIONS OF LIFE SUPPORT APPLICATIONS.

4.2 User must read and apply the user guide and other available documentation provided by TI regarding the EVM prior to handling or using the EVM, including without limitation any warning or restriction notices. The notices contain important safety information related to, for example, temperatures and voltages.

4.3 *Safety-Related Warnings and Restrictions:*

4.3.1 User shall operate the EVM within TI's recommended specifications and environmental considerations stated in the user guide, other available documentation provided by TI, and any other applicable requirements and employ reasonable and customary safeguards. Exceeding the specified performance ratings and specifications (including but not limited to input and output voltage, current, power, and environmental ranges) for the EVM may cause personal injury or death, or property damage. If there are questions concerning performance ratings and specifications, User should contact a TI field representative prior to connecting interface electronics including input power and intended loads. Any loads applied outside of the specified output range may also result in unintended and/or inaccurate operation and/or possible permanent damage to the EVM and/or interface electronics. Please consult the EVM user guide prior to connecting any load to the EVM output. If there is uncertainty as to the load specification, please contact a TI field representative. During normal operation, even with the inputs and outputs kept within the specified allowable ranges, some circuit components may have elevated case temperatures. These components include but are not limited to linear regulators, switching transistors, pass transistors, current sense resistors, and heat sinks, which can be identified using the information in the associated documentation. When working with the EVM, please be aware that the EVM may become very warm.

4.3.2 EVMs are intended solely for use by technically qualified, professional electronics experts who are familiar with the dangers and application risks associated with handling electrical mechanical components, systems, and subsystems. User assumes all responsibility and liability for proper and safe handling and use of the EVM by User or its employees, affiliates, contractors or designees. User assumes all responsibility and liability to ensure that any interfaces (electronic and/or mechanical) between the EVM and any human body are designed with suitable isolation and means to safely limit accessible leakage currents to minimize the risk of electrical shock hazard. User assumes all responsibility and liability for any improper or unsafe handling or use of the EVM by User or its employees, affiliates, contractors or designees.

4.4 User assumes all responsibility and liability to determine whether the EVM is subject to any applicable international, federal, state, or local laws and regulations related to User's handling and use of the EVM and, if applicable, User assumes all responsibility and liability for compliance in all respects with such laws and regulations. User assumes all responsibility and liability for proper disposal and recycling of the EVM consistent with all applicable international, federal, state, and local requirements.

5. *Accuracy of Information:* To the extent TI provides information on the availability and function of EVMs, TI attempts to be as accurate as possible. However, TI does not warrant the accuracy of EVM descriptions, EVM availability or other information on its websites as accurate, complete, reliable, current, or error-free.

6. *Disclaimers:*

   6.1 EXCEPT AS SET FORTH ABOVE, EVMS AND ANY MATERIALS PROVIDED WITH THE EVM (INCLUDING, BUT NOT LIMITED TO, REFERENCE DESIGNS AND THE DESIGN OF THE EVM ITSELF) ARE PROVIDED "AS IS" AND "WITH ALL FAULTS." TI DISCLAIMS ALL OTHER WARRANTIES, EXPRESS OR IMPLIED, REGARDING SUCH ITEMS, INCLUDING BUT NOT LIMITED TO ANY EPIDEMIC FAILURE WARRANTY OR IMPLIED WARRANTIES OF MERCHANTABILITY OR FITNESS FOR A PARTICULAR PURPOSE OR NON-INFRINGEMENT OF ANY THIRD PARTY PATENTS, COPYRIGHTS, TRADE SECRETS OR OTHER INTELLECTUAL PROPERTY RIGHTS.

   6.2 EXCEPT FOR THE LIMITED RIGHT TO USE THE EVM SET FORTH HEREIN, NOTHING IN THESE TERMS SHALL BE CONSTRUED AS GRANTING OR CONFERRING ANY RIGHTS BY LICENSE, PATENT, OR ANY OTHER INDUSTRIAL OR INTELLECTUAL PROPERTY RIGHT OF TI, ITS SUPPLIERS/LICENSORS OR ANY OTHER THIRD PARTY, TO USE THE EVM IN ANY FINISHED END-USER OR READY-TO-USE FINAL PRODUCT, OR FOR ANY INVENTION, DISCOVERY OR IMPROVEMENT, REGARDLESS OF WHEN MADE, CONCEIVED OR ACQUIRED.

7. *USER'S INDEMNITY OBLIGATIONS AND REPRESENTATIONS.* USER WILL DEFEND, INDEMNIFY AND HOLD TI, ITS LICENSORS AND THEIR REPRESENTATIVES HARMLESS FROM AND AGAINST ANY AND ALL CLAIMS, DAMAGES, LOSSES, EXPENSES, COSTS AND LIABILITIES (COLLECTIVELY, "CLAIMS") ARISING OUT OF OR IN CONNECTION WITH ANY HANDLING OR USE OF THE EVM THAT IS NOT IN ACCORDANCE WITH THESE TERMS. THIS OBLIGATION SHALL APPLY WHETHER CLAIMS ARISE UNDER STATUTE, REGULATION, OR THE LAW OF TORT, CONTRACT OR ANY OTHER LEGAL THEORY, AND EVEN IF THE EVM FAILS TO PERFORM AS DESCRIBED OR EXPECTED.

8. *Limitations on Damages and Liability:*

   8.1 *General Limitations*. IN NO EVENT SHALL TI BE LIABLE FOR ANY SPECIAL, COLLATERAL, INDIRECT, PUNITIVE, INCIDENTAL, CONSEQUENTIAL, OR EXEMPLARY DAMAGES IN CONNECTION WITH OR ARISING OUT OF THESE TERMS OR THE USE OF THE EVMS , REGARDLESS OF WHETHER TI HAS BEEN ADVISED OF THE POSSIBILITY OF SUCH DAMAGES. EXCLUDED DAMAGES INCLUDE, BUT ARE NOT LIMITED TO, COST OF REMOVAL OR REINSTALLATION, ANCILLARY COSTS TO THE PROCUREMENT OF SUBSTITUTE GOODS OR SERVICES, RETESTING, OUTSIDE COMPUTER TIME, LABOR COSTS, LOSS OF GOODWILL, LOSS OF PROFITS, LOSS OF SAVINGS, LOSS OF USE, LOSS OF DATA, OR BUSINESS INTERRUPTION. NO CLAIM, SUIT OR ACTION SHALL BE BROUGHT AGAINST TI MORE THAN TWELVE (12) MONTHS AFTER THE EVENT THAT GAVE RISE TO THE CAUSE OF ACTION HAS OCCURRED.

   8.2 *Specific Limitations.* IN NO EVENT SHALL TI'S AGGREGATE LIABILITY FROM ANY USE OF AN EVM PROVIDED HEREUNDER, INCLUDING FROM ANY WARRANTY, INDEMITY OR OTHER OBLIGATION ARISING OUT OF OR IN CONNECTION WITH THESE TERMS, , EXCEED THE TOTAL AMOUNT PAID TO TI BY USER FOR THE PARTICULAR EVM(S) AT ISSUE DURING THE PRIOR TWELVE (12) MONTHS WITH RESPECT TO WHICH LOSSES OR DAMAGES ARE CLAIMED. THE EXISTENCE OF MORE THAN ONE CLAIM SHALL NOT ENLARGE OR EXTEND THIS LIMIT.

9. *Return Policy.* Except as otherwise provided, TI does not offer any refunds, returns, or exchanges. Furthermore, no return of EVM(s) will be accepted if the package has been opened and no return of the EVM(s) will be accepted if they are damaged or otherwise not in a resalable condition. If User feels it has been incorrectly charged for the EVM(s) it ordered or that delivery violates the applicable order, User should contact TI. All refunds will be made in full within thirty (30) working days from the return of the components(s), excluding any postage or packaging costs.

10. *Governing Law:* These terms and conditions shall be governed by and interpreted in accordance with the laws of the State of Texas, without reference to conflict-of-laws principles. User agrees that non-exclusive jurisdiction for any dispute arising out of or relating to these terms and conditions lies within courts located in the State of Texas and consents to venue in Dallas County, Texas. Notwithstanding the foregoing, any judgment may be enforced in any United States or foreign court, and TI may seek injunctive relief in any United States or foreign court.

Mailing Address: Texas Instruments, Post Office Box 655303, Dallas, Texas 75265
Copyright © 2017, Texas Instruments Incorporated

## IMPORTANT NOTICE FOR TI DESIGN INFORMATION AND RESOURCES

Texas Instruments Incorporated ('TI") technical, application or other design advice, services or information, including, but not limited to, reference designs and materials relating to evaluation modules, (collectively, "TI Resources") are intended to assist designers who are developing applications that incorporate TI products; by downloading, accessing or using any particular TI Resource in any way, you (individually or, if you are acting on behalf of a company, your company) agree to use it solely for this purpose and subject to the terms of this Notice.

TI's provision of TI Resources does not expand or otherwise alter TI's applicable published warranties or warranty disclaimers for TI products, and no additional obligations or liabilities arise from TI providing such TI Resources. TI reserves the right to make corrections, enhancements, improvements and other changes to its TI Resources.

You understand and agree that you remain responsible for using your independent analysis, evaluation and judgment in designing your applications and that you have full and exclusive responsibility to assure the safety of your applications and compliance of your applications (and of all TI products used in or for your applications) with all applicable regulations, laws and other applicable requirements. You represent that, with respect to your applications, you have all the necessary expertise to create and implement safeguards that (1) anticipate dangerous consequences of failures, (2) monitor failures and their consequences, and (3) lessen the likelihood of failures that might cause harm and take appropriate actions. You agree that prior to using or distributing any applications that include TI products, you will thoroughly test such applications and the functionality of such TI products as used in such applications. TI has not conducted any testing other than that specifically described in the published documentation for a particular TI Resource.

You are authorized to use, copy and modify any individual TI Resource only in connection with the development of applications that include the TI product(s) identified in such TI Resource. NO OTHER LICENSE, EXPRESS OR IMPLIED, BY ESTOPPEL OR OTHERWISE TO ANY OTHER TI INTELLECTUAL PROPERTY RIGHT, AND NO LICENSE TO ANY TECHNOLOGY OR INTELLECTUAL PROPERTY RIGHT OF TI OR ANY THIRD PARTY IS GRANTED HEREIN, including but not limited to any patent right, copyright, mask work right, or other intellectual property right relating to any combination, machine, or process in which TI products or services are used. Information regarding or referencing third-party products or services does not constitute a license to use such products or services, or a warranty or endorsement thereof. Use of TI Resources may require a license from a third party under the patents or other intellectual property of the third party, or a license from TI under the patents or other intellectual property of TI.

TI RESOURCES ARE PROVIDED "AS IS" AND WITH ALL FAULTS. TI DISCLAIMS ALL OTHER WARRANTIES OR REPRESENTATIONS, EXPRESS OR IMPLIED, REGARDING TI RESOURCES OR USE THEREOF, INCLUDING BUT NOT LIMITED TO ACCURACY OR COMPLETENESS, TITLE, ANY EPIDEMIC FAILURE WARRANTY AND ANY IMPLIED WARRANTIES OF MERCHANTABILITY, FITNESS FOR A PARTICULAR PURPOSE, AND NON-INFRINGEMENT OF ANY THIRD PARTY INTELLECTUAL PROPERTY RIGHTS.

TI SHALL NOT BE LIABLE FOR AND SHALL NOT DEFEND OR INDEMNIFY YOU AGAINST ANY CLAIM, INCLUDING BUT NOT LIMITED TO ANY INFRINGEMENT CLAIM THAT RELATES TO OR IS BASED ON ANY COMBINATION OF PRODUCTS EVEN IF DESCRIBED IN TI RESOURCES OR OTHERWISE. IN NO EVENT SHALL TI BE LIABLE FOR ANY ACTUAL, DIRECT, SPECIAL, COLLATERAL, INDIRECT, PUNITIVE, INCIDENTAL, CONSEQUENTIAL OR EXEMPLARY DAMAGES IN CONNECTION WITH OR ARISING OUT OF TI RESOURCES OR USE THEREOF, AND REGARDLESS OF WHETHER TI HAS BEEN ADVISED OF THE POSSIBILITY OF SUCH DAMAGES.

You agree to fully indemnify TI and its representatives against any damages, costs, losses, and/or liabilities arising out of your non-compliance with the terms and provisions of this Notice.

This Notice applies to TI Resources. Additional terms apply to the use and purchase of certain types of materials, TI products and services. These include; without limitation, TI's standard terms for semiconductor products http://www.ti.com/sc/docs/stdterms.htm), evaluation modules, and samples (http://www.ti.com/sc/docs/sampterms.htm).

Mailing Address: Texas Instruments, Post Office Box 655303, Dallas, Texas 75265
Copyright © 2017, Texas Instruments Incorporated