SIEMENS

Proximity Switch

TCA 305
TCA 355

Bipolar IC

Features

- Lower open-loop current consumption; I_S < 1 mA
- Lower output saturation voltage
- The temperature dependence of the switching distance is lower and compensation of the resonant circuit *TC* (temperature coefficient) is easier
- The sensitivity is higher, so that larger switching distances are possible and coils of a lower quality can be used
- The switching hysteresis remains constant as regards temperature, supply voltage and switching distance
- The TCA 305 even functions without external integrating capacitor. With an external capacitor (or with RC combination) good noise immunity can be achieved
- The outputs are temporarily short-circuit proof (approx. 10 s to 1 min depending on package)
- The outputs are disabled when V_S < approx. 4.5 V and are enabled when the oscillator stabilizes (from $V_{S\,min}$ = 5 V)
- Higher switching frequencies can be obtained
- Miniature package



P-DSO-8-1

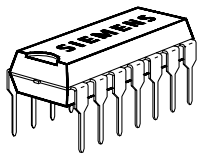

P-DIP-14-1

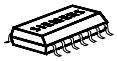

P-DSO-14-1

Type	Ordering Code	Package
■ TCA 305 A	Q67000-A2291	P-DIP-14-1
TCA 305 G	Q67000-A2305	P-DSO-14-1 (SMD)
TCA 355 G	Q67000-A2444	P-DSO-8-1 (SMD)

■ Not for new design

TCA 305 A

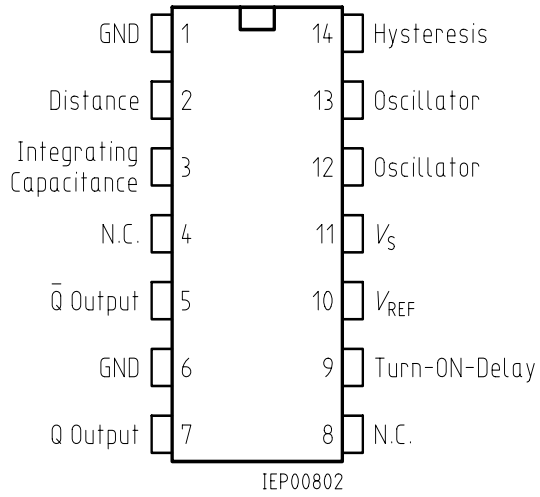

TCA 355 G

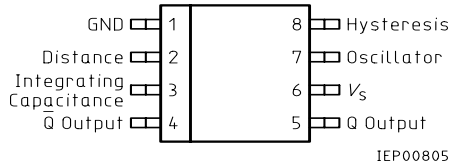

TCA 305 G

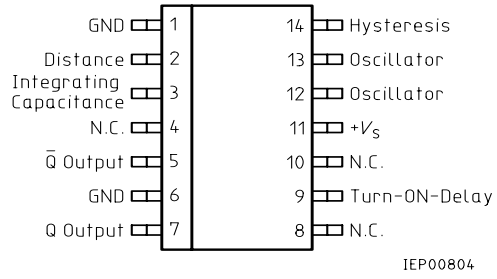

Pin Configurations (top view)

The devices TCA 305 and TCA 355 contain all the functions necessary to design inductive proximity switches. By approaching a standard metal plate to the coil, the resonant circuit is damped and the outputs are switched.

Operation Schematic: see TCA 205

The types TCA 305 and TCA 355 have been developed from the type TCA 205 and are outstanding for the following characteristics:

Logic Functions

Oscillator	Outputs	
	Q	
not damped	H	L
damped	L	H

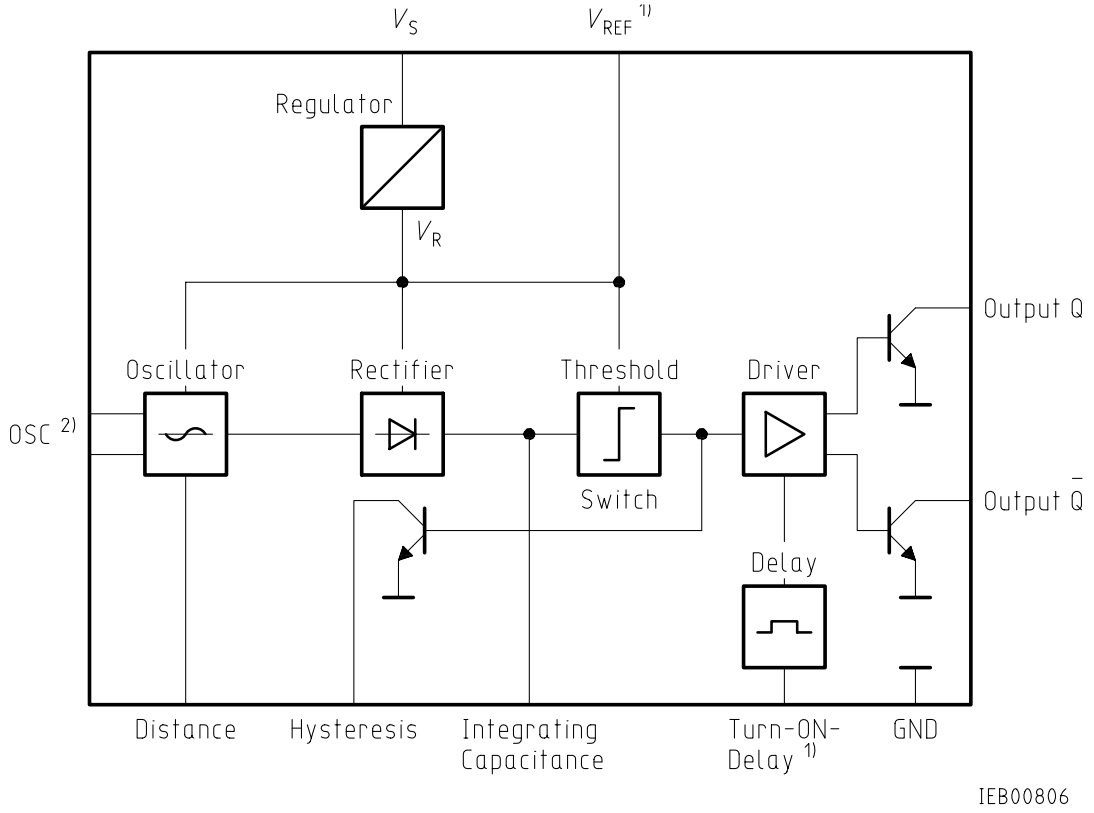

1) TCA 305 only
2) Connected internally in case of TCA 355

Block Diagram

Standard Turn-ON Delay Referred to T_A = 25 °C

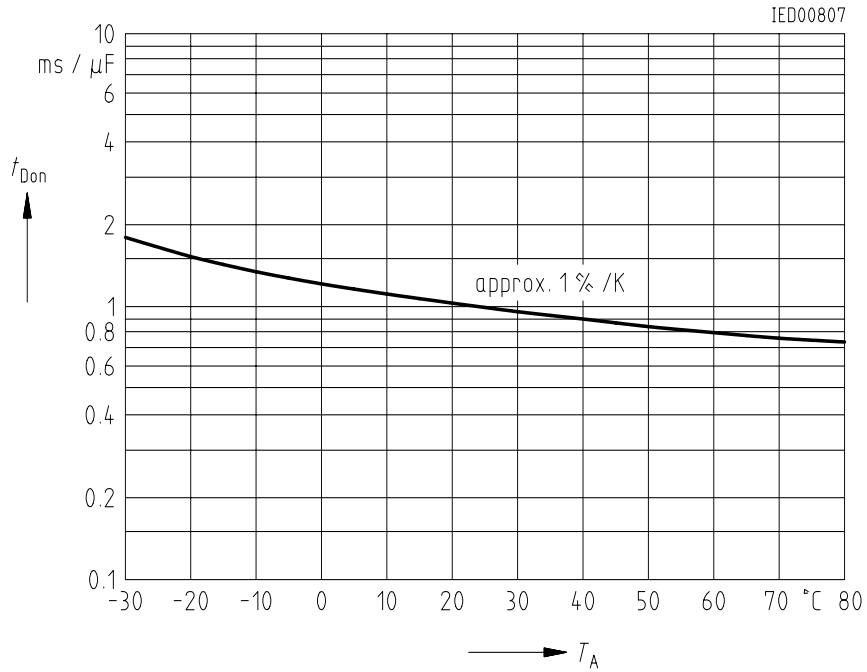

Absolute Maximum Ratings

Parameter	Symbol	Limit Values	Unit
Supply voltage Output voltage	V_S V_Q	35 35	V V
Output current	I_Q	50	mA
Distance, hysteresis resistance	R_{Di}, R_{Hy}	0	Ω
Capacitances	C_I, C_D	5	µF
Junction temperature Storage temperature range	T_j T_{stg}	150 – 55 to 125	˚C ˚C
Thermal resistance system - air TCA 305 A TCA 305 G	 $R_{th\ SA}$ $R_{th\ SA}$	 85 (135)[2] 140 (200)[2]	 K/W K/W

Operating Range

Supply voltage	V_S	5 to 30[3]	V
Oscillator frequency	f_{OSC}	0.015 to 1.5	MHz
Ambient temperature	T_A	– 25 to 85	˚C

Characteristics

V_S = 12 V, T_A = – 25 to 85 ˚C

Parameter	Symbol	Limit Values			Unit	Test Condition
		min.	typ.	max.		
Open-loop current consumption	I_S		0.6	0.9 (1.0)[2]	mA	outputs open
Reference voltage[1] L-output voltage per output 	V_{REF} $V_{Q\,L}$ $V_{Q\,L}$ $V_{Q\,L}$		3.2 0.04 0.10 0.22	 0.15 0.35 0.75	V V V V	I_{REF}< 10 µA $I_{Q\,L}$ = 5 mA $I_{Q\,L}$ = 25 mA $I_{Q\,L}$ = 50 mA
H-output current per output	$I_{Q\,H}$			10	µA	$V_{Q\,H}$ = 30 V
Threshold at 3 Hysteresis at 3	$V_{S\,3}$ V_{Hy}	 0.4	2.1 0.5	 0.6	V V	
Turn-ON delay[1]	$t_{D\,ON}$	– 25 %	600	– 25 %	ms/µF	T_A = 25 ˚C
Switching frequency w/o C_I	f_S			5	kHz	

[1] TCA 305 only

[2] Values in parenthesis apply to TCA 355 only

[3] Operation at voltages less than 5 V (between approx. 2.5 and 5 V) is possible, if V_{REF} is connected to V_S. In this case V_{REF} is no longer internally stabilized. Additionally, the pin "turn-on delay" is to be applied as follows: If no turn-on delay is needed, this pin has to be connected to V_S. If, however, a turn-on delay is required, the charge current for D_D has to be adjusted with an external resistor between this pin and V_S (recommended value 390 kΩ).

Oscilator

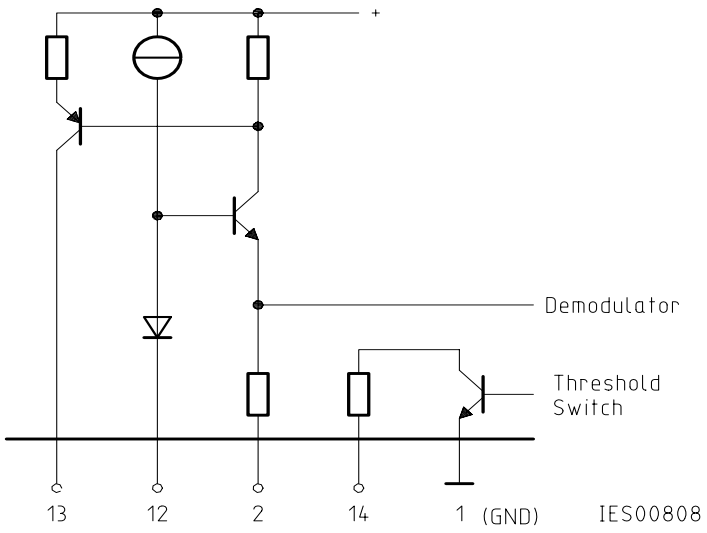

Turn-ON Delay for TCA 305 A; G

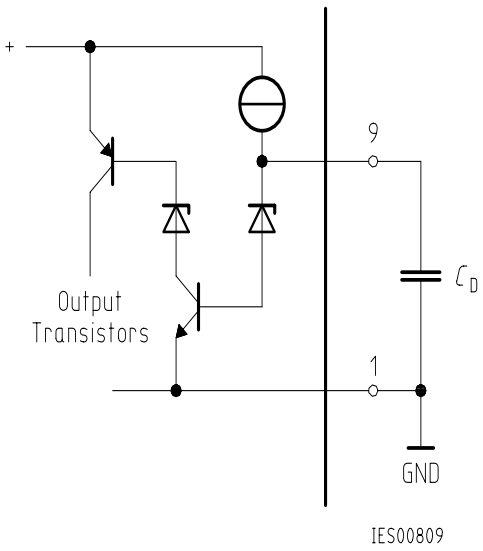

Integrating Capacitor

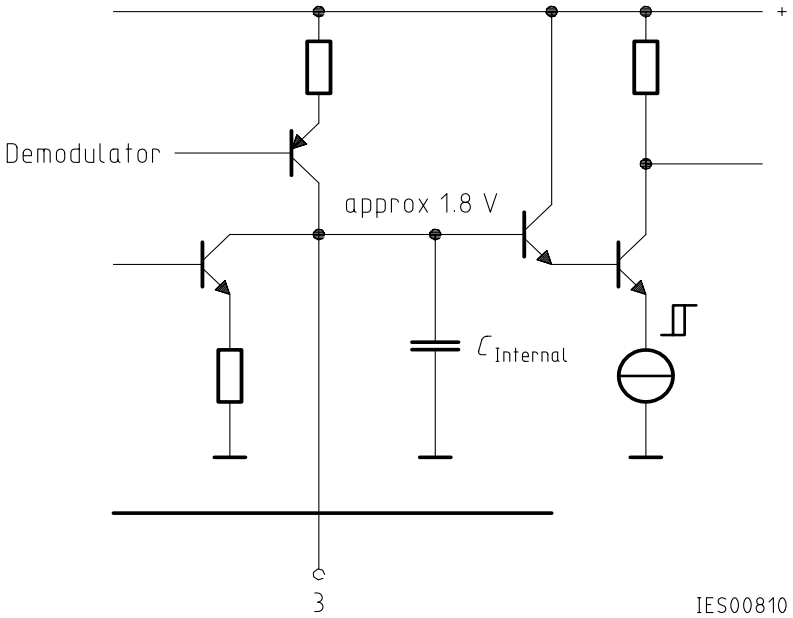

Outputs

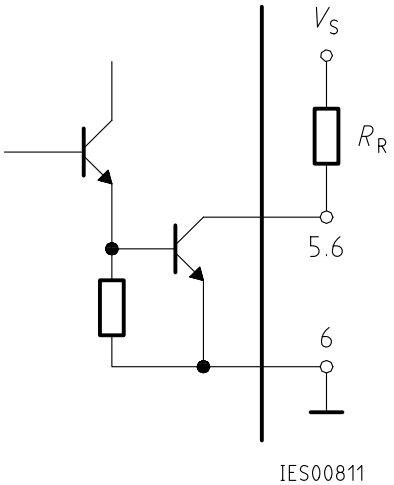

Schematic Circuit Diagram

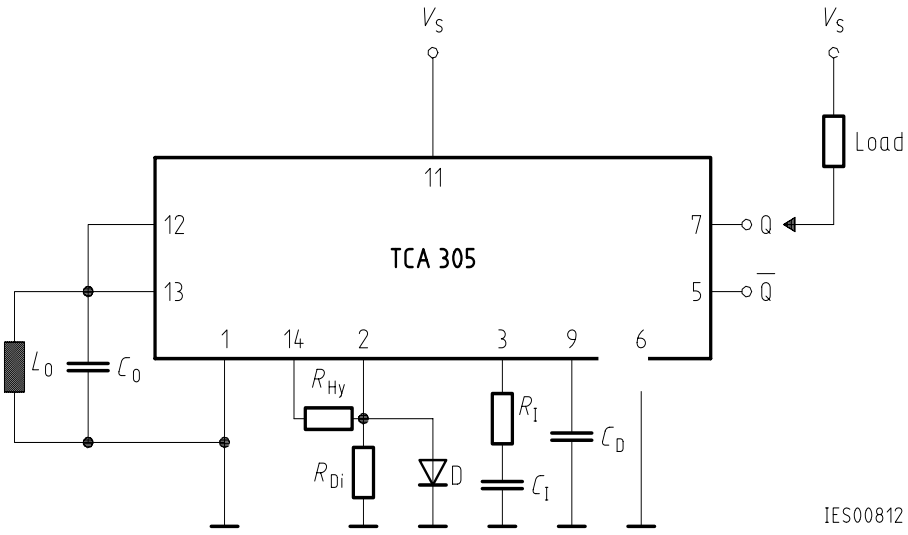

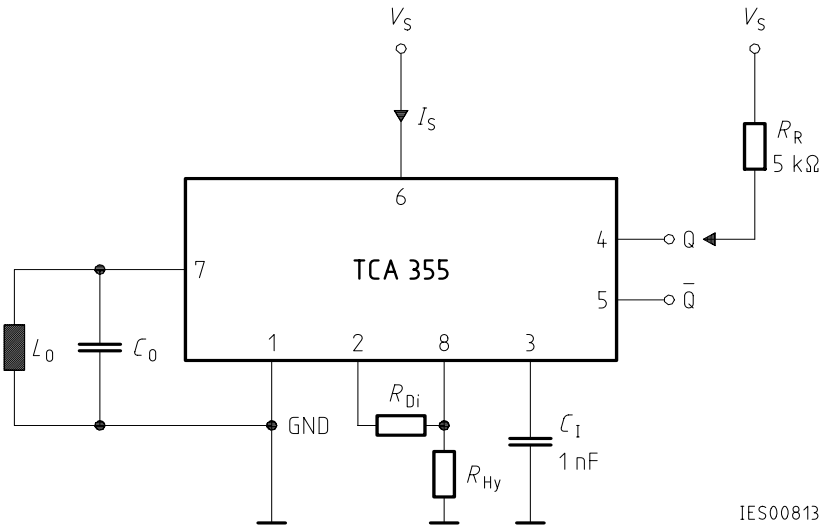

Application Circuit

L_0, C_0 Resonant circuit

R_{Hy} Hysteresis adjustment

R_{Di} Distance adjustment

D Temperature compensation of the resonant circuit; possibly with series resistance for the purpose of adjustment. The diode is not absolutely necessary. Whether it is used or not depends on the temperature coefficient of the resonant circuit.

R_I; C_I Integration element. At pin 3 (integrating capacitance) we recommend a capacitor of typ. 1 nF. To increase noise immunity this capacitor can be substituted by an RC circuit with, e.g., R_I = 1 MΩ and C_I = 10 nF.

C_D Delay capacitor

Dimensioning Examples in Accordance with CENELEC Standard (flush)

	M 12	M 18	M 30
Ferrite pot core	M 33 (7.35 × 3.6) mm	N 22 (14.4 × 7.5) mm	N 22 (25 × 8.9) mm
Number of turns	100	80	100
Cross section of wire	0.1 CuL	20 × 0.05	10 × 0.1
L_0	206 µH	268 µH	585 µH
C_0 (STYROFLEX®)	1000 pF	1.2 nF	3.3 nF
f_{OSC}	appr. 350 kHz	appr. 280 kHz	appr. 115 kHz
Sn	4 mm	8 mm	15 mm
R_A (Metal)	8.2 kΩ + 330 Ω	33 kΩ	22 kΩ + 2.7 kΩ
C_D	100 nF	100 nF	100 nF