SIEMENS

Dual Power Operational Amplifier

TCA 2365

Bipolar IC

Features

- High output peak current of twice 2.5 A
- Wide supply voltage range, 8 V to 32 V
- High slew rate 4 V/µs
- Outputs entirely protected (DC short-circuit proof)
- Thermal overload protection
- Inhibit input enables "tristate" outputs

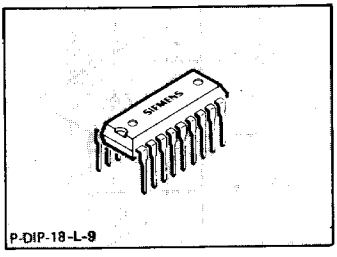

Applications

- Power comparator
- Power Schmitt trigger
- Speed control of DC motors

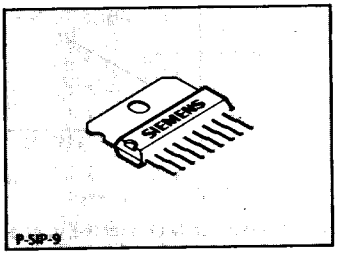

Type	Ordering Code	Package
S TCA 2365	Q67000-A1876	P-SIP-9
TCA 2365 A	Q67000-A8017	P-DIP-18-L-9

9

The TCA 2365 is a dual power op amp in a P-SIP-9 or P-DIP-18L-9 package. The IC contains two identical op amps, each supplying a high output peak current of 2.5 A at supply voltages between ±4 V and ±15 V. Both amplifiers can be disconnected simultaneously (tristate; $Z_Q \approx 4$ kΩ) via an inhibit input. Integrated protective circuits protect the outputs against short circuit to $+V_S$ and $-V_S$ and prevent thermal overloading of the IC.

Pin Configuration

TCA 2365 A

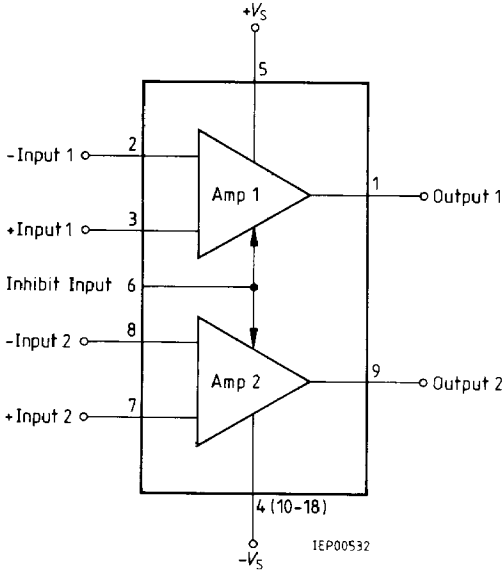

TCA 2365

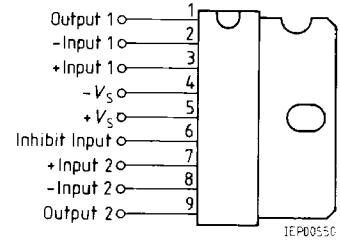

Pin 4 is electrically connected to cooling fin.
(Establish external connection between pin 4 and pin 10-18)

Absolute Maximum Ratings

Parameter	Symbol	Limit Values		Unit
		TCA 2365	TCA 2365 A	
Supply voltage	V_S	± 16	± 16	V
$t = 50$ ms	V_S	± 18	± 18	V
Differential input voltage	V_{ID}	$\pm V_S$	$\pm V_S$	V
Output voltage range	V_Q	$-V_S - 1$ to $+V_S + 1$		V
Peak output current	I_Q	± 2.5	± 2.5	A
Supply current	I_S	5.5	5.5	A
Junction temperature	T_j	150	150	°C
Storage temperature range	T_{stg}	−55 to 125	−55 to 125	°C
Thermal resistance				
junction – ambient	$R_{th\,jA}$	65	60	K/W
junction – case	$R_{th\,jC}$	6	10	K/W

Operating Range

Supply voltage	V_S	± 4 to ± 15	± 4 to ± 15	V
Case temperature $P_{tot} = 10.0$ W	T_C	−25 to 85	−25 to 85	°C
Voltage gain	$G_{V\,min}$	10	10	dB

Characteristics

$V_S = \pm 10$ V; $T_j = 25$ °C

Parameter	Symbol	Limit Values min.	typ.	max.	Unit	Test Circuit
Open-loop supply current consumption						
S1 in position 1	I_S		30	50	mA	1
S1 in position 2	I_{SM}		5	8	mA	1
Input offset voltage	V_{IO}	−10		10	mV	2
Input offset current	I_{IO}	−100		100	nA	3
Input current	I_I		0.25	1	µA	3
Output voltage						
($R_L = 12\ \Omega$; $f = 1$ kHz)	$V_{Q\ pp}$	±8.5	±9.0		V	4
($R_L = 4\ \Omega$; $f = 1$ kHz)	$V_{Q\ pp}$	±8.0	±8.5		V	4
($R_L = 470\ \Omega$; $f = 50$ kHz)	$V_{Q\ pp}$		±6.0		V	4
Input resistance ($f = 1$ kHz)	R_I	1	5		MΩ	4
Open-loop voltage gain ($f = 100$ Hz)	G_{V0}	70	80		dB	5
Common-mode input voltage range	V_{IC}	+7/−10	+7.5/−10.5		V	6
Common-mode rejection	k_{CMR}	70	80		dB	6
Supply voltage rejection	k_{SVR}	70	80		dB	7
Temperature coefficient of V_{IO} $-25\ °C \le T_j \le +85\ °C$	α_{VIO}		50		µV/K	2
Temperature coefficient of I_{IO} $-25\ °C \le T_j \le +85\ °C$	α_{IIO}		0.4		nA/K	3
Slew rate of V_q for non-inverting operation[1])	SR		4		V/µs	8
Slew rate of V_q for inverting operation[1])	SR		4		V/µs	9
Noise voltage referred to input	V_n		3		µV	1
Inhibit input (referred to $-V_S$)						
V_6 for IC turned off	$V_{6\ OFF}$	0		1.0	V	1
V_6 for IC turned on	$V_{6\ ON}$	3.0		6	V	1
Turn-on time ($\lvert I_{1;9} \rvert > 1$ A) referred to $V_{6\ OFF/ON}$	$t_{D\ ON}$		2	5	µs	1
Turn-off time ($\lvert I_{1;9} \rvert < 1$ A) referred to $V_{6\ OFF/ON}$	$t_{D\ OFF}$		15	30	µs	1
S2 and S3 in position 2						

[1]) For the relationship between power bandwidth and slew rate refer to **"General Information"**

Test Circuits

Figure 1
Open-Loop Supply Current Consumption, Noise Voltage, Turn-Off Voltage

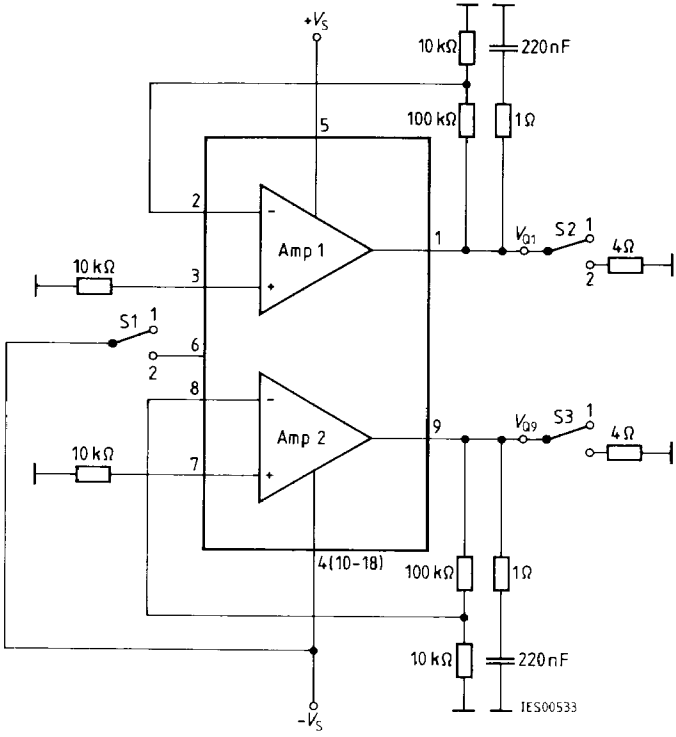

Switch as drawn unless otherwise specified.

Figure 2
Input Offset Voltage, Temperature Coefficient of V_{IO}

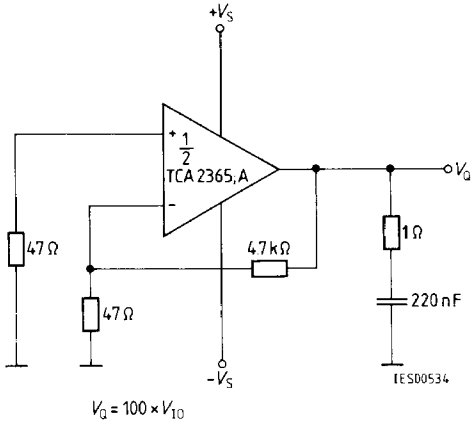

Figure 3
Input Offset Current, Input Current, Temperature Coefficient of I_{IO}

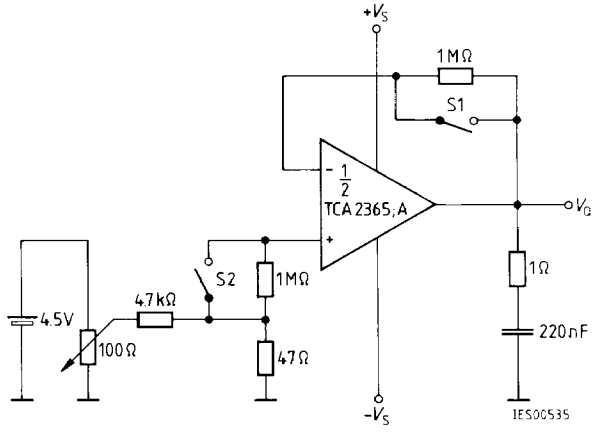

S1 open – S2 closed: $I_{I-} = \frac{V_Q}{1\ M\Omega}$

S2 open – S1 closed: $I_{I+} = \frac{V_Q}{1\ M\Omega}$

S1 open – S2 open: $I_{IO} = \frac{V_Q}{1\ M\Omega}$

S1 closed – S2 closed: offset alignment

Figure 4
Output Voltage, Input Resistance

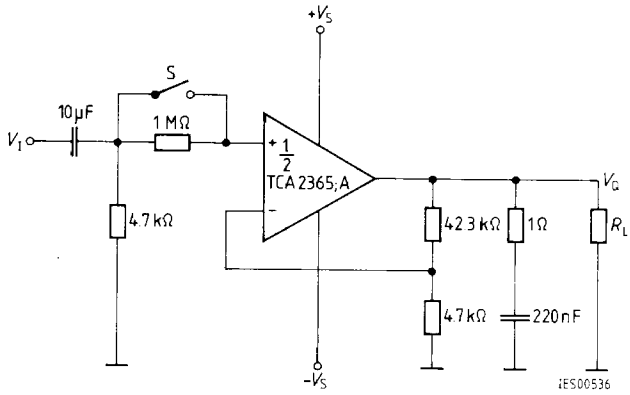

S closed : to measure $V_{Q_{pp}}$
S open / closed : to measure R_I

Figure 5
Open-Loop Voltage Gain

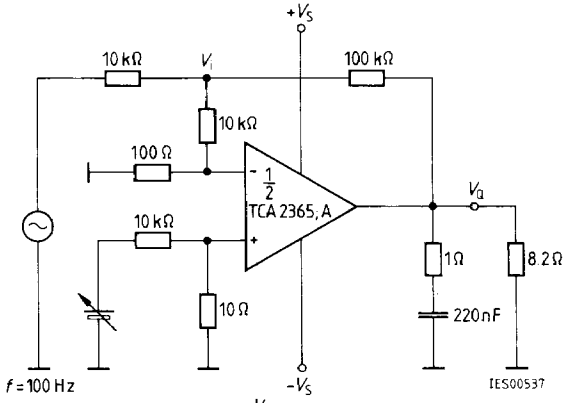

$$G_{V0} = \left| 20 \times \log 101 \frac{V_Q}{V_i} \right|$$

Figure 6
Common-Mode Voltage Gain G_{VC}
Common-Mode Rejection k_{CMR} (dB) = G_{V0} (dB) − G_{VC} (dB)

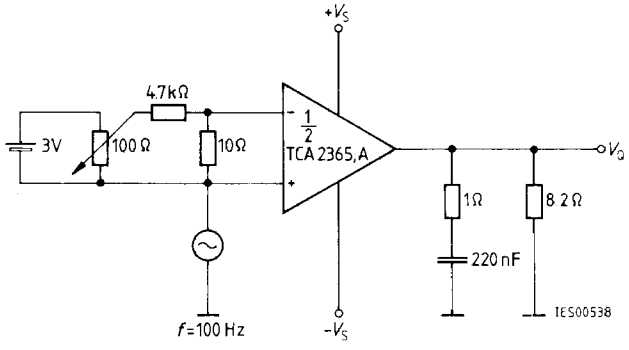

Figure 7
Supply Voltage Rejection

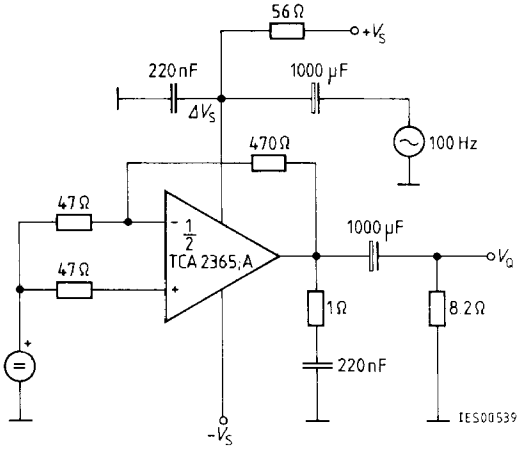

$$k_{SVR} = 20 \log \frac{\Delta V_Q}{G_V \cdot \Delta V_S} \text{ [dB]}$$

Figure 8
Slew Rate for Non-Inverting Operation

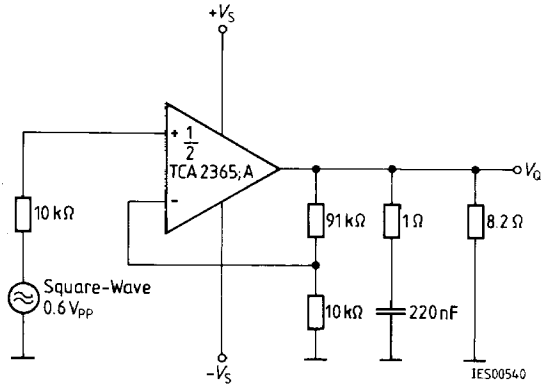

Figure 9
Slew Rate for Inverting Operation

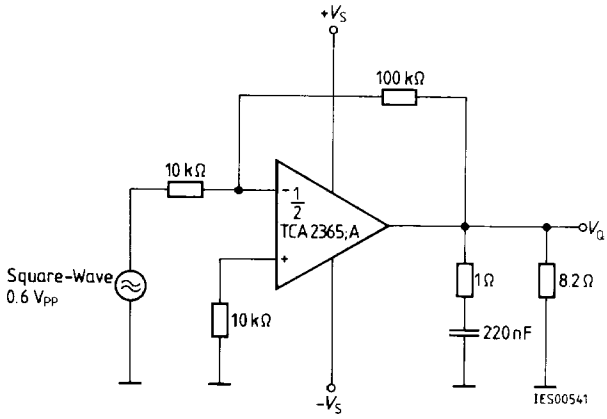

Supply Current I_S and I_{SM} versus Supply Voltage
$T_j = 25\,°C$

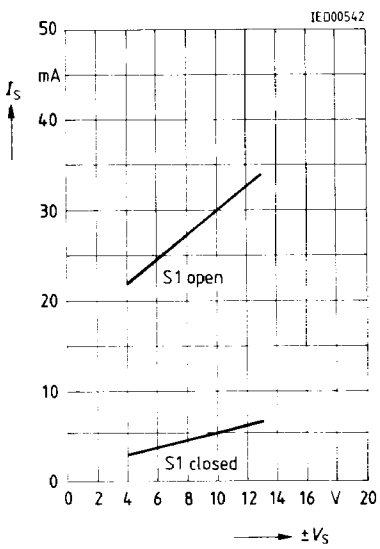

Input Current versus Junction Temperature

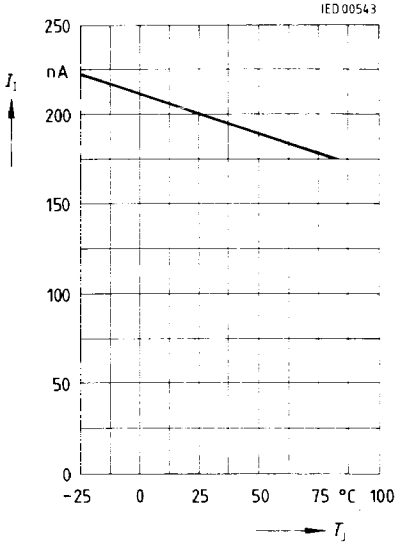

Open-Loop Voltage Gain versus Frequency
$T_j = 25\,°C$; $V_S = \pm 10$ V

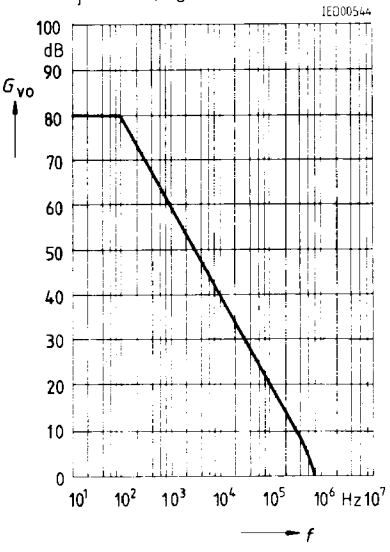

9

Phase Response versus Frequency
$T_j = 25\,°C$; $V_S = \pm 10\,V$

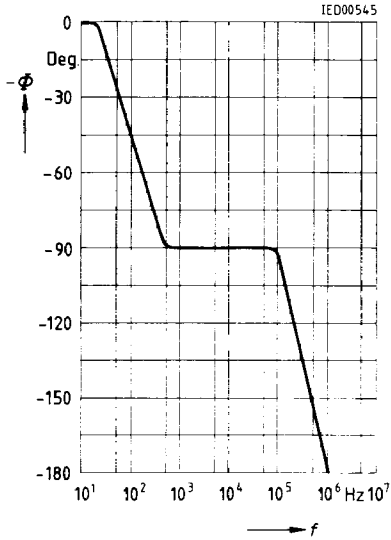

Common-Mode Rejection versus Junction Temperature
$V_S = \pm 10\,V$

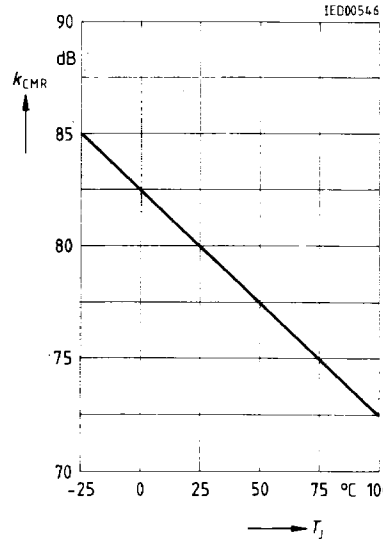

Max. Permissible Power Dissipation versus Case Temperature

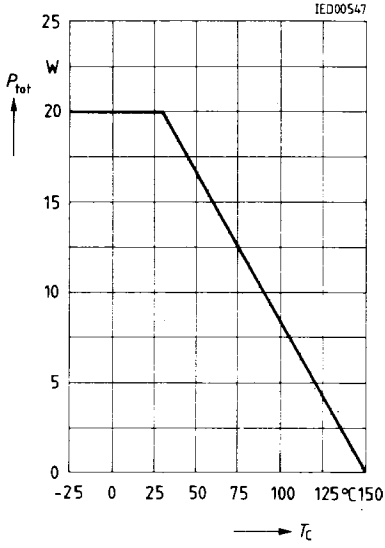

Max. Permissible Power Dissipation versus Case Temperature

