TC7660S

Super Charge Pump DC-to-DC Voltage Converter

Features

- Oscillator boost from 10 kHz to 45 kHz
- Converts +5V Logic Supply to ±5V System
- Wide Input Voltage Range: +1.5V to +12V
- Efficient Voltage Conversion (99.9%, typical)
- Excellent Power Efficiency (98%, typical)
- Low Power Consumption: 80 µA (typical) @ V_{IN} = 5V
- Low Cost and Easy to Use
  - Only Two External Capacitors Required
- Available in 8-Pin Small Outline (SOIC) and 8-Pin PDIP Packages
- Improved ESD Protection (10 kV HBM)
- No External Diode Required for High-Voltage Operation

Applications

- RS-232 Negative Power Supply
- Simple Conversion of +5V to ±5V Supplies
- Voltage Multiplication V_{OUT} = ± n V^+
- Negative Supplies for Data Acquisition Systems and Instrumentation

Package Types

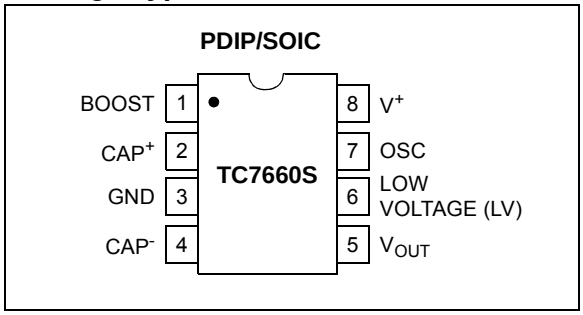

General Description

The TC7660S device is a pin-compatible replacement for the industry standard 7660 charge pump voltage converter. It converts a +1.5V to +12V input to a corresponding -1.5V to -12V output using only two low-cost capacitors, eliminating inductors and their associated cost, size and electromagnetic interference (EMI). Added features include an extended supply range to 12V, and a frequency boost pin for higher operating frequency, allowing the use of smaller external capacitors.

The on-board oscillator operates at a nominal frequency of 10 kHz. Frequency is increased to 45 kHz when pin 1 is connected to V^+. Operation below 10 kHz (for lower supply current applications) is possible by connecting an external capacitor from OSC to ground (with pin 1 open).

The TC7660S is available in 8-Pin PDIP and 8-Pin Small Outline (SOIC) packages in commercial and extended temperature ranges.

© 2001-2015 Microchip Technology Inc.

Functional Block Diagram

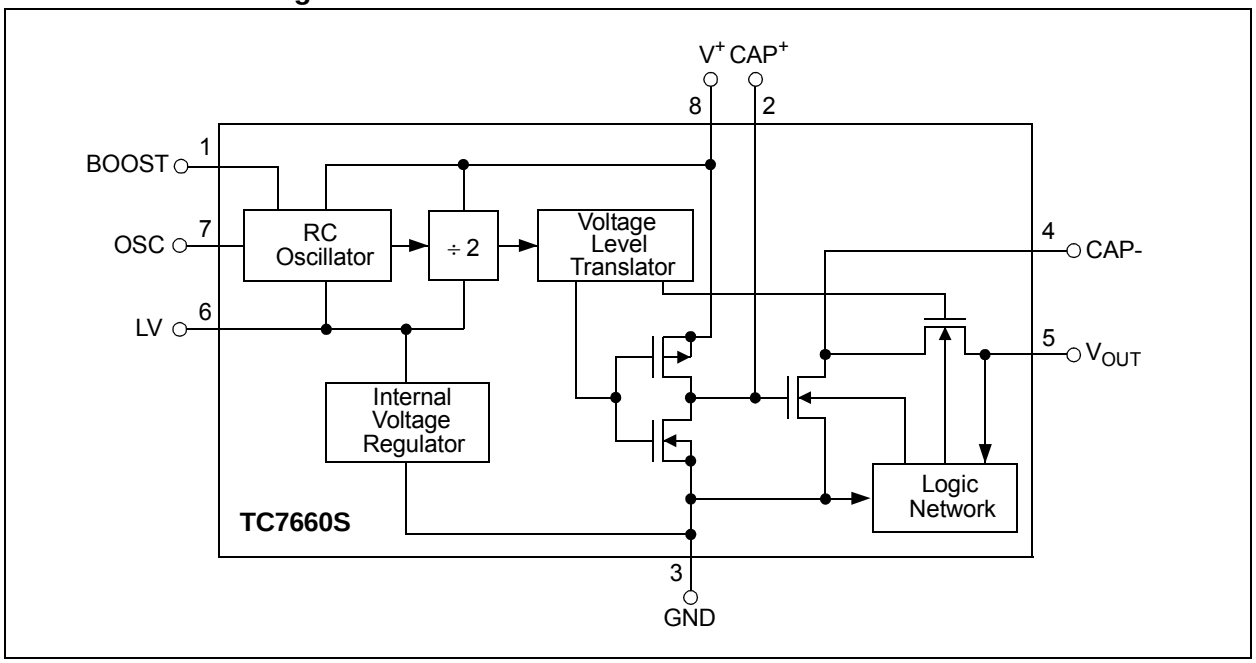

© 2001-2015 Microchip Technology Inc.

1.0 ELECTRICAL CHARACTERISTICS

Absolute Maximum Ratings†

Supply Voltage .....+13V
LV, Boost, and OSC Inputs Voltage: **(Note 1)**
.....-0.3V to (V^+ + 0.3V) for V^+ < 5.5V
..... (V^+ – 5.5V) to (V^+ + 0.3V) for V^+ > 5.5V
Current into LV .....20 µA for V^+ > 3.5V
Output Short Duration ($V_{SUPPLY} \leq 5.5V$).....Continuous
Package Power Dissipation: ($T_A \leq +70°C$) **(Note 2)**
8-Pin PDIP .....730 mW
8-Pin SOIC.....470 mW
Lead Temperature (Soldering, 10s) ..... +300°C

Notice†: Stresses above those listed under "Maximum Ratings" may cause permanent damage to the device. This is a stress rating only and functional operation of the device at those or any other conditions above those indicated in the operational sections of this specification is not intended. Exposure to maximum rating conditions for extended periods may affect device reliability.

Note 1: Connecting any input terminal to voltages greater than V^+ or less than GND may cause destructive latch-up. It is recommended that no inputs from sources operating from external supplies be applied prior to "power up" of the TC7660S.

2: Derate linearly above +50°C by 5.5 mW/°C.

ELECTRICAL SPECIFICATIONS

Electrical Characteristics: Unless otherwise noted, specifications measured over operating temperature range with V^+ = 5V, C_{OSC} = 0, refer to test circuit in Figure 4-1.

Parameters	Sym.	Min.	Typ.	Max.	Units	Conditions
Supply Current (Boost pin OPEN or GND)	I^+	—	80	160	µA	$R_L = \infty$
		—	—	180		0°C ≤ T_A ≤ +70°C
		—	—	180		-40°C ≤ T_A ≤ +85°C
		—	—	200		-55°C ≤ T_A ≤ +125°C
Supply Current (Boost pin = V^+)	I^+	—	—	300	µA	0°C ≤ T_A ≤ +70°C
		—	—	350		-40°C ≤ T_A ≤ +85°C
		—	—	400		-55°C ≤ T_A ≤ +125°C
Supply Voltage Range, High	V^+_H	3.0	—	12	V	Min. ≤ T_A ≤ Max, R_L = 10 kΩ, LV Open
Supply Voltage Range, Low	V^+_L	1.5	—	3.5	V	Min. ≤ T_A ≤ Max, R_L = 10 kΩ, LV to GND
Output Source Resistance	R_{OUT}	—	60	100	Ω	I_{OUT} = 20 mA
		—	70	120		I_{OUT} = 20 mA, 0°C ≤ T_A ≤ +70°C
		—	70	120		I_{OUT} = 20 mA, -40°C ≤ T_A ≤ +85°C
		—	105	150		I_{OUT} = 20 mA, -55°C ≤ T_A ≤ +125°C
		—	—	250		V^+ = 2V, I_{OUT} = 3 mA, LV to GND 0°C ≤ T_A ≤ +70°C
		—	—	400		V^+ = 2V, I_{OUT} = 3 mA, LV to GND -55°C ≤ T_A ≤ +125°C
Oscillator Frequency	f_{OSC}	—	10	—	kHz	Pin 7 open, Pin 1 open or GND
			45			Boost Pin = V^+
Power Efficiency	P_{EFF}	96	98	—	%	R_L = 5 kΩ; Boost Pin Open
		95	98	—		$T_{MIN} \leq T_A \leq T_{MAX}$; Boost Pin Open
		—	88	—		Boost Pin = V^+

© 2001-2015 Microchip Technology Inc.

ELECTRICAL SPECIFICATIONS (CONTINUED)

Electrical Characteristics: Unless otherwise noted, specifications measured over operating temperature range with V^+ = 5V, C_{OSC} = 0, refer to test circuit in Figure 4-1.

Parameters	Sym.	Min.	Typ.	Max.	Units	Conditions
Voltage Conversion Efficiency	V_{OUTEFF}	99	99.9	—	%	$R_L = \infty$
Oscillator Impedance	Z_{OSC}	—	1	—	MΩ	V^+ = 2V
		—	100	—	kΩ	V^+ = 5V

TEMPERATURE SPECIFICATIONS

Electrical Characteristics: Unless otherwise noted, specifications measured over operating temperature range with V^+ = 5V, C_{OSC} = 0, refer to test circuit in Figure 4-1.

Parameters	Sym.	Min.	Typ.	Max.	Units	Conditions
Temperature Ranges						
Operating Temperature Range	T_A	0	—	+70	°C	C suffix
	T_A	-40	—	+85	°C	E suffix
	T_A	-40	—	+125	°C	V suffix
Storage Temperature Range	T_A	-65	—	+150	°C	
Thermal Package Resistances						
Thermal Resistance, 8LD PDIP	θ_{JA}	—	89.3	—	°C/W	
Thermal Resistance, 8LD SOIC	θ_{JA}	—	148.5	—	°C/W	

© 2001-2015 Microchip Technology Inc.

2.0 TYPICAL PERFORMANCE CURVES

Note: The graphs and tables provided following this note are a statistical summary based on a limited number of samples and are provided for informational purposes only. The performance characteristics listed herein are not tested or guaranteed. In some graphs or tables, the data presented may be outside the specified operating range (e.g., outside specified power supply range) and therefore outside the warranted range.

Note: Unless otherwise indicated, $C_1 = C_2 = 10$ µF, $ESR_{C1} = ESR_{C2} = 1\ \Omega$, $T_A = 25°C$. See Figure 4-1.

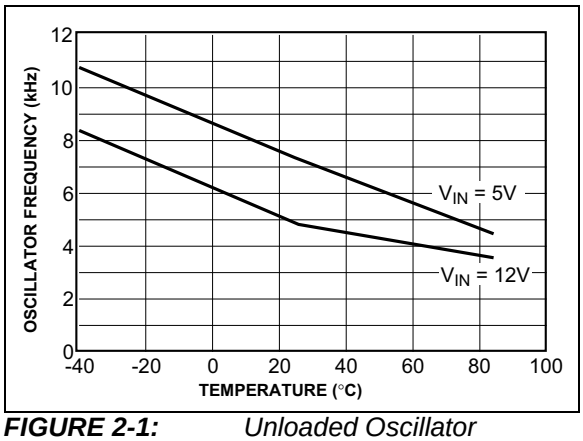

FIGURE 2-1: *Unloaded Oscillator Frequency vs. Temperature.*

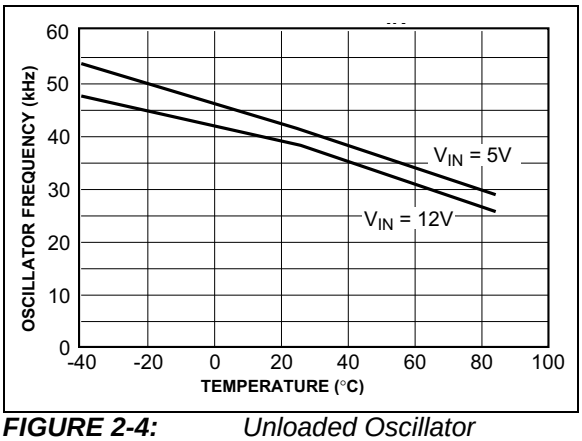

FIGURE 2-4: *Unloaded Oscillator Frequency vs. Temperature with Boost Pin = V_{IN}.*

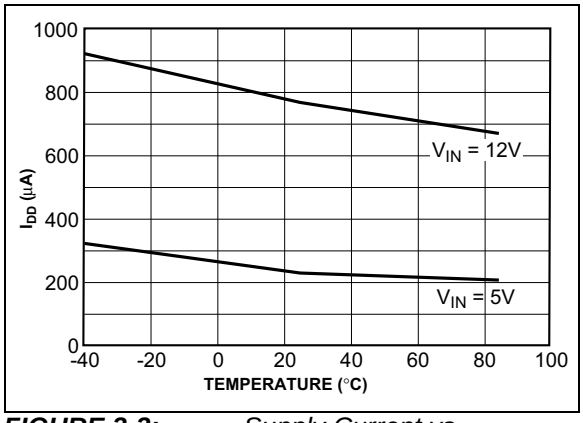

FIGURE 2-2: *Supply Current vs. Temperature (with Boost Pin = V_{IN}).*

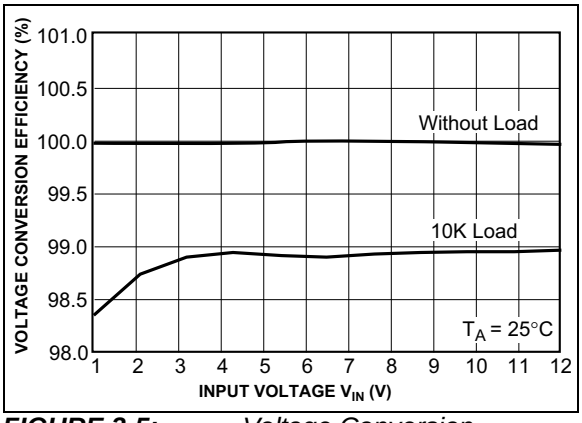

FIGURE 2-5: *Voltage Conversion.*

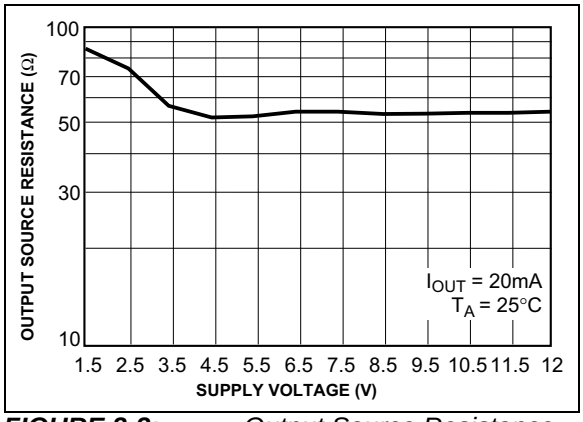

FIGURE 2-3: *Output Source Resistance vs. Supply Voltage.*

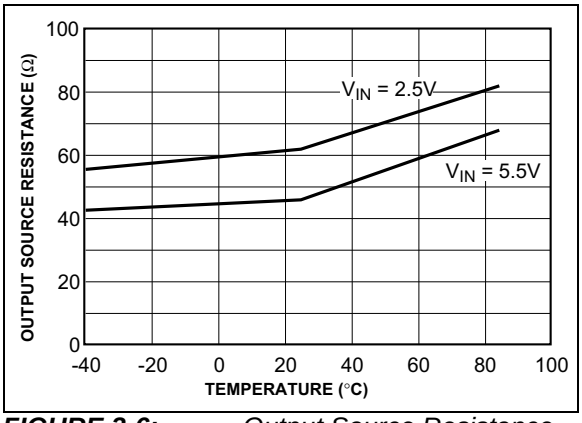

FIGURE 2-6: *Output Source Resistance vs. Temperature.*

Note: Unless otherwise indicated, $C_1 = C_2 = 10$ µF, $ESR_{C1} = ESR_{C2} = 1\ \Omega$, $T_A = 25°C$. See Figure 4-1.

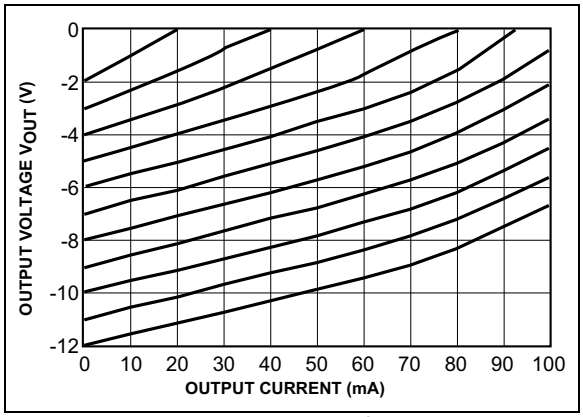

FIGURE 2-7: *Output Voltage vs. Output Current.*

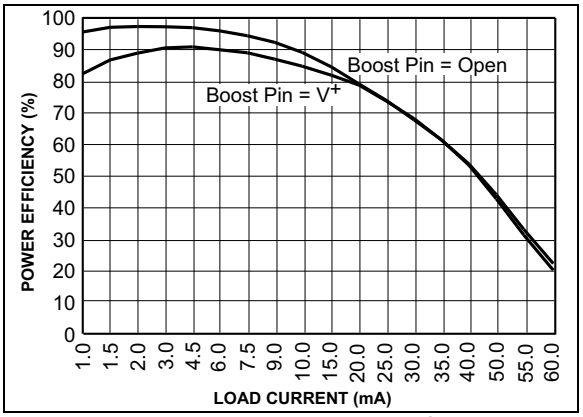

FIGURE 2-10: *Power Conversion Efficiency vs. Load.*

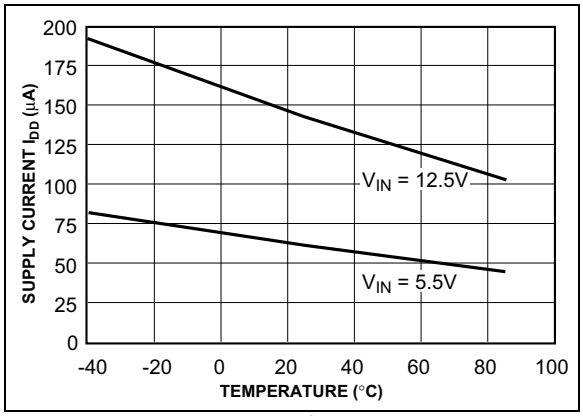

FIGURE 2-8: *Supply Current vs. Temperature.*

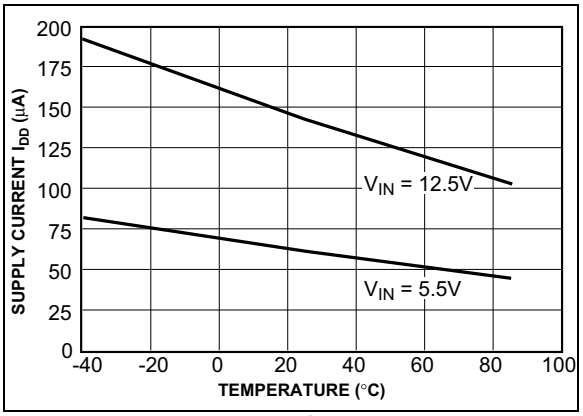

FIGURE 2-11: *Supply Current vs. Temperature.*

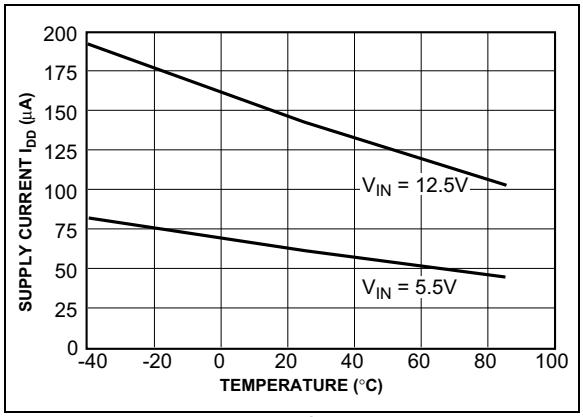

FIGURE 2-9: *Supply Current vs. Temperature.*

© 2001-2015 Microchip Technology Inc.

3.0 PIN DESCRIPTIONS

The descriptions of the pins are listed in Table 3-1.

TABLE 3-1: PIN FUNCTION TABLE

Pin No.	Symbol	Description
1	BOOST	Switching Frequency boost pin
2	CAP^+	Charge pump capacitor positive terminal
3	GND	Ground terminal
4	CAP^-	Charge pump capacitor negative terminal
5	V_{OUT}	Output voltage
6	LV	Low voltage pin. Connect to GND for V+ < 3.5V
7	OSC	Oscillator control input. Bypass with an external capacitor to slow the oscillator.
8	V^+	Power supply positive voltage input

3.1 Switching Frequency Boost Pin (Boost)

By connecting the boost pin (pin 1), the switching frequency of the charge pump is increased from 10 kHz typical to 45 kHz typical. By connecting the boost pin (pin1), to the V^+ pin (pin 8), the switching frequency of the charge pump is increased from 10 kHz typical to 45 kHz typical.

3.2 Charge Pump Capacitor (CAP^+)

Positive connection for the charge pump capacitor, or flying capacitor, used to transfer charge from the input source to the output. In the voltage-inverting configuration, the charge pump capacitor is charged to the input voltage during the first half of the switching cycle. During the second half of the switching cycle, the charge pump capacitor is inverted and charge is transferred to the output capacitor and load.

It is recommended that a low ESR (equivalent series resistance) capacitor be used. Additionally, larger values will lower the output resistance.

3.3 Ground (GND)

Input and output zero volt reference.

3.4 Charge Pump Capacitor (CAP^-)

Negative connection for the charge pump capacitor, or flying capacitor, used to transfer charge from the input to the output. Proper orientation is imperative when using a polarized capacitor.

3.5 Output Voltage (V_{OUT})

Negative connection for the charge pump output capacitor. In the voltage-inverting configuration, the charge pump output capacitor supplies the output load during the first half of the switching cycle. During the second half of the switching cycle, charge is restored to the charge pump output capacitor.

It is recommended that a low ESR capacitor be used. Additionally, larger values will lower the output ripple.

3.6 Low Voltage Pin (LV)

The low voltage pin ensures proper operation of the internal oscillator for input voltages below 3.5V. The low voltage pin should be connected to ground (GND) for input voltages below 3.5V. Otherwise, the low voltage pin should be allowed to float.

3.7 Oscillator Control Input (OSC)

The oscillator control input can be utilized to slow down or speed up the operation of the TC7660S. Refer to **Section 5.4 "Changing the TC7660S Oscillator Frequency"**, for details on altering the oscillator frequency.

3.8 Power Supply (V^+)

Positive power supply input voltage connection. It is recommended that a low ESR capacitor be used to bypass the power supply input to ground (GND).

© 2001-2015 Microchip Technology Inc.

4.0 DETAILED DESCRIPTION

4.1 Theory of Operation

The TC7660S contains all the necessary circuitry to implement a voltage inverter, with the exception of two external capacitors, which may be inexpensive 10 µF polarized electrolytic capacitors. Operation is best understood by considering Figure 4-2, which shows an idealized voltage inverter. Capacitor C_1 is charged to a voltage V^+ for the half cycle when switches S_1 and S_3 are closed. (Note that switches S_2 and S_4 are open during this half cycle.) During the second half cycle of operation, switches S_2 and S_4 are closed, with S_1 and S_3 open, thereby shifting capacitor C_1 negatively by V^+ volts. Charge is then transferred from C_1 negatively by V^+ volts. Charge is then transferred from C_1 to C_2, such that the voltage on C_2 is exactly V^+ assuming ideal switches and no load on C_2.

The four switches in Figure 4-2 are MOS power switches; S_1 is a P-channel device, and S_2, S_3 and S_4 are N-channel devices. The main difficulty with this approach is that in integrating the switches, the substrates of S_3 and S_4 must always remain reverse-biased with respect to their sources, but not so much as to degrade their ON resistances. In addition, at circuit start-up, and under output short circuit conditions ($V_{OUT} = V^+$), the output voltage must be sensed and the substrate bias adjusted accordingly. Failure to accomplish this will result in high power losses and probable device latch-up.

This problem is eliminated in the TC7660S by a logic network which senses the output voltage (V_{OUT}) together with the level translators, and switches the substrates of S_3 and S_4 to the correct level to maintain necessary reverse bias.

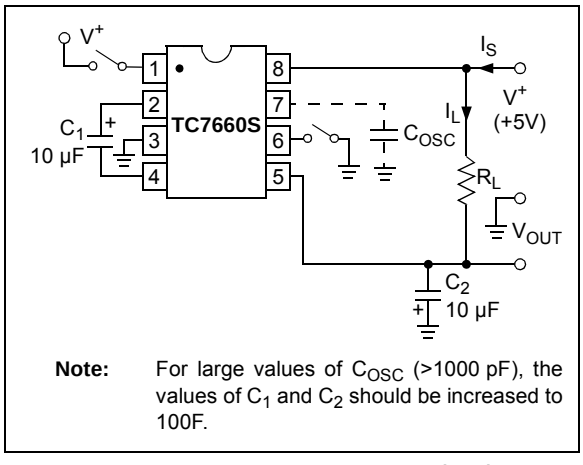

Note: For large values of C_{OSC} (>1000 pF), the values of C_1 and C_2 should be increased to 100F.

FIGURE 4-1: *TC7660S Test Circuit.*

The voltage regulator portion of the TC7660S is an integral part of the anti-latch-up circuitry. Its inherent voltage drop can, however, degrade operation at low voltages.

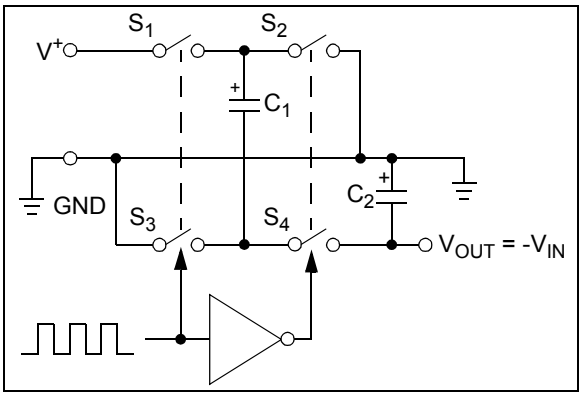

FIGURE 4-2: *Ideal Charge Pump Inverter.*

To improve low-voltage operation, the “LV” pin should be connected to GND, disabling the regulator. For supply voltages greater than 3.5V, the LV terminal must be left open to ensure latch-up-proof operation and prevent device damage.

4.2 Theoretical Power Efficiency Considerations

In theory, a capacitive charge pump can approach 100% efficiency if certain conditions are met:

(1) The drive circuitry consumes minimal power.

(2) The output switches have extremely low ON resistance and virtually no offset.

(3) The impedances of the pump and reservoir capacitors are negligible at the pump frequency.

The TC7660S approaches these conditions for negative voltage multiplication if large values of C_1 and C_2 are used. Energy is lost only in the transfer of charge between capacitors if a change in voltage occurs. The energy lost is defined by:

$$E = 1/2\ C_1\ (V_1^2 - V_2^2)$$

V_1 and V_2 are the voltages on C_1 during the pump and transfer cycles. If the impedances of C_1 and C_2 are relatively high at the pump frequency (refer to Figure 4-2) compared to the value of R_L, there will be a substantial difference in voltages V_1 and V_2. Therefore, it is desirable not only to make C_2 as large as possible to eliminate output voltage ripple, but also to employ a correspondingly large value for C_1 in order to achieve maximum efficiency of operation.

4.3 Dos and Don'ts

- Do not exceed maximum supply voltages.
- Do not connect the LV terminal to GND for supply voltages greater than 3.5V.
- Do not short circuit the output to V^+ supply for voltages above 5.5V for extended periods; however, transient conditions including start-up are okay.
- When using polarized capacitors in the inverting mode, the + terminal of C_1 must be connected to pin 2 of the TC7660S and the + terminal of C_2 must be connected to GND.

© 2001-2015 Microchip Technology Inc.

5.0 APPLICATIONS INFORMATION

5.1 Simple Negative Voltage Converter

Figure 5-1 shows typical connections to provide a negative supply where a positive supply is available. A similar scheme may be employed for supply voltages anywhere in the operating range of +1.5V to +12V, keeping in mind that pin 6 (LV) is tied to the supply negative (GND) only for supply voltages below 3.5V.

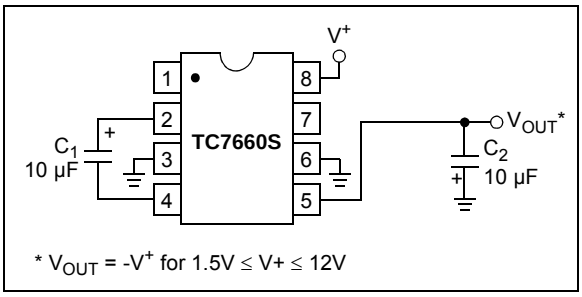

FIGURE 5-1: *Simple Negative Converter.*

The output characteristics of the circuit in Figure 5-1 are those of a nearly ideal voltage source in series with a 70Ω resistor. Thus, for a load current of -10 mA and a supply voltage of +5V, the output voltage would be -4.3V.

The dynamic output impedance of the TC7660S is due, primarily, to capacitive reactance of the charge transfer capacitor (C_1). Since this capacitor is connected to the output for only half of the cycle, the equation is:

EQUATION

$$X_C = \frac{2}{2fC_1} = 3.18\Omega$$

where:

f = 10 kHz and C1 = 10 µF.

5.2 Paralleling Devices

Any number of TC7660S voltage converters may be paralleled to reduce output resistance (Figure 5-2). The reservoir capacitor, C_2, serves all devices, while each device requires its own pump capacitor, C_1. The resultant output resistance would be approximately:

EQUATION

$$R_{OUT} = \frac{R_{OUT}\,(of\ TC7660S)}{n\,(number\ of\ devices)}$$

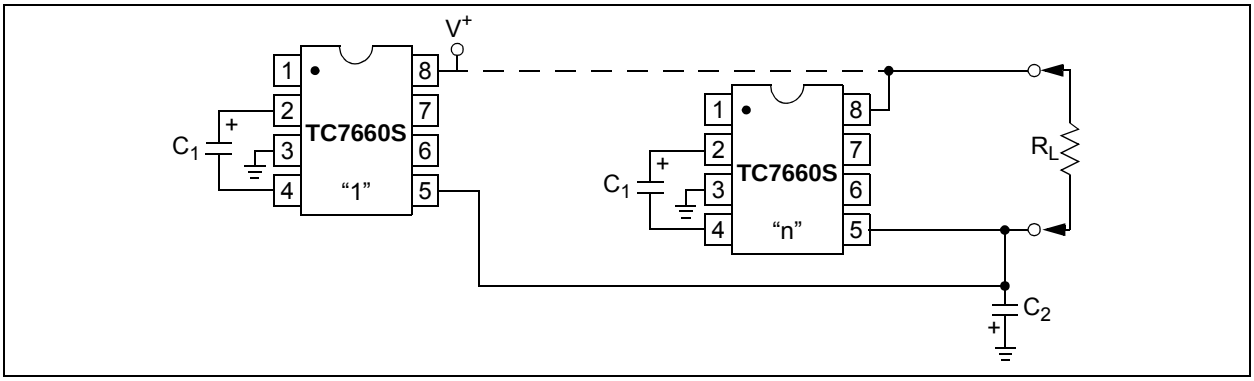

FIGURE 5-2: *Paralleling Devices Lowers Output Impedance.*

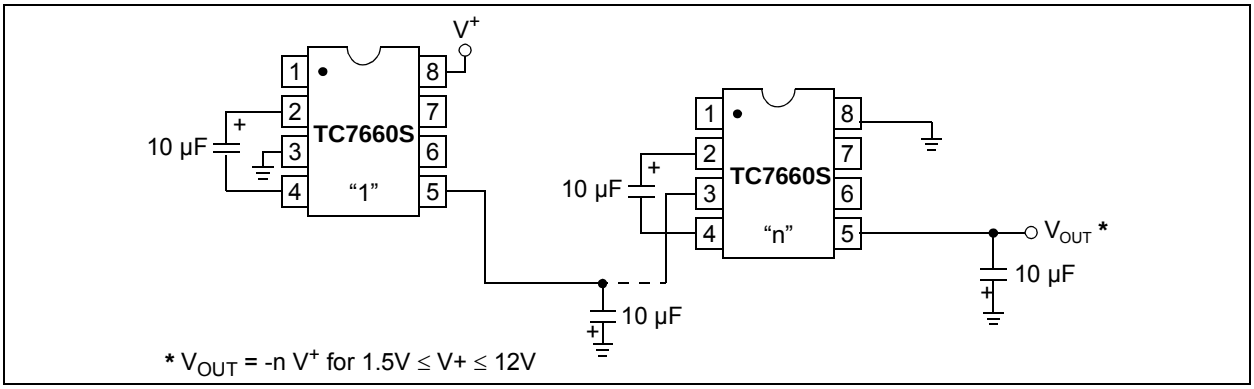

FIGURE 5-3: *Increased Output Voltage By Cascading Devices.*

5.3 Cascading Devices

The TC7660S may be cascaded as shown (Figure 5-3) to produce larger negative multiplication of the initial supply voltage. However, due to the finite efficiency of each device, the practical limit is 10 devices for light loads. The output voltage is defined by:

EQUATION

$$V_{OUT} = -n(V^+)$$

where n is an integer representing the number of devices cascaded. The resulting output resistance would be approximately the weighted sum of the individual TC7660S R_{OUT} values.

5.4 Changing the TC7660S Oscillator Frequency

It may be desirable in some applications (due to noise or other considerations) to increase the oscillator frequency. Pin 1, frequency boost pin, may be connected to V^+ to increase oscillator frequency to 45 kHz from a nominal of 10 kHz for an input supply voltage of 5.0V. The oscillator may also be synchronized to an external clock as shown in Figure 5-4. In order to prevent possible device latch-up, a 1 kΩ resistor must be used in series with the clock output. In a situation where the designer has generated the external clock frequency using TTL logic, the addition of a 10 kΩ pull-up resistor to V^+ supply is required. Note that the pump frequency with external clocking, as with internal clocking, will be half of the clock frequency. Output transitions occur on the positive-going edge of the clock.

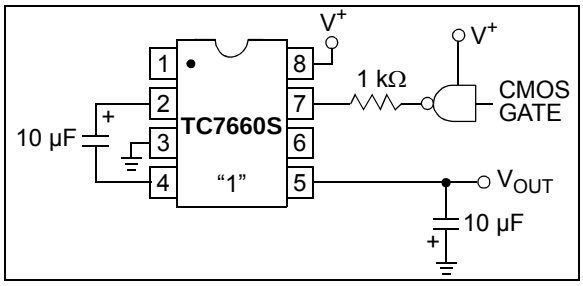

FIGURE 5-4: *External Clocking.*

It is also possible to increase the conversion efficiency of the TC7660S at low load levels by lowering the oscillator frequency. This reduces the switching losses, and is achieved by connecting an additional capacitor, C_{OSC}, as shown in Figure 5-5. Lowering the oscillator frequency will cause an undesirable increase in the impedance of the pump (C_1) and the reservoir (C_2) capacitors. To overcome this, increase the values of C_1 and C_2 by the same factor that the frequency has been reduced. For example, the addition of a 100 pF capacitor between pin 7 (OSC) and pin 8 (V^+) will lower the oscillator frequency to 1 kHz from its nominal frequency of 10 kHz (a multiple of 10), and necessitate a corresponding increase in the values of C_1 and C_2 (from 10 µF to 100 µF).

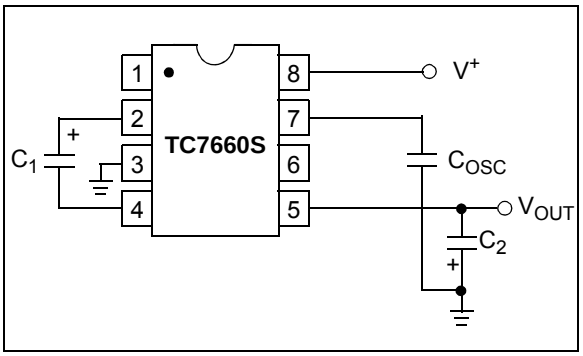

FIGURE 5-5: *Lowering Oscillator Frequency.*

5.5 Positive Voltage Multiplication

The TC7660S may be employed to achieve positive voltage multiplication using the circuit shown in Figure 5-6. In this application, the pump inverter switches of the TC7660S are used to charge C_1 to a voltage level of $V^+ – V_F$ (where V^+ is the supply voltage and V_F is the forward voltage drop of diode D_1). On the transfer cycle, the voltage on C_1 plus the supply voltage (V^+) is applied through diode D_2 to capacitor C_2. The voltage thus created on C_2 becomes $(2V^+) – (2V_F)$, or twice the supply voltage minus the combined forward voltage drops of diodes D_1 and D_2.

The source impedance of the output (V_{OUT}) will depend on the output current, but for V^+ = 5V and an output current of 10 mA, it will be approximately 60Ω.

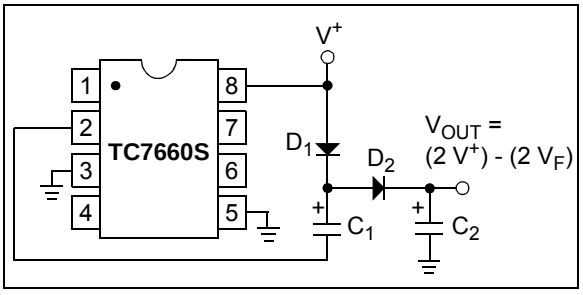

FIGURE 5-6: *Positive Voltage Multiplier.*

© 2001-2015 Microchip Technology Inc.

5.6 Combined Negative Voltage Conversion and Positive Supply Multiplication

Figure 5-7 combines the functions shown in Figure 5-3 and Figure 5-6 to provide negative voltage conversion and positive voltage multiplication simultaneously. For example, this approach would be suitable for generating +9V and -5V from an existing +5V supply. In this instance, capacitors C_1 and C_3 perform the pump and reservoir functions, respectively, for the generation of the negative voltage, while capacitors C_2 and C_4 are pump and reservoir, respectively, for the multiplied positive voltage. There is a penalty in this configuration which combines both functions, however, in that the source impedances of the generated supplies will be somewhat higher due to the finite impedance of the common charge pump driver at pin 2 of the device.

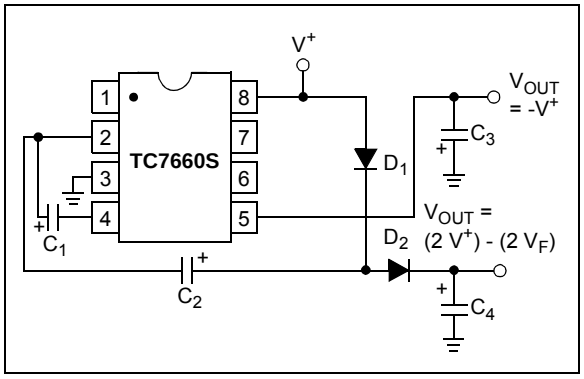

FIGURE 5-7: *Combined Negative Converter and Positive Multiplier.*

5.7 Efficient Positive Voltage Multiplication/Conversion

Since the switches that allow the charge pumping operation are bidirectional, the charge transfer can be performed backwards as easily as forwards. Figure 5-8 shows a TC7660S transforming -5V to +5V (or +5V to +10V, etc.). The only problem is that the internal clock and switch-drive section will not operate until some positive voltage has been generated. An initial inefficient pump, as shown in Figure 5-7, could be used to start this circuit up, after which it will bypass the other (D_1 and D_2 in Figure 5-7 would never turn on), or else the diode and resistor shown dotted in Figure 5-8 can be used to "force" the internal regulator on.

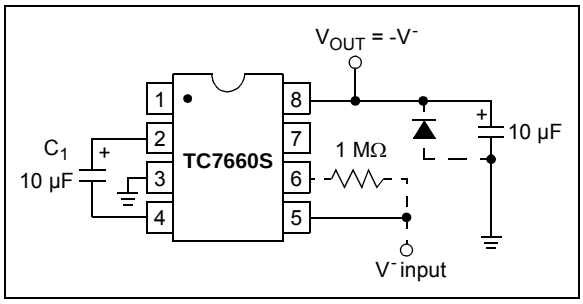

FIGURE 5-8: *Positive Voltage Conversion.*

5.8 Voltage Splitting

The same bidirectional characteristics used in Figure 5-8 can also be used to split a higher supply in half, as shown in Figure 5-9. The combined load will be evenly shared between the two sides. Once again, a high value resistor to the LV pin ensures start-up. Because the switches share the load in parallel, the output impedance is much lower than in the standard circuits, and higher currents can be drawn from the device. By using this circuit, and then the circuit of Figure 5-3, +15V can be converted (via +7.5V and -7.5V) to a nominal -15V, though with rather high series resistance (~250Ω).

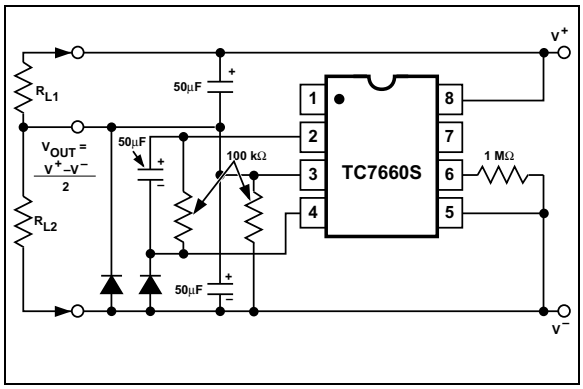

FIGURE 5-9: *Splitting a Supply in Half.*

5.9 Negative Voltage Generation for Display ADCs

The TC7106 is designed to work from a 9V battery. With a fixed power supply system, the TC7106 will perform conversions with input signal referenced to power supply ground.

5.10 Negative Supply Generation for 4½ Digit Data Acquisition System

The TC7135 is a 4½ digit ADC operating from ±5V supplies. The TC7660S provides an inexpensive -5V source. (See AN16 and AN17 for TC7135 interface details and software routines.)

© 2001-2015 Microchip Technology Inc.

6.0 PACKAGING INFORMATION

6.1 Package Marking Information

8-Lead PDIP (300 mil)

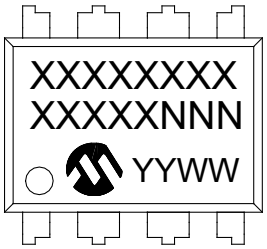

Example

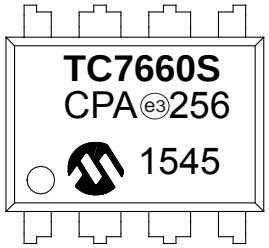

Example

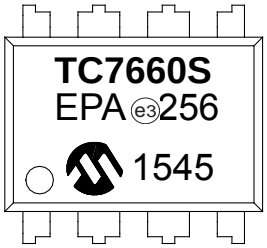

8-Lead SOIC (3.90 mm)

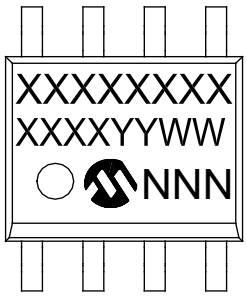

Example

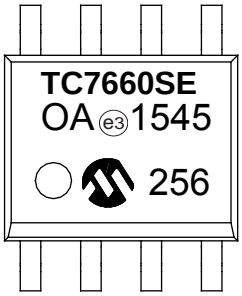

Legend:	XX...X	Customer-specific information
	Y	Year code (last digit of calendar year)
	YY	Year code (last 2 digits of calendar year)
	WW	Week code (week of January 1 is week ‘01’)
	NNN	Alphanumeric traceability code
	(e3)	Pb-free JEDEC designator for Matte Tin (Sn)
	*	This package is Pb-free. The Pb-free JEDEC designator ((e3)) can be found on the outer packaging for this package.

Note: In the event the full Microchip part number cannot be marked on one line, it will be carried over to the next line thus limiting the number of available characters for customer specific information.

© 2001-2015 Microchip Technology Inc.

8-Lead Plastic Dual In-Line (PA) - 300 mil Body [PDIP]

Note:	For the most current package drawings, please see the Microchip Packaging Specification located at http://www.microchip.com/packaging

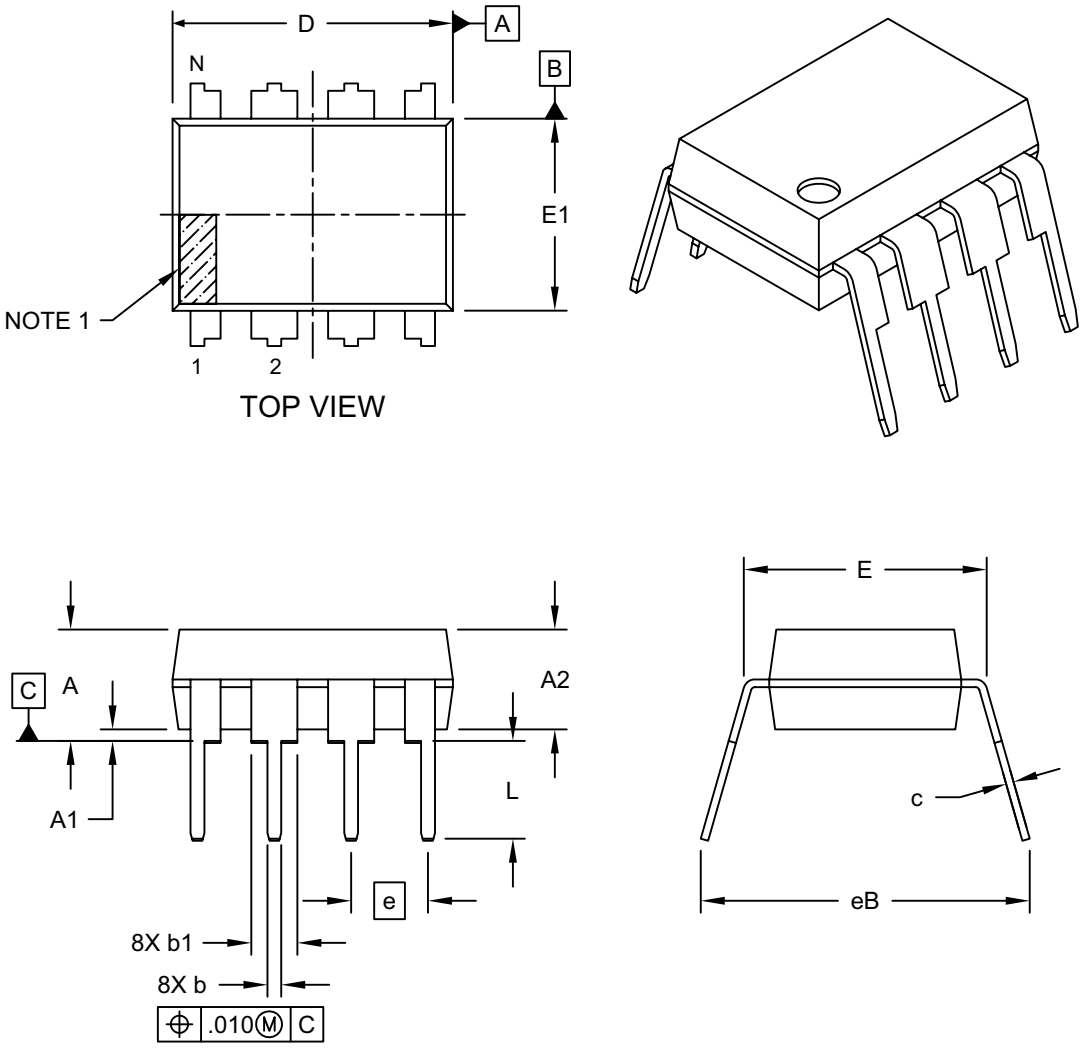

Microchip Technology Drawing No. C04-018D Sheet 1 of 2

8-Lead Plastic Dual In-Line (PA) - 300 mil Body [PDIP]

Note: For the most current package drawings, please see the Microchip Packaging Specification located at http://www.microchip.com/packaging

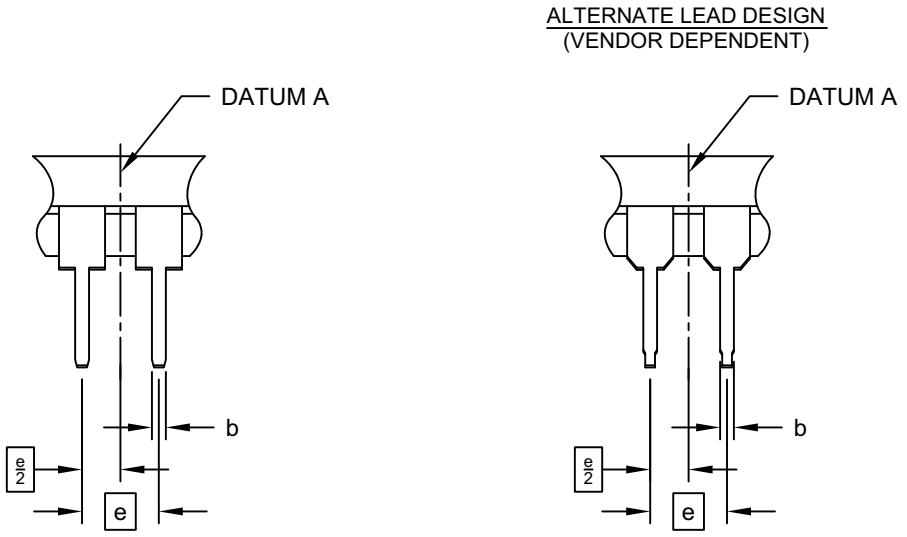

Units		INCHES		
Dimension Limits		MIN	NOM	MAX
Number of Pins	N		8	
Pitch	e		.100 BSC	
Top to Seating Plane	A	-	-	.210
Molded Package Thickness	A2	.115	.130	.195
Base to Seating Plane	A1	.015	-	-
Shoulder to Shoulder Width	E	.290	.310	.325
Molded Package Width	E1	.240	.250	.280
Overall Length	D	.348	.365	.400
Tip to Seating Plane	L	.115	.130	.150
Lead Thickness	c	.008	.010	.015
Upper Lead Width	b1	.040	.060	.070
Lower Lead Width	b	.014	.018	.022
Overall Row Spacing §	eB	-	-	.430

Notes:

1. Pin 1 visual index feature may vary, but must be located within the hatched area.
2. § Significant Characteristic
3. Dimensions D and E1 do not include mold flash or protrusions. Mold flash or protrusions shall not exceed .010" per side.
4. Dimensioning and tolerancing per ASME Y14.5M

   BSC: Basic Dimension. Theoretically exact value shown without tolerances.

Microchip Technology Drawing No. C04-018D Sheet 2 of 2

© 2001-2015 Microchip Technology Inc.

8-Lead Plastic Small Outline (OA) - Narrow, 3.90 mm Body [SOIC]

Note: For the most current package drawings, please see the Microchip Packaging Specification located at http://www.microchip.com/packaging

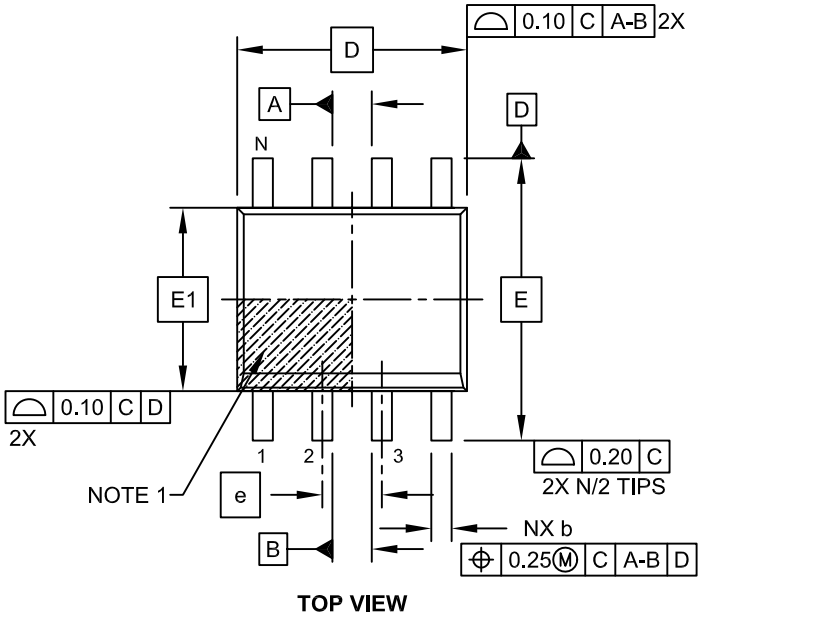

TOP VIEW

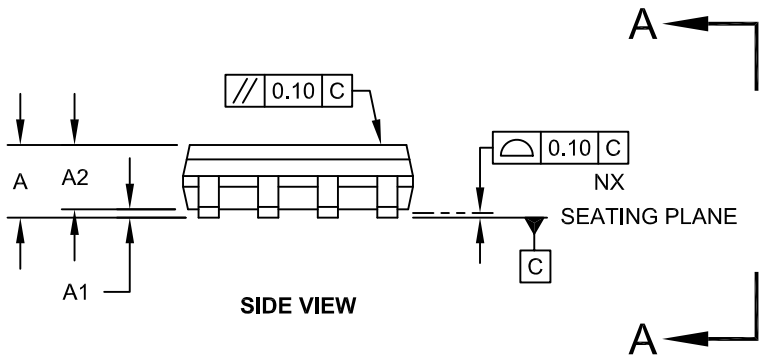

SIDE VIEW

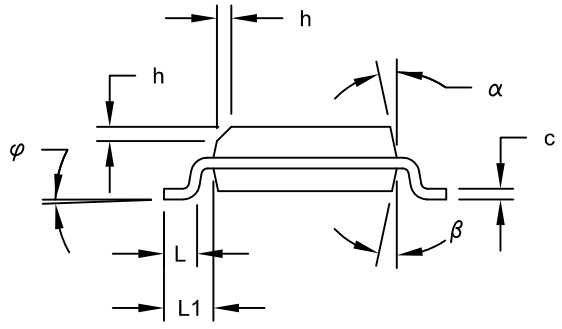

VIEW A-A

Microchip Technology Drawing No. C04-057C Sheet 1 of 2

8-Lead Plastic Small Outline (OA) - Narrow, 3.90 mm Body [SOIC]

Note: For the most current package drawings, please see the Microchip Packaging Specification located at http://www.microchip.com/packaging

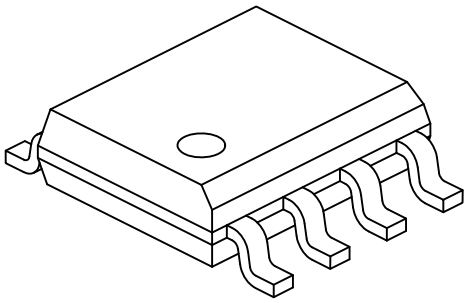

Units		MILLIMETERS		
Dimension Limits		MIN	NOM	MAX
Number of Pins	N		8	
Pitch	e		1.27 BSC	
Overall Height	A	-	-	1.75
Molded Package Thickness	A2	1.25	-	-
Standoff §	A1	0.10	-	0.25
Overall Width	E		6.00 BSC	
Molded Package Width	E1		3.90 BSC	
Overall Length	D		4.90 BSC	
Chamfer (Optional)	h	0.25	-	0.50
Foot Length	L	0.40	-	1.27
Footprint	L1		1.04 REF	
Foot Angle	φ	0°	-	8°
Lead Thickness	c	0.17	-	0.25
Lead Width	b	0.31	-	0.51
Mold Draft Angle Top	α	5°	-	15°
Mold Draft Angle Bottom	β	5°	-	15°

Notes:

1. Pin 1 visual index feature may vary, but must be located within the hatched area.
2. § Significant Characteristic
3. Dimensions D and E1 do not include mold flash or protrusions. Mold flash or protrusions shall not exceed 0.15mm per side.
4. Dimensioning and tolerancing per ASME Y14.5M

BSC: Basic Dimension. Theoretically exact value shown without tolerances.
REF: Reference Dimension, usually without tolerance, for information purposes only.

Microchip Technology Drawing No. C04-057C Sheet 2 of 2

© 2001-2015 Microchip Technology Inc.

8-Lead Plastic Small Outline (OA) – Narrow, 3.90 mm Body [SOIC]

Note: For the most current package drawings, please see the Microchip Packaging Specification located at http://www.microchip.com/packaging

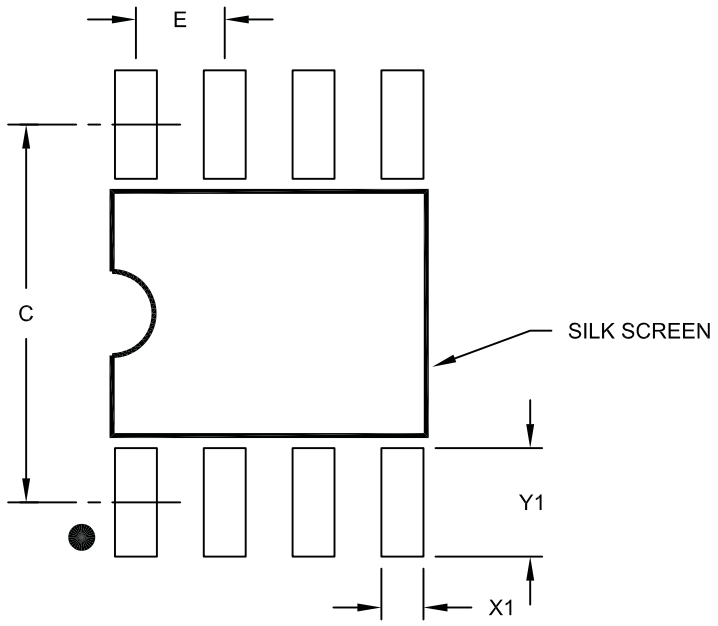

RECOMMENDED LAND PATTERN

Units		MILLIMETERS		
Dimension Limits		MIN	NOM	MAX
Contact Pitch	E		1.27 BSC	
Contact Pad Spacing	C		5.40	
Contact Pad Width (X8)	X1			0.60
Contact Pad Length (X8)	Y1			1.55

Notes:

1. Dimensioning and tolerancing per ASME Y14.5M

BSC: Basic Dimension. Theoretically exact value shown without tolerances.

Microchip Technology Drawing No. C04-2057A

© 2001-2015 Microchip Technology Inc.

NOTES:

© 2001-2015 Microchip Technology Inc.

APPENDIX A: REVISION HISTORY

Revision C (November 2015)

The following is the list of modifications.

1. Updated **Section 1.0 "Electrical Characteristics"**.
2. Added **Temperature Specifications** table.
3. Updated **Product Identification System** section.
4. Minor typographical errors.

Revision B (August 2013)

The following is the list of modifications.

1. Added Appendix A and the **"Product Identification System"** page.
2. Updated **Section 6.0 "Packaging Information"**.

Revision A (May 2001)

- Original release of this document.

© 2001-2015 Microchip Technology Inc.

NOTES:

© 2001-2015 Microchip Technology Inc.

PRODUCT IDENTIFICATION SYSTEM

To order or obtain information, e.g., on pricing or delivery, refer to the factory or the listed sales office.

PART NO.	X	/XX	[X](1)
Device	Temperature Range	Package	Tape and Reel Option

Device:	TC7660S: DC-to-DC Voltage Converter		
Temperature Range:	C	=	0°C to +70°C (Commercial)
	E	=	-40°C to +85°C (Extended)
	V	=	-40°C to +125°C (Various)
Package:	PA	=	8-Lead Plastic Dual In-Line - 300 mil Body (PDIP)
	OA	=	8-Lead Plastic Small Outline - Narrow, 3.90 mm Body (SOIC)
Tape and Reel	Blank	=	Tube
	713	=	Tape and Reel (SOIC only)
	723	=	Reverse Tape and Reel (SOIC only)

Examples:

a) TC7660SCPA: Commercial temperature, PDIP package

a) TC7660SCPA: Commercial temperature, PDIP package

a) TC7660SEPA: Extended temperature, PDIP package

b) TC7660SCOA: Commercial temperature, SOIC package

c) TC7660SCOA713: Tape and Reel, Commercial temperature, SOIC package

d) TC7660SEOA: Extended temperature, SOIC package

e) TC7660SEOA713: Tape and Reel, Extended temperature, SOIC package

f) TC7660SEOA723: Reverse Tape and Reel, Extended temperature, SOIC package

Note 1: Tape and Reel identifier only appears in the catalog part number description. This identifier is used for ordering purposes and is not printed on the device package. Check with your Microchip Sales Office for package availability with the Tape and Reel option.

NOTES:

© 2001-2015 Microchip Technology Inc.

Note the following details of the code protection feature on Microchip devices:

- Microchip products meet the specification contained in their particular Microchip Data Sheet.
- Microchip believes that its family of products is one of the most secure families of its kind on the market today, when used in the intended manner and under normal conditions.
- There are dishonest and possibly illegal methods used to breach the code protection feature. All of these methods, to our knowledge, require using the Microchip products in a manner outside the operating specifications contained in Microchip's Data Sheets. Most likely, the person doing so is engaged in theft of intellectual property.
- Microchip is willing to work with the customer who is concerned about the integrity of their code.
- Neither Microchip nor any other semiconductor manufacturer can guarantee the security of their code. Code protection does not mean that we are guaranteeing the product as "unbreakable."

Code protection is constantly evolving. We at Microchip are committed to continuously improving the code protection features of our products. Attempts to break Microchip's code protection feature may be a violation of the Digital Millennium Copyright Act. If such acts allow unauthorized access to your software or other copyrighted work, you may have a right to sue for relief under that Act.

Information contained in this publication regarding device applications and the like is provided only for your convenience and may be superseded by updates. It is your responsibility to ensure that your application meets with your specifications. MICROCHIP MAKES NO REPRESENTATIONS OR WARRANTIES OF ANY KIND WHETHER EXPRESS OR IMPLIED, WRITTEN OR ORAL, STATUTORY OR OTHERWISE, RELATED TO THE INFORMATION, INCLUDING BUT NOT LIMITED TO ITS CONDITION, QUALITY, PERFORMANCE, MERCHANTABILITY OR FITNESS FOR PURPOSE**.** Microchip disclaims all liability arising from this information and its use. Use of Microchip devices in life support and/or safety applications is entirely at the buyer's risk, and the buyer agrees to defend, indemnify and hold harmless Microchip from any and all damages, claims, suits, or expenses resulting from such use. No licenses are conveyed, implicitly or otherwise, under any Microchip intellectual property rights unless otherwise stated.

Trademarks

The Microchip name and logo, the Microchip logo, dsPIC, FlashFlex, flexPWR, JukeBlox, KEELOQ, KEELOQ logo, Kleer, LANCheck, MediaLB, MOST, MOST logo, MPLAB, OptoLyzer, PIC, PICSTART, PIC^{32} logo, RightTouch, SpyNIC, SST, SST Logo, SuperFlash and UNI/O are registered trademarks of Microchip Technology Incorporated in the U.S.A. and other countries.

The Embedded Control Solutions Company and mTouch are registered trademarks of Microchip Technology Incorporated in the U.S.A.

Analog-for-the-Digital Age, BodyCom, chipKIT, chipKIT logo, CodeGuard, dsPICDEM, dsPICDEM.net, ECAN, In-Circuit Serial Programming, ICSP, Inter-Chip Connectivity, KleerNet, KleerNet logo, MiWi, motorBench, MPASM, MPF, MPLAB Certified logo, MPLIB, MPLINK, MultiTRAK, NetDetach, Omniscient Code Generation, PICDEM, PICDEM.net, PICkit, PICtail, RightTouch logo, REAL ICE, SQI, Serial Quad I/O, Total Endurance, TSHARC, USBCheck, VariSense, ViewSpan, WiperLock, Wireless DNA, and ZENA are trademarks of Microchip Technology Incorporated in the U.S.A. and other countries.

SQTP is a service mark of Microchip Technology Incorporated in the U.S.A.

Silicon Storage Technology is a registered trademark of Microchip Technology Inc. in other countries.

GestIC is a registered trademark of Microchip Technology Germany II GmbH & Co. KG, a subsidiary of Microchip Technology Inc., in other countries.

All other trademarks mentioned herein are property of their respective companies.

© 2001-2015, Microchip Technology Incorporated, Printed in the U.S.A., All Rights Reserved.

ISBN: 978-1-5224-0013-4

QUALITY MANAGEMENT SYSTEM
CERTIFIED BY DNV
== ISO/TS 16949 ==

Microchip received ISO/TS-16949:2009 certification for its worldwide headquarters, design and wafer fabrication facilities in Chandler and Tempe, Arizona; Gresham, Oregon and design centers in California and India. The Company's quality system processes and procedures are for its PIC® MCUs and dsPIC® DSCs, KEELOQ® code hopping devices, Serial EEPROMs, microperipherals, nonvolatile memory and analog products. In addition, Microchip's quality system for the design and manufacture of development systems is ISO 9001:2000 certified.

Worldwide Sales and Service

AMERICAS

Corporate Office
2355 West Chandler Blvd.
Chandler, AZ 85224-6199
Tel: 480-792-7200
Fax: 480-792-7277
Technical Support:
http://www.microchip.com/support
Web Address:
www.microchip.com

Atlanta
Duluth, GA
Tel: 678-957-9614
Fax: 678-957-1455

Austin, TX
Tel: 512-257-3370

Boston
Westborough, MA
Tel: 774-760-0087
Fax: 774-760-0088

Chicago
Itasca, IL
Tel: 630-285-0071
Fax: 630-285-0075

Cleveland
Independence, OH
Tel: 216-447-0464
Fax: 216-447-0643

Dallas
Addison, TX
Tel: 972-818-7423
Fax: 972-818-2924

Detroit
Novi, MI
Tel: 248-848-4000

Houston, TX
Tel: 281-894-5983

Indianapolis
Noblesville, IN
Tel: 317-773-8323
Fax: 317-773-5453

Los Angeles
Mission Viejo, CA
Tel: 949-462-9523
Fax: 949-462-9608

New York, NY
Tel: 631-435-6000

San Jose, CA
Tel: 408-735-9110

Canada - Toronto
Tel: 905-673-0699
Fax: 905-673-6509

ASIA/PACIFIC

Asia Pacific Office
Suites 3707-14, 37th Floor
Tower 6, The Gateway
Harbour City, Kowloon

Hong Kong
Tel: 852-2943-5100
Fax: 852-2401-3431

Australia - Sydney
Tel: 61-2-9868-6733
Fax: 61-2-9868-6755

China - Beijing
Tel: 86-10-8569-7000
Fax: 86-10-8528-2104

China - Chengdu
Tel: 86-28-8665-5511
Fax: 86-28-8665-7889

China - Chongqing
Tel: 86-23-8980-9588
Fax: 86-23-8980-9500

China - Dongguan
Tel: 86-769-8702-9880

China - Hangzhou
Tel: 86-571-8792-8115
Fax: 86-571-8792-8116

China - Hong Kong SAR
Tel: 852-2943-5100
Fax: 852-2401-3431

China - Nanjing
Tel: 86-25-8473-2460
Fax: 86-25-8473-2470

China - Qingdao
Tel: 86-532-8502-7355
Fax: 86-532-8502-7205

China - Shanghai
Tel: 86-21-5407-5533
Fax: 86-21-5407-5066

China - Shenyang
Tel: 86-24-2334-2829
Fax: 86-24-2334-2393

China - Shenzhen
Tel: 86-755-8864-2200
Fax: 86-755-8203-1760

China - Wuhan
Tel: 86-27-5980-5300
Fax: 86-27-5980-5118

China - Xian
Tel: 86-29-8833-7252
Fax: 86-29-8833-7256

ASIA/PACIFIC

China - Xiamen
Tel: 86-592-2388138
Fax: 86-592-2388130

China - Zhuhai
Tel: 86-756-3210040
Fax: 86-756-3210049

India - Bangalore
Tel: 91-80-3090-4444
Fax: 91-80-3090-4123

India - New Delhi
Tel: 91-11-4160-8631
Fax: 91-11-4160-8632

India - Pune
Tel: 91-20-3019-1500

Japan - Osaka
Tel: 81-6-6152-7160
Fax: 81-6-6152-9310

Japan - Tokyo
Tel: 81-3-6880- 3770
Fax: 81-3-6880-3771

Korea - Daegu
Tel: 82-53-744-4301
Fax: 82-53-744-4302

Korea - Seoul
Tel: 82-2-554-7200
Fax: 82-2-558-5932 or
82-2-558-5934

Malaysia - Kuala Lumpur
Tel: 60-3-6201-9857
Fax: 60-3-6201-9859

Malaysia - Penang
Tel: 60-4-227-8870
Fax: 60-4-227-4068

Philippines - Manila
Tel: 63-2-634-9065
Fax: 63-2-634-9069

Singapore
Tel: 65-6334-8870
Fax: 65-6334-8850

Taiwan - Hsin Chu
Tel: 886-3-5778-366
Fax: 886-3-5770-955

Taiwan - Kaohsiung
Tel: 886-7-213-7828

Taiwan - Taipei
Tel: 886-2-2508-8600
Fax: 886-2-2508-0102

Thailand - Bangkok
Tel: 66-2-694-1351
Fax: 66-2-694-1350

EUROPE

Austria - Wels
Tel: 43-7242-2244-39
Fax: 43-7242-2244-393

Denmark - Copenhagen
Tel: 45-4450-2828
Fax: 45-4485-2829

France - Paris
Tel: 33-1-69-53-63-20
Fax: 33-1-69-30-90-79

Germany - Dusseldorf
Tel: 49-2129-3766400

Germany - Karlsruhe
Tel: 49-721-625370

Germany - Munich
Tel: 49-89-627-144-0
Fax: 49-89-627-144-44

Italy - Milan
Tel: 39-0331-742611
Fax: 39-0331-466781

Italy - Venice
Tel: 39-049-7625286

Netherlands - Drunen
Tel: 31-416-690399
Fax: 31-416-690340

Poland - Warsaw
Tel: 48-22-3325737

Spain - Madrid
Tel: 34-91-708-08-90
Fax: 34-91-708-08-91

Sweden - Stockholm
Tel: 46-8-5090-4654

UK - Wokingham
Tel: 44-118-921-5800
Fax: 44-118-921-5820

07/14/15

© 2001-2015 Microchip Technology Inc.