TOSHIBA CMOS DIGITAL INTEGRATED CIRCUIT SILICON MONOLITHIC

TC74LCX02F, TC74LCX02FN, TC74LCX02FT

LOW VOLTAGE QUAD 2-INPUT NOR GATE WITH 5V TOLERANT INPUTS AND OUTPUTS

The TC74LCX02 is a high performance CMOS 2-INPUT NOR GATE. Designed for use in 3.3 Volt systems, it achieves high speed operation while maintaining the CMOS low power dissipation.
The device is designed for low-voltage (3.3V) V_{CC} applications, but it could be used to interface to 5V supply environment for inputs.
All inputs are equipped with protection circuits against static discharge.

(Note) The JEDEC SOP (FN) is not available in Japan.

TC74LCX02F

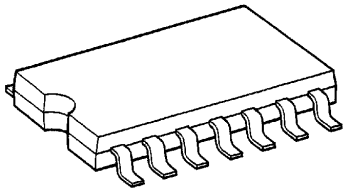

SOP14-P-300-1.27

TC74LCX02FN

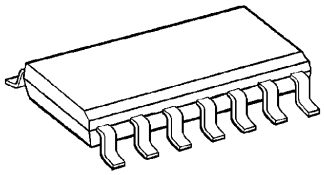

SOL14-P-150-1.27

TC74LCX02FT

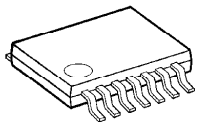

TSSOP14-P-0044-0.65

Weight
SOP14-P-300-1.27 : 0.18g (Typ.)
SOL14-P-150-1.27 : 0.12g (Typ.)
TSSOP14-P-0044-0.65 : 0.06g (Typ.)

FEATURES

- Low voltage operation : $V_{CC} = 2.0 \sim 3.6V$
- High speed operation : $t_{pd} = 5.2ns$ (Max.) ($V_{CC} = 3.0 \sim 3.6V$)
- Output current : $|I_{OH}| / I_{OL} = 24mA$ (Min.) ($V_{CC} = 3.0V$)
- Latch-up performance : $\pm 500mA$
- Available in JEDEC SOP, EIAJ SOP and TSSOP
- Power down protection is provided on all inputs and outputs.
- Pin and function compatible with the 74 series (74AC / VHC / HC / F / ALS / LS etc.) 02 type.

961001EBA2

● TOSHIBA is continually working to improve the quality and the reliability of its products. Nevertheless, semiconductor devices in general can malfunction or fail due to their inherent electrical sensitivity and vulnerability to physical stress. It is the responsibility of the buyer, when utilizing TOSHIBA products, to observe standards of safety, and to avoid situations in which a malfunction or failure of a TOSHIBA product could cause loss of human life, bodily injury or damage to property. In developing your designs, please ensure that TOSHIBA products are used within specified operating ranges as set forth in the most recent products specifications. Also, please keep in mind the precautions and conditions set forth in the TOSHIBA Semiconductor Reliability Handbook.

PIN ASSIGNMENT

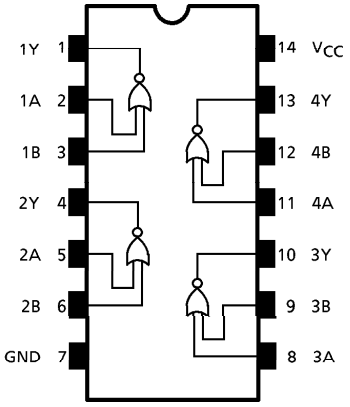

(TOP VIEW)

IEC LOGIC SYMBOL

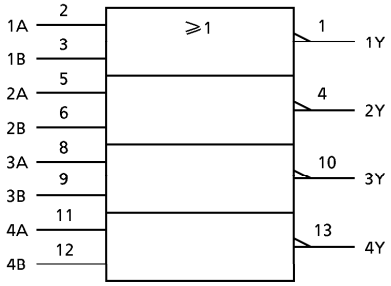

TRUTH TABLE

INPUTS		OUTPUTS
A	B	Y
L	L	H
L	H	L
H	L	L
H	H	L

MAXIMUM RATINGS

PARAMETER	SYMBOL	RATING	UNIT
Power Supply Voltage	V_{CC}	−0.5~7.0	V
DC Input Voltage	V_{IN}	−0.5~7.0	V
DC Output Voltage	V_{OUT}	−0.5~7.0 (Note 1)	V
		−0.5~V_{CC}+0.5 (Note 2)	
Input Diode Current	I_{IK}	−50	mA
Output Diode Current	I_{OK}	±50 (Note 3)	mA
DC Output Current	I_{OUT}	±50	mA
Power Dissipation	P_D	180	mW
DC V_{CC} / Ground Current	I_{CC} / I_{GND}	±100	mA
Storage Temperature	T_{stg}	−65~150	°C

(Note 1) VCC = 0V

(Note 2) High or Low State. I_{OUT} absolute maximum rating must be observed.

(Note 3) V_{OUT}<GND, V_{OUT}>V_{CC}

961001EBA2'

- The products described in this document are subject to foreign exchange and foreign trade control laws.
- The information contained herein is presented only as a guide for the applications of our products. No responsibility is assumed by TOSHIBA CORPORATION for any infringements of intellectual property or other rights of the third parties which may result from its use. No license is granted by implication or otherwise under any intellectual property or other rights of TOSHIBA CORPORATION or others.
- The information contained herein is subject to change without notice.

RECOMMENDED OPERATING CONDITIONS

PARAMETER	SYMBOL	RATING	UNIT
Supply Voltage	V_{CC}	2.0~3.6	V
		1.5~3.6 (Note 4)	
Input Voltage	V_{IN}	0~5.5	V
Output Voltage	V_{OUT}	0~5.5 (Note 5)	V
		0~V_{CC} (Note 6)	
Output Current	I_{OH} / I_{OL}	±24 (Note 7)	mA
		±12 (Note 8)	
Operating Temperature	T_{opr}	−40~85	°C
Input Rise And Fall Time	dt / dv	0~10 (Note 9)	ns / V

(Note 4) Data Retention Only
(Note 5) VCC = 0V
(Note 6) High or Low State
(Note 7) V_{CC} = 3.0~3.6V
(Note 8) V_{CC} = 2.7~3.0V
(Note 9) V_{IN} = 0.8~2.0V, V_{CC} = 3.0V

ELECTRICAL CHARACTERISTICS
DC characteristics (Ta = −40~85°C)

PARAMETER		SYMBOL	TEST CONDITION		V_{CC} (V)	MIN.	MAX.	UNIT
Input Voltage	"H" Level	V_{IH}			2.7~3.6	2.0	—	V
	"L" Level	V_{IL}			2.7~3.6	—	0.8	
Output Voltage	"H" Level	V_{OH}	V_{IN} = V_{IL}	I_{OH} = −100μA	2.7~3.6	V_{CC} −0.2	—	V
				I_{OH} = −12mA	2.7	2.2	—	
				I_{OH} = −18mA	3.0	2.4	—	
				I_{OH} = −24mA	3.0	2.2	—	
	"L" Level	V_{OL}	V_{IN} = V_{IH} or V_{IL}	I_{OL} = 100μA	2.7~3.6	—	0.2	
				I_{OL} = 12mA	2.7	—	0.4	
				I_{OL} = 16mA	3.0	—	0.4	
				I_{OL} = 24mA	3.0	—	0.55	
Input Leakage Current		I_{IN}	V_{IN} = 0~5.5V		2.7~3.6	—	±5.0	μA
Power Off Leakage Cuurent		I_{OFF}	V_{IN} / V_{OUT} = 5.5V		0	—	10.0	μA
Quiescent Supply Current		I_{CC}	V_{IN} = V_{CC} or GND		2.7~3.6	—	10.0	μA
			V_{IN} / V_{OUT} = 3.6~5.5V		2.7~3.6	—	±10.0	
Increase In I_{CC} Per Input		ΔI_{CC}	V_{IH} = V_{CC} − 0.6V		2.7~3.6	—	500	μA

AC characteristics (Ta = −40~85°C)

PARAMETER	SYMBOL	TEST CONDITION	V_{CC} (V)	MIN.	MAX.	UNIT
Propagation Delay Time	t_{pLH} t_{pHL}	(Fig.1, 2)	2.7	—	6.0	ns
			3.3 ± 0.3	1.5	5.2	
Output To Output Skew	t_{osLH} t_{osHL}	(Note 10)	2.7	—	—	ns
			3.3 ± 0.3	—	1.0	

(Note 10) Parameter guaranteed by design.
($t_{osLH} = |t_{pLHm} - t_{pLHn}|$, $t_{osHL} = |t_{pHLm} - t_{pHLn}|$)

DYNAMIC SWITCHING CHARACTERISTICS (Ta = 25°C, Input $t_r = t_f = 2.5$ns, $C_L = 50$pF, $R_L = 500\Omega$)

PARAMETER	SYMBOL	TEST CONDITION	V_{CC} (V)	TYP	UNIT
Quiet Output Maximum Dynamic V_{OL}	V_{OLP}	$V_{IH} = 3.3$V, $V_{IL} = 0$V	3.3	0.8	V
Quiet Output Minimum Dynamic V_{OL}	$\|V_{OLV}\|$	$V_{IH} = 3.3$V, $V_{IL} = 0$V	3.3	0.8	V

CAPACITIVE CHARACTERISTICS (Ta = 25°C)

PARAMETER	SYMBOL	TEST CONDITION	V_{CC} (V)	TYP	UNIT
Input Capacitance	C_{IN}	—	3.3	7	pF
Output Capacitance	C_{OUT}		0	8	pF
Power Dissipation Capacitance	C_{PD}	$f_{IN} = 10$MHz (Note 11)	3.3	25	pF

(Note 11) C_{PD} is defined as the value of the internal equivalent capacitance which is calculated from the operating current consumption without load.
Average operating current can be obtained by the equation :
$I_{CC\,(opr.)} = C_{PD} \cdot V_{CC} \cdot f_{IN} + I_{CC} / 4$ (Per gate)

TEST CIRCUIT

Fig.1

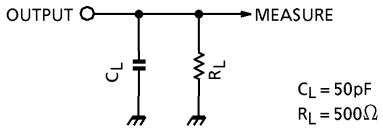

AC WAVEFORM

Fig.2 t_{pLH}, t_{pHL}

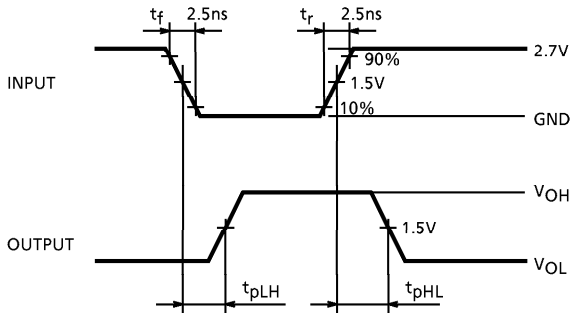

OUTLINE DRAWING

SOP14-P-300-1.27

Unit : mm

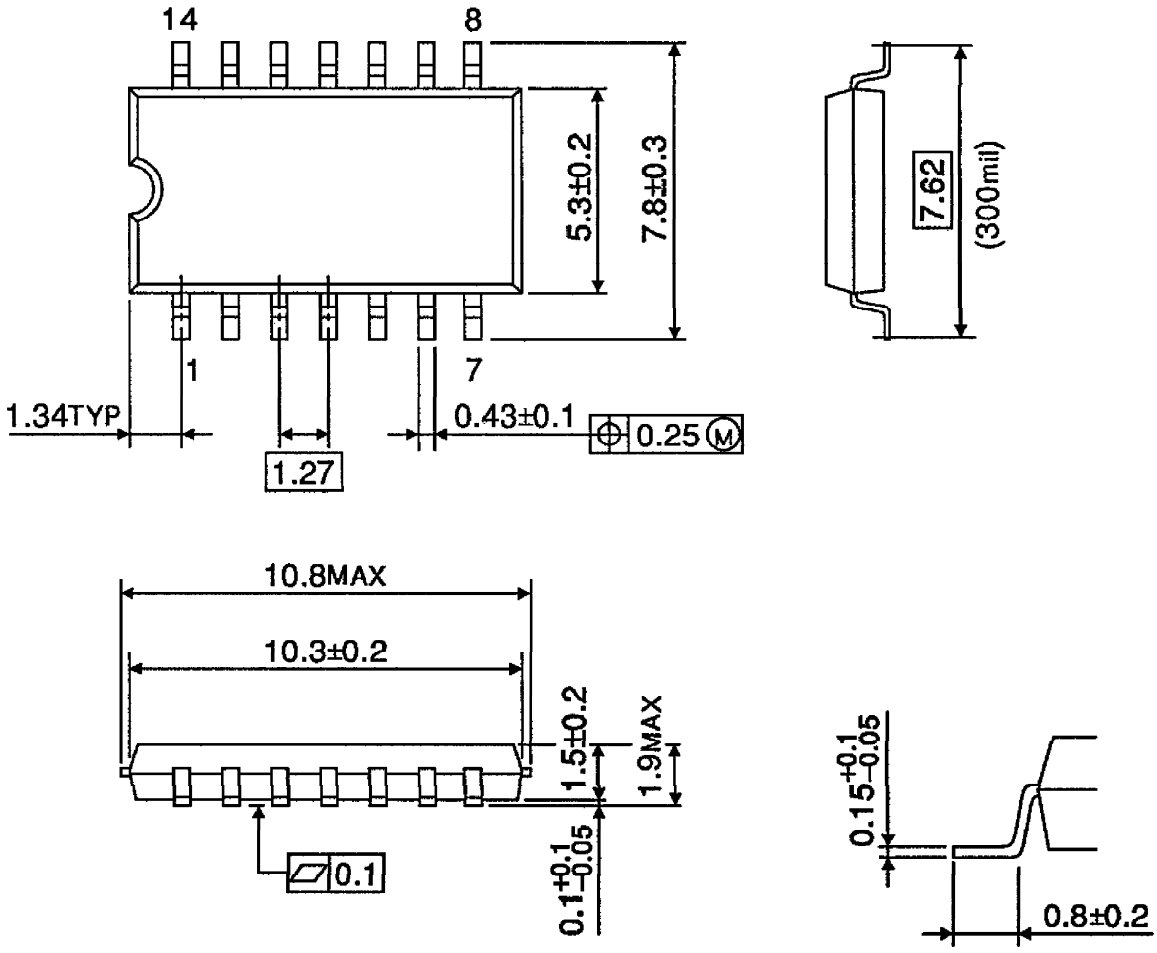

Weight : 0.18g (Typ.)

OUTLINE DRAWING

SOL14-P-150-1.27

Unit : mm

(Note) This package is not available in Japan.

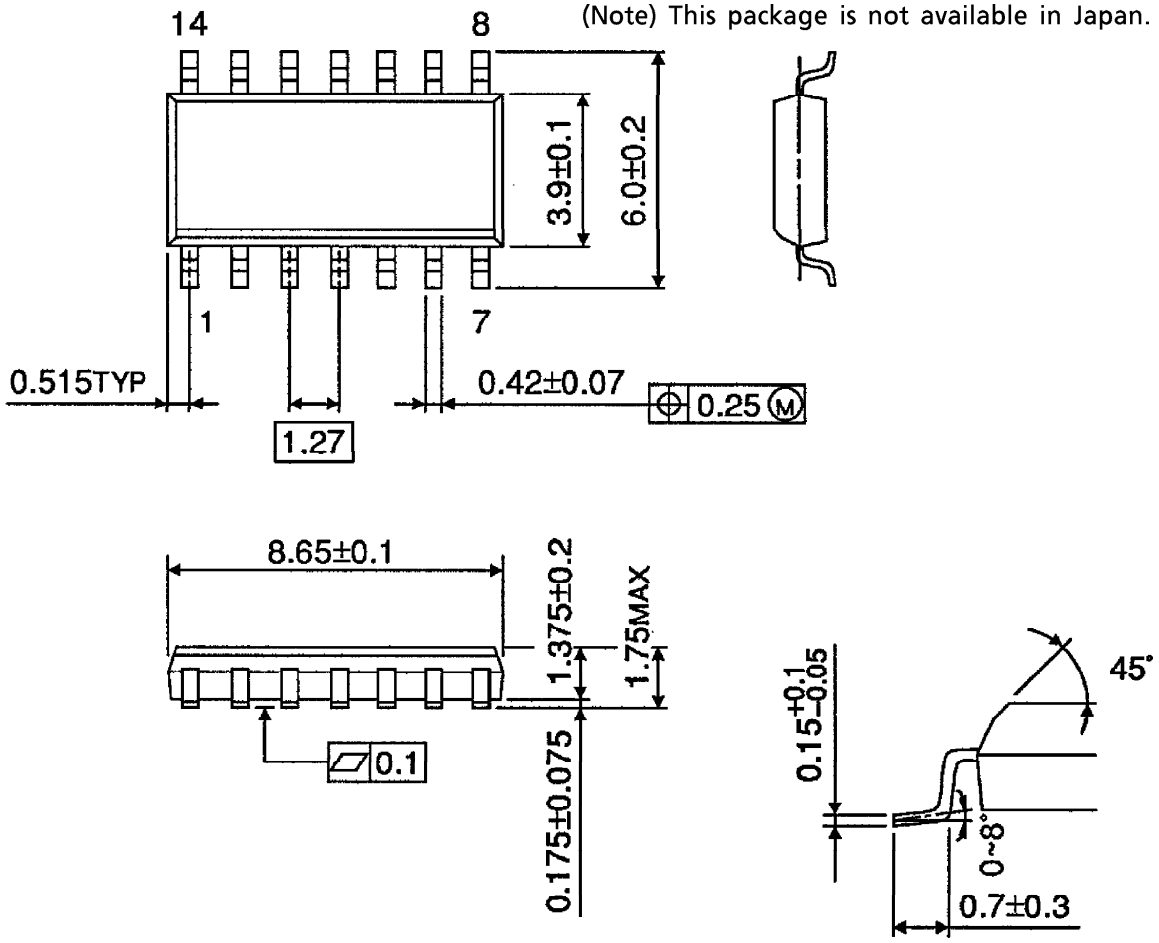

Weight : 0.12g (Typ.)

OUTLINE DRAWING

TSSOP14-P-0044-0.65

Unit : mm

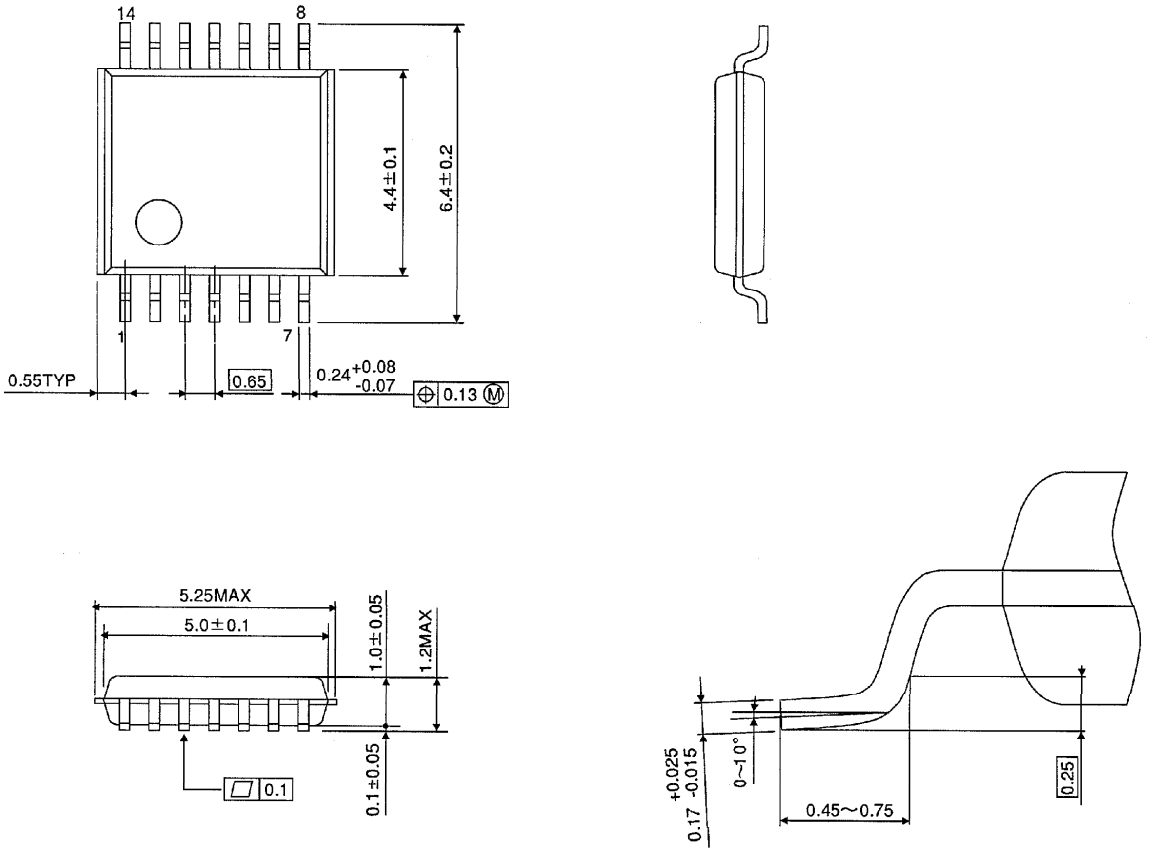

Weight : 0.06g (Typ.)