TOSHIBA CMOS Digital Integrated Circuit Silicon Monolithic

TC74HC03AP,TC74HC03AF,TC74HC03AFN

Quad 2-Input NAND Gate (open drain)

Note: xxxFN (JEDEC SOP) is not available in Japan.

The TC74HC03A is a high speed CMOS 2-INPUT NAND GATE fabricated with silicon gate C^2MOS technology.

It achieves the high speed operation similar to equivalent LSTTL while maintaining the CMOS low power dissipation.

Pin configuration and function are the same as the TC74HC00A. But the TC74HC03A has, as its outputs, high performance MOS N-channel transistors. (open-drain outputs) This device can, thefore, with a suitable pull-up resistors, be used in wired-AND, LED driver and other application.

All inputs are equipped with protection circuits against static discharge or transient excess voltage.

TC74HC03AP

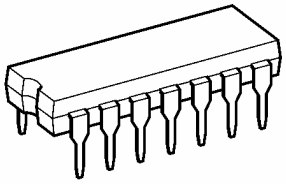

DIP14-P-300-2.54

TC74HC03AF

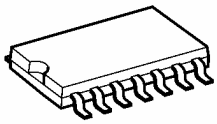

SOP14-P-300-1.27A

TC74HC03AFN

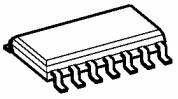

SOL14-P-150-1.27

Weight

DIP14-P-300-2.54	: 0.96 g (typ.)
SOP14-P-300-1.27A	: 0.18 g (typ.)
SOL14-P-150-1.27	: 0.12 g (typ.)

Features

- High speed: t_{pz} = 5 ns (typ.) at V_{CC} = 5 V
- Low power dissipation: I_{CC} = 1 μA (max) at Ta = 25°C
- High noise immunity: $V_{NIH} = V_{NIL}$ = 28% V_{CC} (min)
- Output drive capability: 10 LSTTL loads
- Wide operating voltage range: V_{CC} (opr) = 2~6 V
- Open drain structure
- Pin and function compatible with 74LS03

Pin Assignment

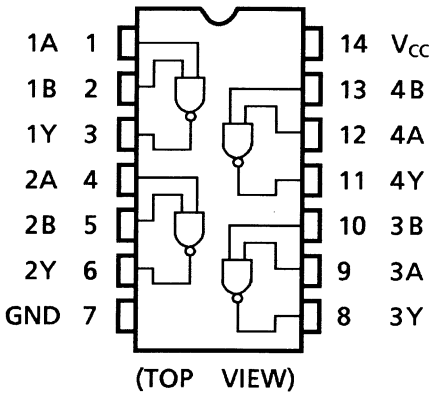

IEC Logic Symbol

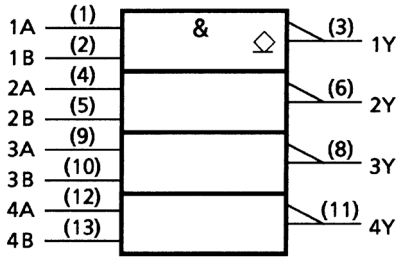

Truth Table

A	B	Y
L	L	Z
L	H	Z
H	L	Z
H	H	L

Z: High impedance

System Diagram (per gate)

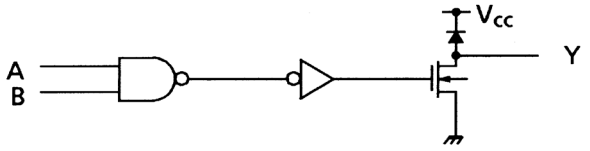

Absolute Maximum Ratings (Note 1)

Characteristics	Symbol	Rating	Unit
Supply voltage range	V_{CC}	−0.5~7	V
DC input voltage	V_{IN}	−0.5~V_{CC} + 0.5	V
DC output voltage	V_{OUT}	−0.5~V_{CC} + 0.5	V
Input diode current	I_{IK}	±20	mA
Output diode current	I_{OK}	±20	mA
DC output current	I_{OUT}	+25	mA
DC V_{CC}/ground current	I_{CC}	±50	mA
Power dissipation	P_D	500 (DIP) (Note 2)/180 (SOP)	mW
Storage temperature	T_{stg}	−65~150	°C

Note 1: Exceeding any of the absolute maximum ratings, even briefly, lead to deterioration in IC performance or even destruction.
Using continuously under heavy loads (e.g. the application of high temperature/current/voltage and the significant change in temperature, etc.) may cause this product to decrease in the reliability significantly even if the operating conditions (i.e. operating temperature/current/voltage, etc.) are within the absolute maximum ratings and the operating ranges.
Please design the appropriate reliability upon reviewing the Toshiba Semiconductor Reliability Handbook (“Handling Precautions”/“Derating Concept and Methods”) and individual reliability data (i.e. reliability test report and estimated failure rate, etc).

Note 2: 500 mW in the range of Ta = −40°C~65°C. From Ta = 65°C to 85°C a derating factor of −10 mW/°C shall be applied until 300 mW.

Operating Ranges (Note)

Characteristics	Symbol	Rating	Unit
Supply voltage	V_{CC}	2~6	V
Input voltage	V_{IN}	0~V_{CC}	V
Output voltage	V_{OUT}	0~V_{CC}	V
Operating temperature	T_{opr}	−40~85	°C
Input rise and fall time	t_r, t_f	0~1000 (V_{CC} = 2.0 V) 0~500 (V_{CC} = 4.5 V) 0~400 (V_{CC} = 6.0 V)	ns

Note: The operating ranges must be maintained to ensure the normal operation of the device.
Unused inputs must be tied to either VCC or GND.

Electrical Characteristics

DC Characteristics

Characteristics	Symbol	Test Condition		V_{CC} (V)	Ta = 25°C Min	Ta = 25°C Typ.	Ta = 25°C Max	Ta = –40~85°C Min	Ta = –40~85°C Max	Unit
High-level input voltage	V_{IH}	—		2.0	1.50	—	—	1.50	—	V
				4.5	3.15	—	—	3.15	—	
				6.0	4.20	—	—	4.20	—	
Low-level input voltage	V_{IL}	—		2.0	—	—	0.50	—	0.50	V
				4.5	—	—	1.35	—	1.35	
				6.0	—	—	1.80	—	1.80	
Low-level output voltage	V_{OL}	V_{IN} = V_{IH} or V_{IL}	I_{OL} = 20 μA	2.0	—	0.0	0.1	—	0.1	V
				4.5	—	0.0	0.1	—	0.1	
				6.0	—	0.0	0.1	—	0.1	
			I_{OL} = 4 mA	4.5	—	0.17	0.26	—	0.33	
			I_{OL} = 5.2 mA	6.0	—	0.18	0.26	—	0.33	
Output off-state current	I_{OZ}	V_{IN} = V_{IH} or V_{IL} V_{OUT} = V_{CC}		6.0	—	—	±0.5	—	±5.0	μA
Input leakage current	I_{IN}	V_{IN} = V_{CC} or GND		6.0	—	—	±0.1	—	±1.0	μA
Quiescent supply current	I_{CC}	V_{IN} = V_{CC} or GND		6.0	—	—	1.0	—	10.0	μA

AC Characteristics (C_L = 15 pF, V_{CC} = 5 V, Ta = 25°C, input: t_r = t_f = 6 ns)

Characteristics	Symbol	Test Condition	Min	Typ.	Max	Unit
Output transition time	t_{THL}	—	—	4	8	ns
Propagation delay time	t_{pLZ}	R_L = 1 kΩ	—	5	12	ns
Propagation delay time	t_{pZL}	R_L = 1 kΩ	—	5	12	ns

AC Characteristics (C_L = 50 pF, input: $t_r = t_f$ = 6 ns)

Characteristics	Symbol	Test Condition		Ta = 25°C			Ta = −40~85°C		Unit
			V_{CC} (V)	Min	Typ.	Max	Min	Max	
Output transition time	t_{THL}	—	2.0	—	30	75	—	95	ns
			4.5	—	8	15	—	19	
			6.0	—	7	13	—	16	
Propagation delay time	t_{pLZ}	R_L = 1 kΩ	2.0	—	20	75	—	95	ns
			4.5	—	10	15	—	19	
			6.0	—	9	13	—	16	
Propagation delay time	t_{pZL}	R_L = 1 kΩ	2.0	—	24	75	—	95	ns
			4.5	—	8	15	—	19	
			6.0	—	7	13	—	16	
Input capacitance	C_{IN}	—		—	5	10	—	10	pF
Output capacitance	C_{OUT}	—		—	3	—	—	—	pF
Power dissipation capacitance	C_{PD} (Note)	—		—	5	—	—	—	pF

Note: C_{PD} is defined as the value of the internal equivalent capacitance which is calculated from the operating current consumption without load.

Average operating current can be obtained by the equation:

$$I_{CC}\ (opr) = C_{PD} \cdot V_{CC} \cdot f_{IN} + I_{CC}/4\ (per\ gate)$$

Package Dimensions

DIP14-P-300-2.54 Unit : mm

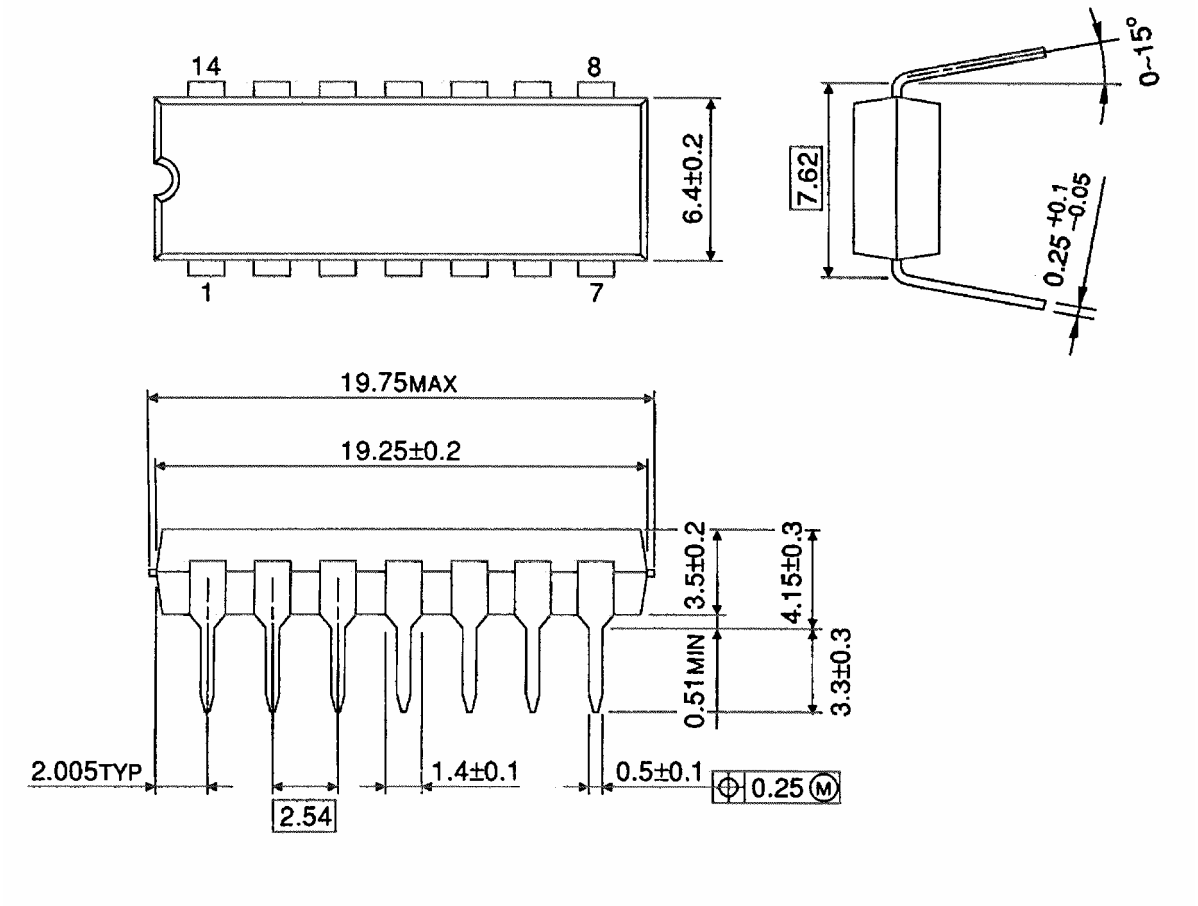

Weight: 0.96 g (typ.)

Package Dimensions

SOP14-P-300-1.27A Unit: mm

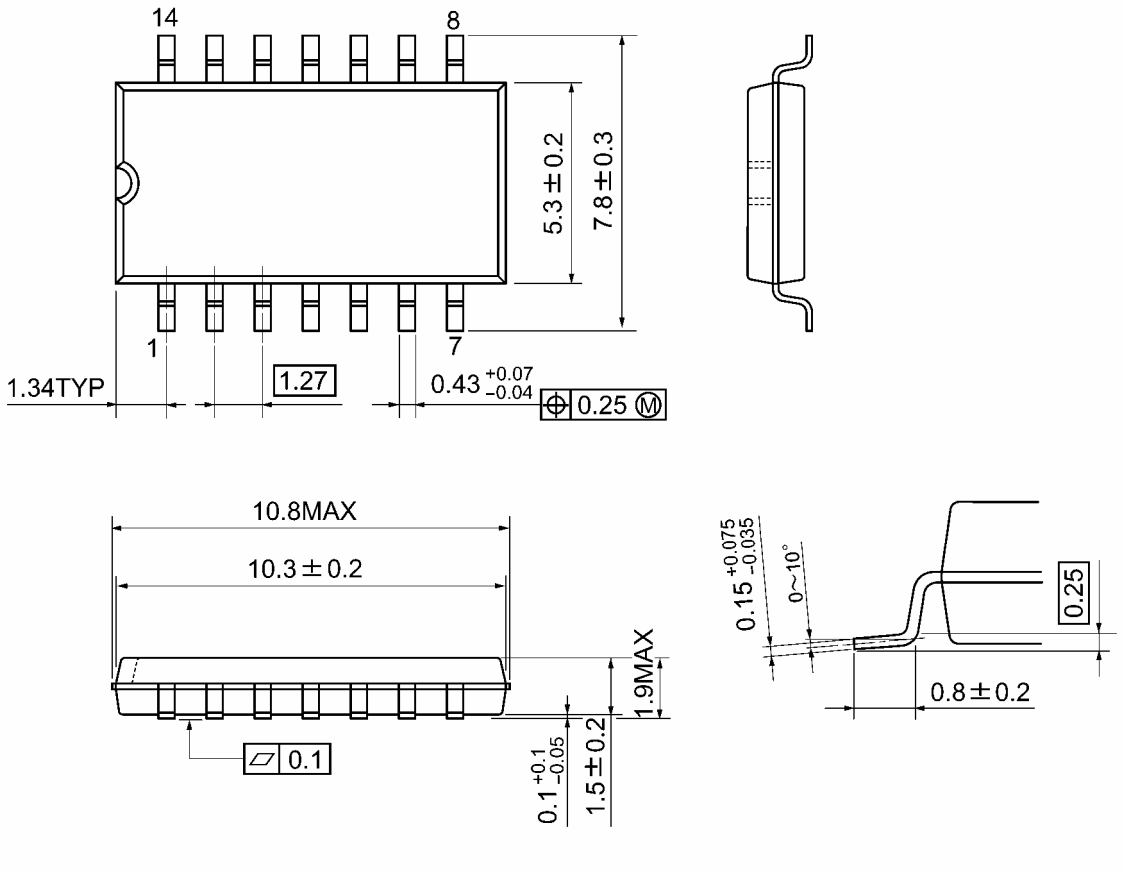

Weight: 0.18 g (typ.)

Package Dimensions (Note)

SOL14-P-150-1.27 Unit : mm

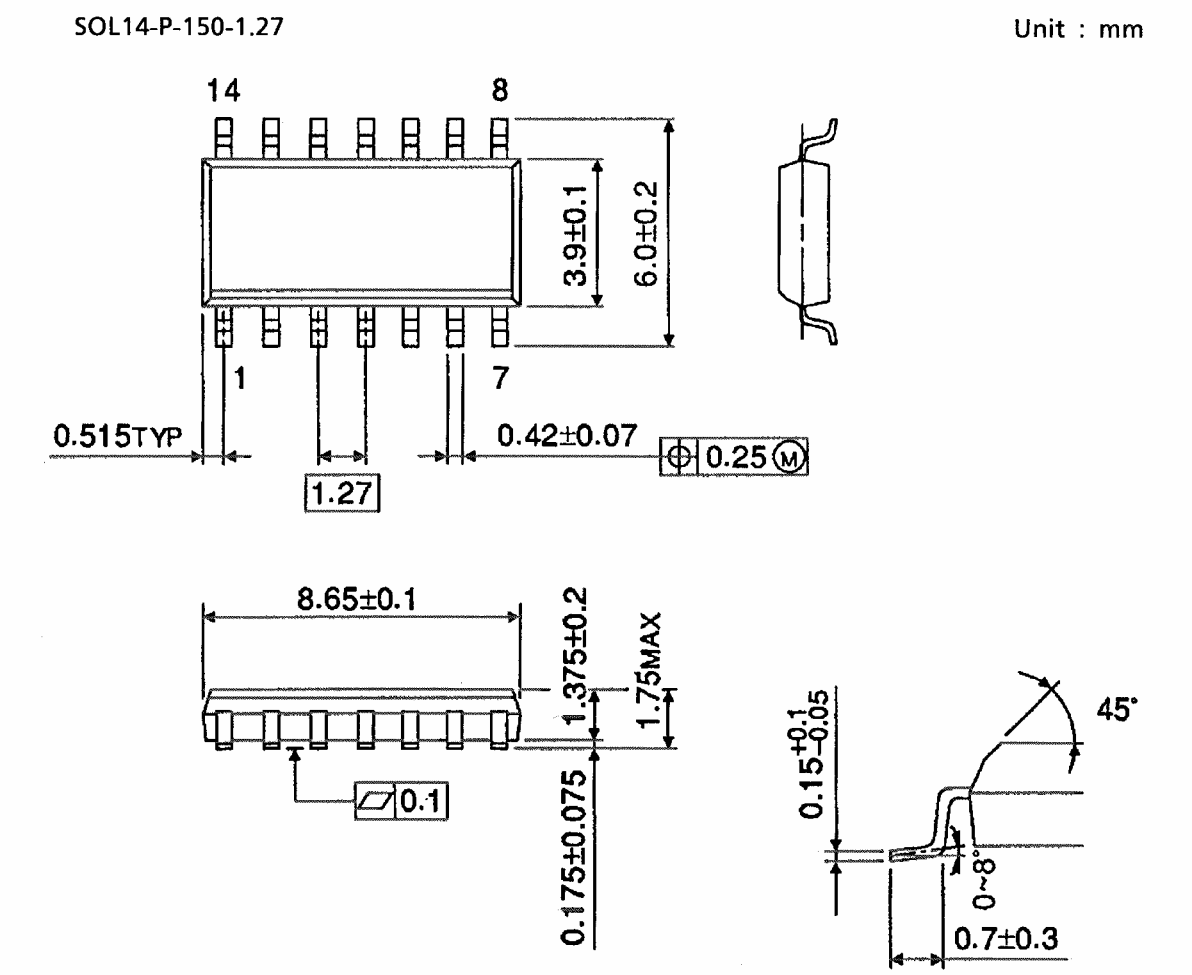

Note: This package is not available in Japan.

Weight: 0.12 g (typ.)

RESTRICTIONS ON PRODUCT USE

20070701-EN GENERAL

- The information contained herein is subject to change without notice.
- TOSHIBA is continually working to improve the quality and reliability of its products. Nevertheless, semiconductor devices in general can malfunction or fail due to their inherent electrical sensitivity and vulnerability to physical stress. It is the responsibility of the buyer, when utilizing TOSHIBA products, to comply with the standards of safety in making a safe design for the entire system, and to avoid situations in which a malfunction or failure of such TOSHIBA products could cause loss of human life, bodily injury or damage to property.
  In developing your designs, please ensure that TOSHIBA products are used within specified operating ranges as set forth in the most recent TOSHIBA products specifications. Also, please keep in mind the precautions and conditions set forth in the “Handling Guide for Semiconductor Devices,” or “TOSHIBA Semiconductor Reliability Handbook” etc.
- The TOSHIBA products listed in this document are intended for usage in general electronics applications (computer, personal equipment, office equipment, measuring equipment, industrial robotics, domestic appliances, etc.).These TOSHIBA products are neither intended nor warranted for usage in equipment that requires extraordinarily high quality and/or reliability or a malfunction or failure of which may cause loss of human life or bodily injury (“Unintended Usage”). Unintended Usage include atomic energy control instruments, airplane or spaceship instruments, transportation instruments, traffic signal instruments, combustion control instruments, medical instruments, all types of safety devices, etc.. Unintended Usage of TOSHIBA products listed in his document shall be made at the customer’s own risk.
- The products described in this document shall not be used or embedded to any downstream products of which manufacture, use and/or sale are prohibited under any applicable laws and regulations.
- The information contained herein is presented only as a guide for the applications of our products. No responsibility is assumed by TOSHIBA for any infringements of patents or other rights of the third parties which may result from its use. No license is granted by implication or otherwise under any patents or other rights of TOSHIBA or the third parties.
- Please contact your sales representative for product-by-product details in this document regarding RoHS compatibility. Please use these products in this document in compliance with all applicable laws and regulations that regulate the inclusion or use of controlled substances. Toshiba assumes no liability for damage or losses occurring as a result of noncompliance with applicable laws and regulations.