TOSHIBA MOS DIGITAL INTEGRATED CIRCUIT SILICON GATE CMOS

32,768-WORD BY 8-BIT STATIC RAM

DESCRIPTION

The TC55257DPL/DFL/DFTL/DTRL is a 262,144-bit static random access memory (SRAM) organized as 32,768 words by 8 bits. Fabricated using Toshiba's CMOS Silicon gate process technology, this device operates from a single 2.7 to 5.5 V power supply. Advanced circuit technology provides both high speed and low power at an operating current of 5 mA/MHz (typ) and a minimum cycle time of 55 ns. It is automatically placed in low-power mode at 0.3 μA standby current (typ) when chip enable ($\overline{CE}$) is asserted high. There are two control inputs. $\overline{CE}$ is used to select the device and for data retention control, and output enable ($\overline{OE}$) provides fast memory access. This device is well suited to various microprocessor system applications where high speed, low power and battery backup are required. The TC55257DPL/DFL/DFTL/DTRL is available in a standard plastic 28-pin dual-in-line package (DIP), plastic 28-pin small-outline package (SOP) and normal and reverse pinout plastic 28-pin thin-small-outline package (TSOP).

FEATURES

- Low-power dissipation
  Operating: 27.5 mW/MHz (typical)
- Standby current of 2 μA (maximum) at Ta = 25°C
- Single power supply voltage of 2.7 to 5.5 V
- Power down features using $\overline{CE}$.
- Data retention supply voltage of 2 to 5.5 V
- Direct TTL compatibility for all inputs and outputs
- Access Times (maximum):

	5 V ± 10%			2.7 to 5.5 V	
	-55V	-70V	-85V	-55V/-70V	-85V
Access Time	55 ns	70 ns	85 ns	120 ns	150 ns
$\overline{CE}$ Access Time	55 ns	70 ns	85 ns	120 ns	150 ns
$\overline{OE}$ Access Time	30 ns	35 ns	45 ns	70 ns	75 ns

- Packages:
  DIP28-P-600-2.54 (DPL) (Weight: 4.42 g typ)
  SOP28-P-450-1.27 (DFL) (Weight: 0.79 g typ)
  TSOP I 28-P-0.55 (DFTL) (Weight: 0.22 g typ)
  TSOP I 28-P-0.55A (DTRL) (Weight: 0.22 g typ)

PIN ASSIGNMENT (TOP VIEW)

○ 28 PIN DIP & SOP

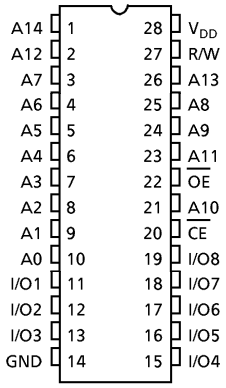

○ 28 PIN TSOP (Normal pinout)

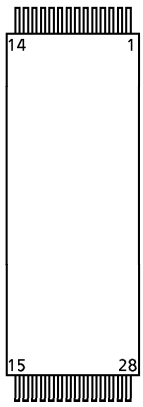

(Reverse pinout)

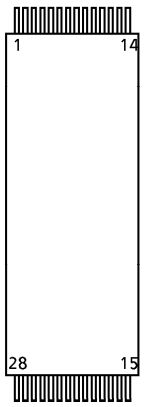

PIN NAMES

A0 to A14	Address Inputs
R/W	Read/Write Control
$\overline{OE}$	Output Enable
$\overline{CE}$	Chip Enable
I/O1 to I/O8	Data Input/Output
V_{DD}	Power
GND	Ground

PIN NO.	1	2	3	4	5	6	7	8	9	10	11	12	13	14
PIN NAME	$\overline{OE}$	A_{11}	A_9	A_8	A_{13}	R/W	V_{DD}	A_{14}	A_{12}	A_7	A_6	A_5	A_4	A_3
PIN NO.	15	16	17	18	19	20	21	22	23	24	25	26	27	28
PIN NAME	A_2	A_1	A_0	I/O1	I/O2	I/O3	GND	I/O4	I/O5	I/O6	I/O7	I/O8	$\overline{CE}$	A_{10}

961001EBA1

- TOSHIBA is continually working to improve the quality and the reliability of its products. Nevertheless, semiconductor devices in general can malfunction or fail due to their inherent electrical sensitivity and vulnerability to physical stress. It is the responsibility of the buyer, when utilizing TOSHIBA products, to observe standards of safety, and to avoid situations in which a malfunction or failure of a TOSHIBA product could cause loss of human life, bodily injury or damage to property. In developing your designs, please ensure that TOSHIBA products are used within specified operating ranges as set forth in the most recent products specifications. Also, please keep in mind the precautions and conditions set forth in the TOSHIBA Semiconductor Reliability Handbook.
- The products described in this document are subject to foreign exchange and foreign trade control laws.
- The information contained herein is presented only as a guide for the applications of our products. No responsibility is assumed by TOSHIBA CORPORATION for any infringements of intellectual property or other rights of the third parties which may result from its use. No license is granted by implication or otherwise under any intellectual property or other rights of TOSHIBA CORPORATION or others.
- The information contained herein is subject to change without notice.

BLOCK DIAGRAM

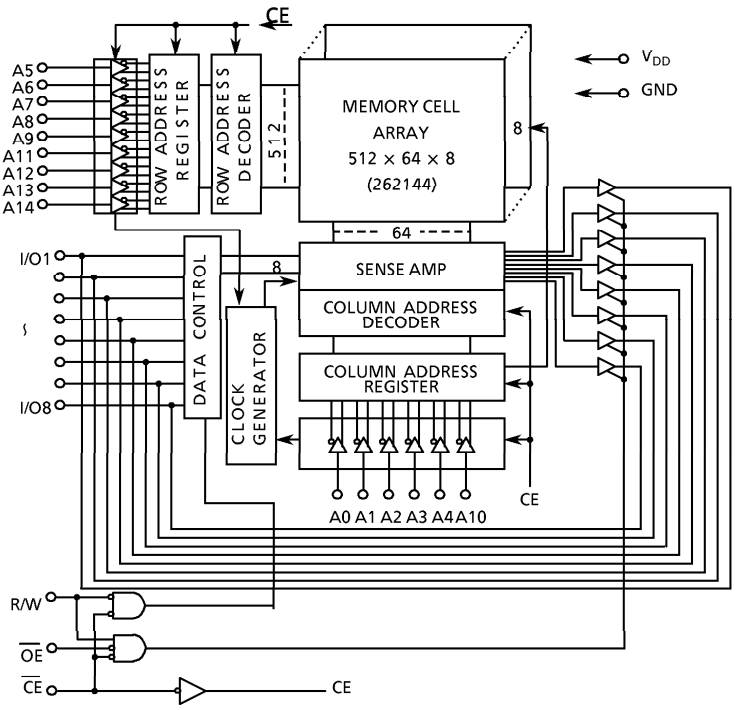

OPERATION MODE

MODE	$\overline{CE}$	$\overline{OE}$	R/W	I/O1 to I/O8	POWER
Read	L	L	H	D_{OUT}	I_{DDO}
Write	L	×	L	D_{IN}	I_{DDO}
Outputs Disabled	L	H	H	High-Z	I_{DDO}
Standby	H	×	×	High-Z	I_{DDS}

Note: × = don't care. H = logic high. L = logic low.

ABSOLUTE MAXIMUM RATINGS

SYMBOL	RATING	VALUE	UNIT
V_{DD}	Power Supply Voltage	− 0.3 to 7.0	V
V_{IN}	Input Voltage	− 0.3* to 7.0	V
$V_{I/O}$	Input/Output Voltage	− 0.5* to V_{DD} + 0.5	V
P_D	Power Dissipation	1.0/0.6 **	W
Tsolder	Soldering Temperature (10 s)	260	°C
Tstrg	Storage Temperature	− 55 to 150	°C
Topr	Operating Temperature	0 to 70	°C

* − 3.0 V when measured at a pulse width of 50 ns

** SOP

DC RECOMMENDED OPERATING CONDITIONS (Ta = 0° to 70°C)

SYMBOL	PARAMETER	5 V ± 10%			2.7 to 5.5 V			UNIT
		MIN	TYP	MAX	MIN	TYP	MAX	
V_{DD}	Power Supply Voltage	4.5	–	5.5	2.7	–	5.5	V
V_{IH}	Input High Voltage	2.2	–	V_{DD} + 0.3	V_{DD} – 0.2	–	V_{DD} + 0.3	
V_{IL}	Input Low Voltage	– 0.3*	–	0.8	– 0.3*	–	0.2	
V_{DH}	Data Retention Supply Voltage	2.0	–	5.5	2.0	–	5.5	

* – 3.0 V when measured at a pulse width of 50 ns

DC CHARACTERISTICS (Ta = 0° to 70°C, V_{DD} = 3 V ± 10%)

SYMBOL	PARAMETER	TEST CONDITION		MIN	TYP	MAX	UNIT
I_{IL}	Input Leakage Current	V_{IN} = 0 V to V_{DD}		–	–	± 1.0	μA
I_{OH}	Output High Current	V_{OH} = 2.4 V		– 1.0	–	–	mA
I_{OL}	Output Low Current	V_{OL} = 0.4 V		4.0	–	–	mA
I_{LO}	Output Leakage Current	$\overline{CE}$ = V_{IH} or R/W = V_{IL} or $\overline{OE}$ = V_{IH} V_{OUT} = 0 V to V_{DD}		–	–	± 1.0	μA
I_{DDO1}	Operating Current	$\overline{CE}$ = V_{IL} R/W = V_{IH} Other Inputs = V_{IH}/V_{IL} I_{OUT} = 0 mA	t_{cycle} = 1 μs	–	10	–	mA
			t_{cycle} = min	–	–	70	
I_{DDO2}		$\overline{CE}$ = 0.2 V R/W = V_{DD} – 0.2 V Other Inputs = V_{DD} – 0.2 V/0.2 V I_{OUT} = 0 mA	t_{cycle} = 1 μs	–	5	–	mA
			t_{cycle} = min	–	–	60	
I_{DDS1}	Standby Current	$\overline{CE}$ = V_{IH}		–	–	3	mA
I_{DDS2}	Standby Current	$\overline{CE}$ = V_{DD} – 0.2 V	Ta = 0° to 70°C	–	–	20	μA
		V_{DD} = 2.0 to 5.5 V	Ta = 25°C	–	0.3	2	μA

DC CHARACTERISTICS (Ta = 0° to 70°C, V_{DD} = 5 V ± 10%)

SYMBOL	PARAMETER	TEST CONDITION				MIN	TYP	MAX	UNIT
I_{IL}	Input Leakage Current	V_{IN} = 0 V to V_{DD}				–	–	± 1.0	μA
I_{OH}	Output High Current	V_{OH} = V_{DD} – 0.2 V				– 0.1	–	–	mA
I_{OL}	Output Low Current	V_{OL} = 0.2 V				0.1	–	–	mA
I_{LO}	Output Leakage Current	$\overline{CE}$ = V_{IH} or R/W = V_{IL} or $\overline{OE}$ = V_{IH}, V_{OUT} = 0 V to V_{DD}				–	–	± 1.0	μA
I_{DDO2}	Operating Current	$\overline{CE}$ = 0.2 V R/W = V_{DD} – 0.2 V, I_{OUT} = 0 mA Other Inputs = V_{DD} – 0.2 V/0.2 V	Tcycle	min		–	–	20	mA
				1 μs		–	–	5	
I_{DDS2}	Standby Current	$\overline{CE}$ = V_{DD} – 0.2 V	V_{DD} = 3 V ± 10%	Ta = 25°C		–	1	1.5	μA
				Ta = 0° to 70°C		–	–	15	
			V_{DD} = 3.0 V	Ta = 25°C		–	–	1	
				Ta = 0° to 40°C		–	–	2	
				Ta = 0° to 70°C		–	–	10	

CAPACITANCE (Ta = 25°C, f = 1 MHz)

SYMBOL	PARAMETER	TEST CONDITION	MAX	UNIT
C_{IN}	Input Capacitance	V_{IN} = GND	10	pF
C_{OUT}	Output Capacitance	V_{OUT} = GND	10	

Note: This parameter is periodically sampled and is not 100% tested.

AC CHARACTERISTICS AND OPERATING CONDITIONS (Ta = 0° to 70°C, V_{DD} = 5 V ± 10%)

READ CYCLE

SYMBOL	PARAMETER	TC55257DPL/DFL/DFTL/DTRL						UNIT
		-55V		-70V		-85V		
		MIN	MAX	MIN	MAX	MIN	MAX	
t_{RC}	Read Cycle Time	55	–	70	–	85	–	ns
t_{ACC}	Address Access Time	–	55	–	70	–	85	
t_{CO}	Chip Enable Access Time	–	55	–	70	–	85	
t_{OE}	Output Enable Access Time	–	30	–	35	–	45	
t_{COE}	Chip Enable Low to Output Active	10	–	10	–	10	–	
t_{OEE}	Output Enable Low to Output Active	5	–	5	–	5	–	
t_{OD}	Chip Enable High to Output High-Z	–	20	–	25	–	30	
t_{ODO}	Output Enable High to Output High-Z	–	20	–	25	–	30	
t_{OH}	Output Data Hold Time	10	–	10	–	10	–	

WRITE CYCLE

SYMBOL	PARAMETER	TC55257DPL/DFL/DFTL/DTRL						UNIT
		-55V		-70V		-85V		
		MIN	MAX	MIN	MAX	MIN	MAX	
t_{WC}	Write Cycle Time	55	–	70	–	85	–	ns
t_{WP}	Write Pulse Width	45	–	50	–	60	–	
t_{CW}	Chip Enable to End of Write	50	–	60	–	65	–	
t_{AS}	Address Setup Time	0	–	0	–	0	–	
t_{WR}	Write Recovery Time	0	–	0	–	0	–	
t_{ODW}	R/W Low to Output High-Z	–	20	–	25	–	30	
t_{OEW}	R/W High to Output Active	5	–	5	–	5	–	
t_{DS}	Data Setup Time	25	–	30	–	40	–	
t_{DH}	Data Hold Time	0	–	0	–	0	–	

AC TEST CONDITIONS

Output load: 30 pF + one TTL gate (-55V)
100 pF + one TTL gate (-70L, -85L)
Input pulse level: 0.6 V, 2.4 V
Timing measurements: 1.5 V
Reference level: 1.5 V
t_R, t_F: 5 ns

AC CHARACTERISTICS AND OPERATING CONDITIONS (Ta = 0° to 70°C, V_{DD} = 2.7 to 5.5 V)

READ CYCLE

SYMBOL	PARAMETER	TC55257DPL/DFL/DFTL/DTRL				UNIT
		-55V/-70V		-85V		
		MIN	MAX	MIN	MAX	
t_{RC}	Read Cycle Time	120	–	150	–	ns
t_{ACC}	Address Access Time	–	120	–	150	
t_{CO}	Chip Enable Access Time	–	120	–	150	
t_{OE}	Output Enable Access Time	–	70	–	75	
t_{COE}	Chip Enable Low to Output Active	10	–	10	–	
t_{OEE}	Output Enable Low to Output Active	5	–	5	–	
t_{OD}	Chip Enable High to Output High-Z	–	50	–	50	
t_{ODO}	Output Enable High to Output High-Z	–	50	–	50	
t_{OH}	Output Data Hold Time	10	–	10	–	

WRITE CYCLE

SYMBOL	PARAMETER	TC55257DPL/DFL/DFTL/DTRL				UNIT
		-55V/-70V		-85V		
		MIN	MAX	MIN	MAX	
t_{WC}	Write Cycle Time	120	–	150	–	ns
t_{WP}	Write Pulse Width	80	–	100	–	
t_{CW}	Chip Enable to End of Write	100	–	120	–	
t_{AS}	Address Setup Time	0	–	0	–	
t_{WR}	Write Recovery Time	0	–	0	–	
t_{ODW}	R/W Low to Output High-Z	–	50	–	50	
t_{OEW}	R/W High to Output Active	5	–	5	–	
t_{DS}	Data Setup Time	50	–	60	–	
t_{DH}	Data Hold Time	0	–	0	–	

AC TEST CONDITIONS

Output load: 100 pF (including jig)
Input pulse level: 0.2 V, V_{DD} − 0.2 V
Timing measurements: 1.5 V
Reference level: 1.5 V
t_R, t_F: 5 ns

TIMING DIAGRAMS

READ CYCLE (See Note 1)

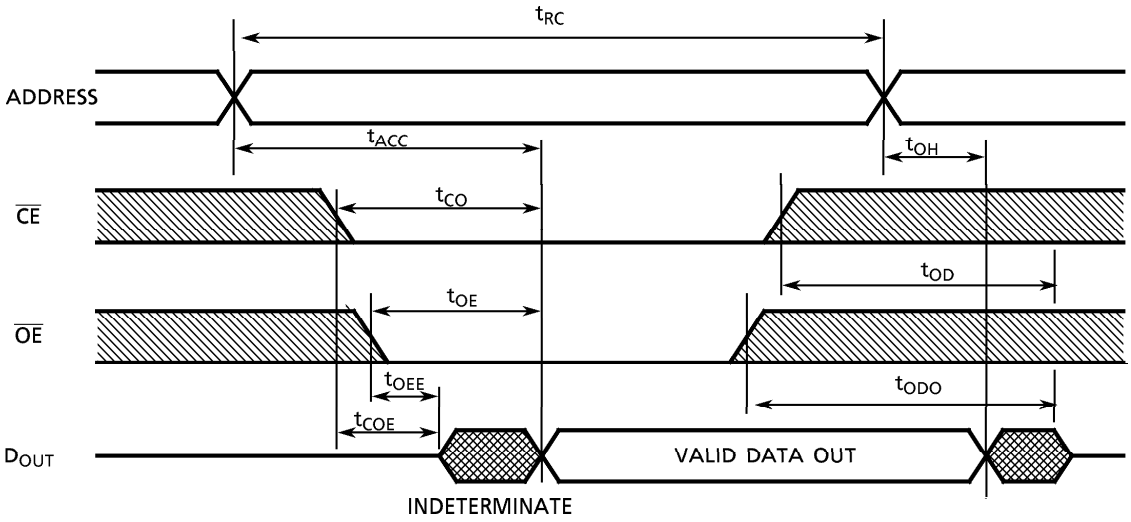

WRITE CYCLE 1 (R/W CONTROLLED) (See Note 4)

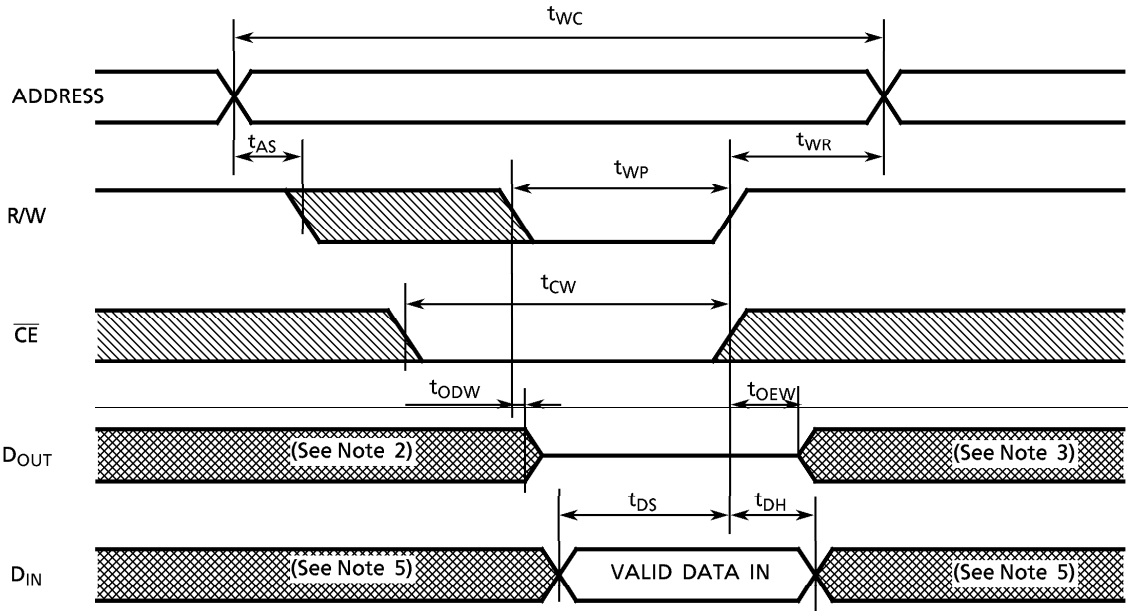

WRITE CYCLE 2 ($\overline{CE}$ CONTROLLED) (See Note 4)

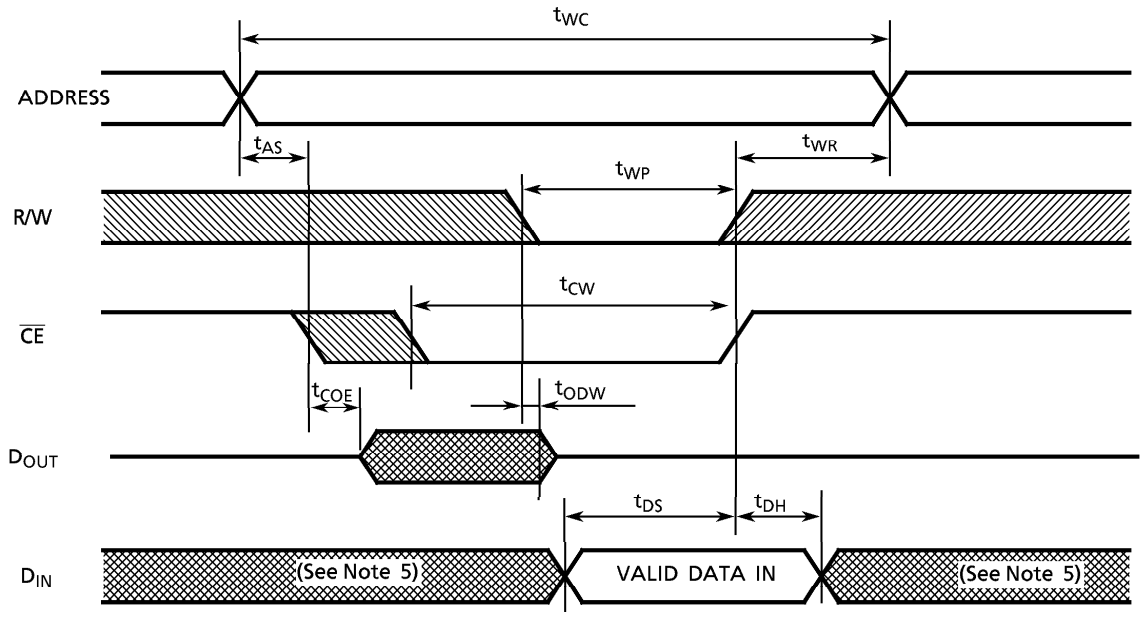

Note: (1) R/W remains HIGH for the read cycle.

(2) If $\overline{CE}$ goes LOW coincident with or after R/W goes LOW, the outputs will remain at high impedance.

(3) If $\overline{CE}$ goes HIGH coincident with or before R/W goes HIGH, the outputs will remain at high impedance.

(4) If $\overline{OE}$ is HIGH during the write cycle, the outputs will remain at high impedance.

(5) Because I/O signals may be in the output state at this time, input signals of reverse polarity must not be applied.

DATA RETENTION CHARACTERISTICS (Ta = 0° to 70°C)

SYMBOL	PARAMETER		MIN	TYP	MAX	UNIT
V_{DH}	Data Retention Supply Voltage		2.0	–	5.5	V
I_{DDS2}	Standby Current	V_{DH} = 3.0 V	–	–	10*	μA
		V_{DH} = 5.5 V	–	–	20	
t_{CDR}	Chip Deselect to Data Retention Mode Time		0	–	–	ns
t_R	Recovery Time		t_{RC} (See Note)	–	–	

* 2 μA (max) at Ta = 0° to 40°C

Note: Read cycle time.

$\overline{CE}$ CONTROLLED DATA RETENTION MODE

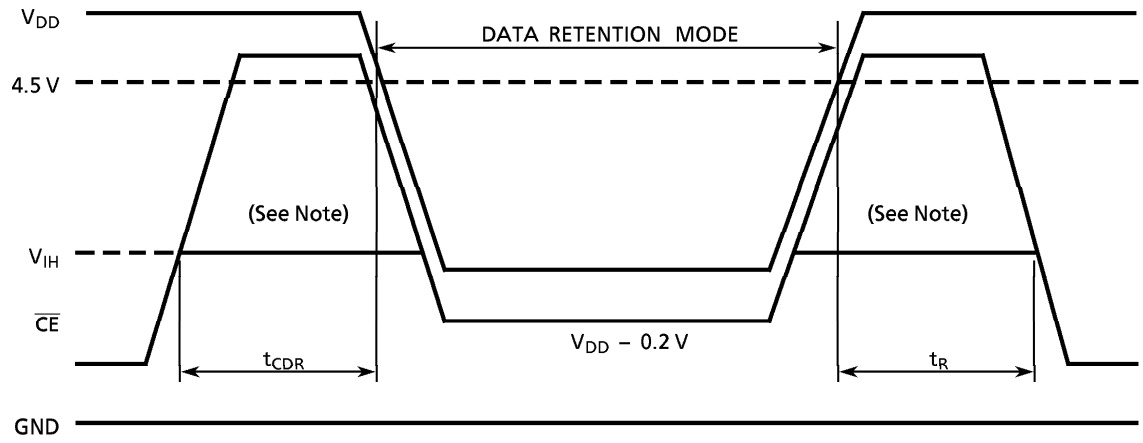

Note: When $\overline{CE}$ is operating at the V_{IH} level (2.2 V), the standby current is given by I_{DDS1} during the transition of V_{DD} from 4.5 to 2.4 V.

PACKAGE DIMENSIONS (DIP28-P-600-2.54)

Units in mm

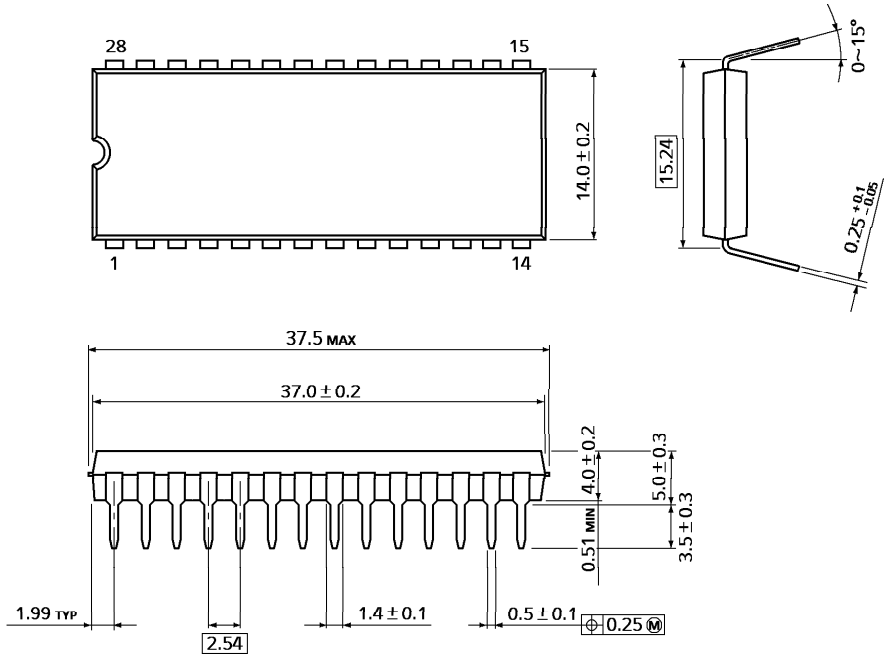

Weight: 4.42 g (typ)

PACKAGE DIMENSIONS (SOP28-P-450-1.27)

Units in mm

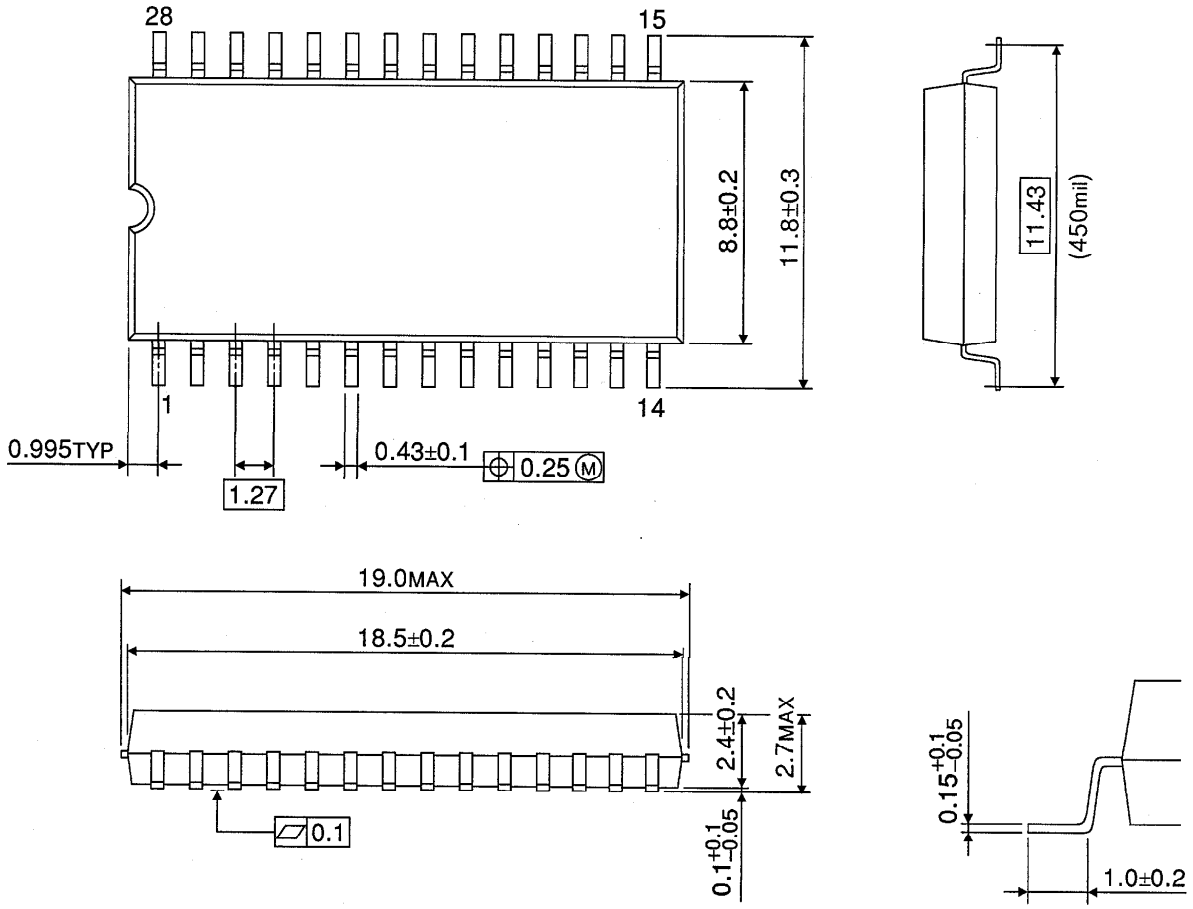

Weight: 0.79 g (typ)

PACKAGE DIMENSIONS (TSOP I 28-P-0.55)

Units in mm

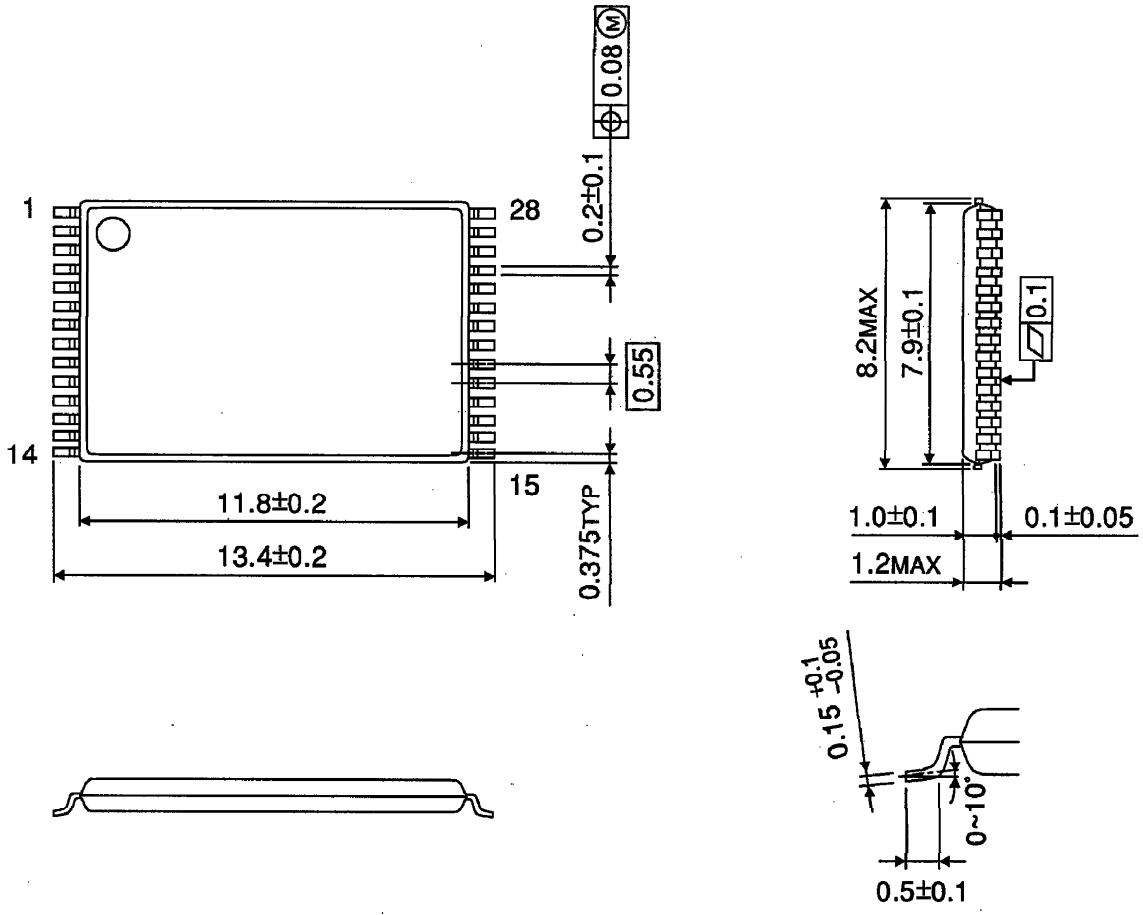

Weight: 0.22 g (typ)

PACKAGE DIMENSIONS (TSOP I 28-P-0.55A)

Units in mm

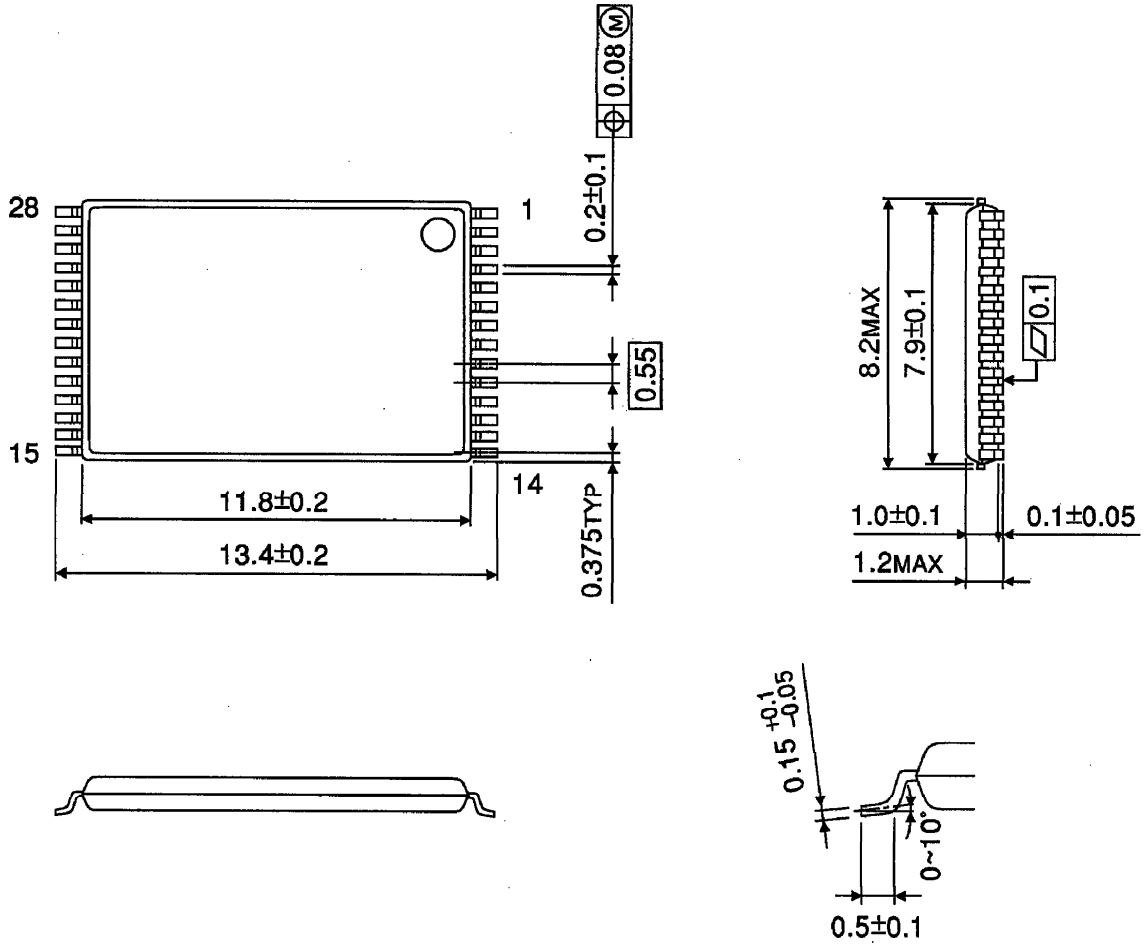

Weight: 0.22 g (typ)