TC5299J

FAST ETHERNET PCMCIA LAN CONTROLLER

TAMARACK M. I.
4FL No. 106 Hsin-Tai Wu Road,
Sec. 1, Hsichih,
Taipei Hsien, Taiwan R.O.C.
TEL: 886-2-2696-1669
FAX: 886-2-2696-2220
http:\\www.tmi.com.tw

Preliminary

TABLE OF CONTENTS

1 Introduction 3
1.1 General Description 3
1.2 Features 3
2 Block Diagram 3
3 Pin Description 4
3.1 Pin Out Diagram 4
3.2 Signal Description 5
3.3 Power On Configuration 8
4 I/O and Mapping 10
4.1 I/O Port Address Mapping 10
4.2 EEPROM/SRAM Memory Mapping 10
4.3 Attribute Memory Mapping 11
4.3.1 Attribute Memory Map 11
5 Configuration Registers 13
5.1 Configuration Register A 13
5.2 Configuration Register B 13
5.3 Configuration Register C 14
5.4 Hardware Configuration 14
5.5 MII/PHY Control Register 15
5.6 TC5299J Core Registers Assignment 15
5.7 Register Descriptions 18
5.7.1 Command Register (CR) 00H (Read/Write) 18
5.7.2 Data Configure register (DCR) 0EH(Write) 19
5.7.3 Transmit configuration Register (TCR) 0DH(Write) 19
5.7.4 Transmit Status Register (TSR) 04H(Read) 20
5.7.5 Receive Configuration Register (RCR) 0CH(Write) 21
5.7.6 Receive Status Register (RSR) 0CH(Read) 21
5.7.7 Interrupt Mask Register (IMR) 0FH(Write) 22
5.7.8 Interrupt Status Register (ISR) 07H(Read/Write) 23
5.8 Network Tally Counter Registers (CNTR) 23
5.9 Number of Collisions Register (NCR) 24
5.10 Physical Address Register (PAR0-PAR5) 24
5.11 Multicast Address Registers (MAR0-MAR7) 24
5.12 DMA Registers 25
5.13 LOCAL DMA RECEIVE REGISTERS 25
5.14 REMOTE DMA REGISTERS 25
5.15 (i) Local DMA Transmit Registers 25
5.16 (ii) Local DMA Receive Registers 26
5.17 (iii) Remote DMA registers 26
6 Electrical Specification and Timing 28
7 Physical Dimension 31
Notice 32

Preliminary

Fast Ethernet PCMCIA Controller

1 Introduction

1.1 General Description

The TC5299J is a 10/100 PCMCIA Ethernet controller, include a standard MII interface. It provides an 8/16-bit PCMCIA interface to host CPU and buffer memory into single chip to minimize the chip gate count.
The TC5299J supports both half-duplex and full-duplex (both 10BT or 100BTX) operation environment.

1.2 Features

- PCMCIA 2.01 bus interface.
- Use serial EEPROM 93C56/66 to store CIS.
- Internal 5V to 3.3V regulator.

Ethernet LAN features:

- Integrated Fast Ethernet MAC and SRAM in one chip.
- Supports both 10Mbps and 100Mbps operation.
- IEEE 802.3/802.3u compatible.
- Full-duplex or half-duplex operation supported for both 10Mbps and 100Mbps operation.
- NE2000 register definitions.
- Supports 3.3V or 5V signaling environment.
- The size of built-in Buffer RAM is 8k x 16 bits. It does not need the extra SRAM in the application circuit.
- Supports loop-back mode for self-testing.
- Supports 256/512 bytes EEPROM interface.
- LED interface supported.
- Supports MII bus interface.
- Flow control ability

2 Block Diagram

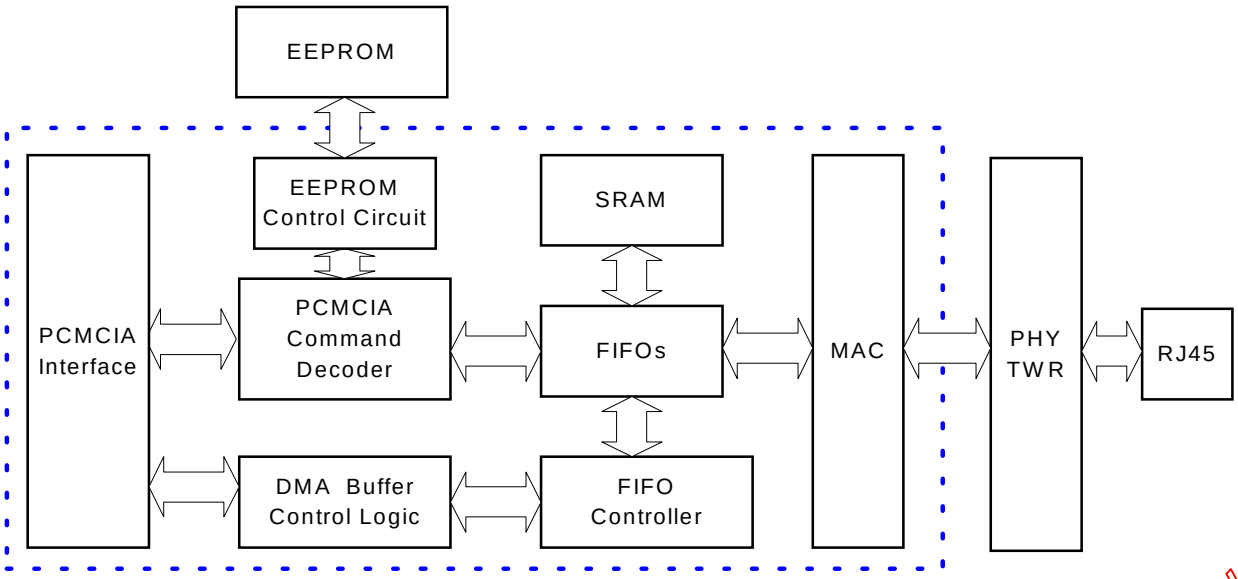

Preliminary

3 Pin Description

3.1 Pin Out Diagram

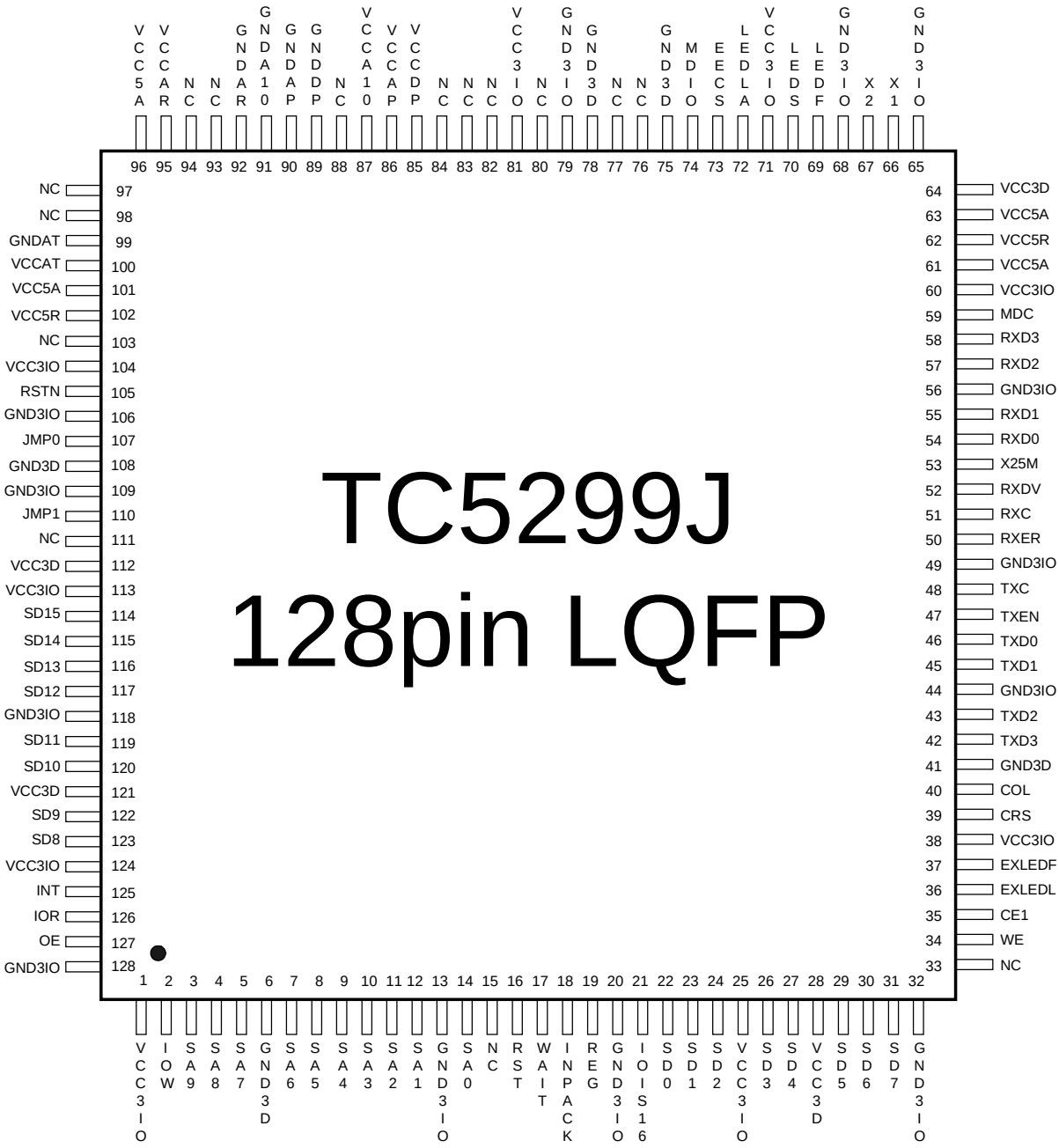

Preliminary

3.2 Signal Description

PCMCIA Bus Interface Pins

Symbol	Pin #	I/O	Description
SA[9:0]	3-5 7-12, 14	I	The address signal lines of PCMCIA Bus are used to select a register to be read or written and attribute memory enabled.
SD[15:8] SD[7:0]	114-117, 119-120, 122-123, 31-29, 27-26, 24-22	I/O	Register Access, with DMA inactive, SD0-SD7 are used to read/write register data. SD8-SD15 invalid during this state. Remote DMA Bus Cycle, SD0-SD15 contain packet data. Direction of transfer depends on Remote read/write.
RST	16	I/O	RST is active high and places the TC5299J in a reset mode immediately. During falling edge the TC5299J controller loads the configuration from JMP0 – JMP8.
RSTZ	105	O	RSTZ is an active low signal. It is an inverted signal of RST.
WAIT*	17	O	This pin is set low to insert wait states during Remote DMA transfer.
REG*	19	I	REG is an active low input used to determine whether a host access is to Attribute memory or to common memory. If REG is low the access is to attribute memory, if REG* is high the access is to common memory. REG* is also asserted low for all accesses to the TC5299J IO Registers.
IOR*	126	I	Read Strobe: Strobe from host to read registers or Remote DMA read.
IOW*	2	I	Write Strobe: Strobe from host to read registers or Remote DMA write.
OE*	127	I	Host memory read strobe, when OE* and REG* both low the attribute memory can be read. When OE* is low and REG* is high common memory can be read.
WE*	34	I	Host memory write strobe, After Power reset if TC5299J is configured to memory write enable, then WE and REG* is both low, Attribute memory can be written. When WE is low and REG* is high common memory can be written.
INPACK*	18	O	An active low signal. Asserted if the host access register or Remote DMA read cycle.
IO16*	21	O	IO16* is driven by TC5299J to support host 16 bits access cycle.
INT* (RDY/BSY*)	125	O	While the TC5299J is configured as a memory device, this pin servers as RDY/BSY* pin, If the TC5299J is ready to perform a transfer, this pin is set high. When TC5299J is operated at I/O mode, this pin is used as an interrupt pin. It indicates that the TC5299J needs host service. RDY/BSY* state can be read from the pin Replacement Register (CCR2). While LAN and MODEM both functions are enabled and IntSel bit in control Register (CCR5) is zero. This pin output is logical OR of LAN and MODEM interrupt.
CE1*	35	I	Card enable 1, is active low signals driven by the host. This signal provides a card select based on the address decode (decode by the host).

Preliminary

EEPROM/LED Interface Pins

Symbol	Pin #	I/O	Description
EECS	73	O	EEPROM chip select. It is asserted when to access EEPROM.
EESK/LEDLA	72	O	Link (on/off) & Receive data (Blink) LED pin. It is also used as a serial clock for EEPROM data loading.
DO/LEDS	70	I/O	Speed (100M:ON/10M:OFF) & transmit data (Blink) LED pin. It is also used as a signal for EEPROM data loading.
DI/LEDF	69	O	Full-duplex (ON/OFF, Full/Half-duplex) & Collision (Blink) LED pin. It is a data output pin for EEPROM writing.

External PHY / MII Interface Pins

Symbol	Pin #	I/O	Description
TXD[3:0]	42-43, 45-46	O	Four parallel transmit data lines. This data is synchronized to the assertion of the TXC signal and is latched by the external PHY on the rising edge of the TXC signal.
TXEN	47	I/O	This pin function as transmit enable. It indicates that a transmission is active on the MII port to an external PHY device. Pull down this pin on power-on reset to select 50MHz-clock input from pin X1. Otherwise, use 25MHz-clock input.
TXC	48	I	Supports the transmit clock supplied by the external PMD device. This clock should always be active.
RXD[3:0]	58-57, 55-54	I	Four parallel receive data lines. This data is driven by an external PHY that attached the media and should be synchronized with the RXC signal.
RXC	51	I	Supports receive clock from PHY. And is recovered by the PHY.
RXDV	52	I	Data valid is asserted by an external PHY when receive data is present on the RXD[3:0] lines and is deasserted at the end of the packet. This signal should be synchronized with the RXC signal.
RXER	50	I	Data valid is asserted by an external PHY when receive data is present on the RXD[3:0] lines and is deasserted at the end of the packet. This signal should be synchronized with the RXC signal.
COL	40	I	This pin functions as the collision detect. When the external physical layer protocol (PHY) device detects a collision, it asserts this pin.
CRS	39	I	In MII mode this pin functions as the carrier sense and is asserted by the PHY when the media is active.
MDC	59	O	MII management data clock is sourced by the TC5299J to the external PHY devices as a timing reference for the transfer of information on the MDIO signal.
MDIO	74	I/O	MII management data input/output transfers control information and status between the external PHY and the TC5299J.
EXLEDL	36	I	Low active; presents the external PHY link status.
EXLEDF	37	I	Present the half/full duplex mode for external PHY.

Clock Interface Pins

Symbol	Pin #	I/O	Description
X1	66	I	CRYSTAL OR EXTERNAL OSCILLATOR INPUT: 50 MHz
X2	67	O	CRYSTAL FEEDBACK OUTPUT: used in crystal connection only.
X25M	53	O	25MHz clock output

Preliminary

Power Supply Pins

Symbol	Pin #	I/O	Description
VCCAR GNDAR VCCA10 GNDA10 VCCAP GNDAP VCCDP GNDDP	95 92 87 91 86 90 85 89	PWR GND	Power input for internal circuit.
VCCAT GNDAT	100 99	PWR, GND	Power input for internal circuit.
VCC5A	101, 96, 63, 61	PWR	5V power input pin.
VCC5R	102, 62	PWR	5V power reference pin.
VCC3D, GND3D	121, 112, 28, 64 6, 41, 75, 78, 108	PWR, GND	3.3V power input pin, for digital core circuit.
VCC3IO GND3IO	1, 25, 38, 60, 71, 81, 104, 113, 124 13, 20, 32, 44, 49, 56, 65, 68, 79, 106, 118, 128	PWR, GND	3.3V power input pin, for I/O PAD.

JUMPER Interface Pins

Symbol	Pin #	I/O	Description
JMP0	107	I	When power on setting, this bit directly locked to CCR0, bit5. 0: enable I/O. For embedded system use to enable I/O mode. 1: disable I/O. For PCMCIA system use only. Default setting is leaving this pin open.
JMP1	110	I	Power on setting: 0: separate address decode. Decode range from A0 to A5. 1: full address decode. Decode range from A0 to A9.

No Connection Pins

Symbol	Pin #	I/O	Description
NC	15, 103, 111, 33		No Connection
NC	97, 98, 93, 94, 83, 77, 84, 82, 80, 76, 88		No Connection. Reserved for future use for PHY is included in a single chip.

Preliminary

3.3 Power On Configuration

The TC5299J Controller configures itself after a RST signal is applied. When a Power-On-Reset occurs the TC5299J controller latches up the values on the configuration pins and uses these to configure the internal registers and options. Internally these pins contain pull-up resistance. If pins are unconnected they have default logic. The configuration registers are loaded JMP0 & JMP1 setting when RST goes inactive.
A Power-On-Reset also causes the Controller to load the internal PROM from the EEPROM, which can take up to 3 ms. This occurs after "Config-Regs." has completed. If EECONFIG is high the configuration data loaded on the falling edge of RST will be overwritten with data read from the serial EEPROM. Regardless of the level on EECONFIG the PROM store will always be loaded with data from the serial EEPROM during the time specified as EELOAD.

Figure 1 shows how the RESET circuitry operates.

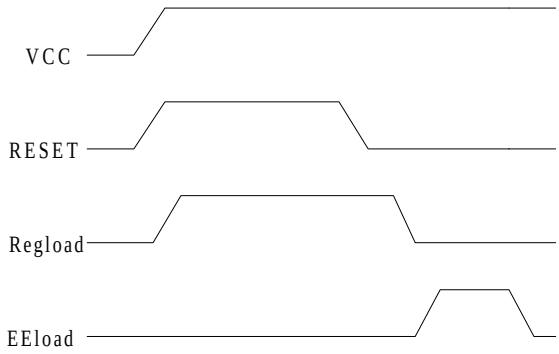

The TC5299J Controller use a 93C56/66 EEPROM, The programmed contents of the EEPROM is shown as following.

	D15 D8	D7 D0
	CIS byte n	CIS byte n-1
13H	.....	.....
12H	.....	.....
11H	CIS byte 3	CIS byte 2
10H	CIS byte 1	CIS byte 0
0FH	Not Used	Config C
0EH	Config. B	Config. A
:::::	Reserved	Reserved
08H	42H	42H
07H	57H	57H
:::::	Reserved	Reserved
04H	Reserved	Reserved
03H	Reserved	bit [0]: 8-bit enable bit [7:1]: Reserved
02H	E'net Address 5	E'net Address 4
01H	E'net Address 3	E'net Address 2
00H	E'net Address 1	E'net Address 0

EEPROM Programming Map

Preliminary

Storing and Loading Configuration from EEPROM:

During boot up the TC5299J Controller's configuration is read from the EEPROM, before the PROM data is read. The configuration data is stored within the address 0EH, 0FH (as above table) of the EEPROM's address space. Configuration Register A, B and C are located in the address 0EH.
To write this configuration into the EEPROM, the user can program register in TC5299J's address 02H of page 3. This operation will work regardless of the level on EECONFIG.

Preliminary

4 I/O and Mapping

4.1 I/O Port Address Mapping

This chip is register-liked with Novell's NE2000. The base I/O address of TC5299J Controller is configured by Configuration Register (either upon power up or by software writing to this register). At that address the following structure appears.

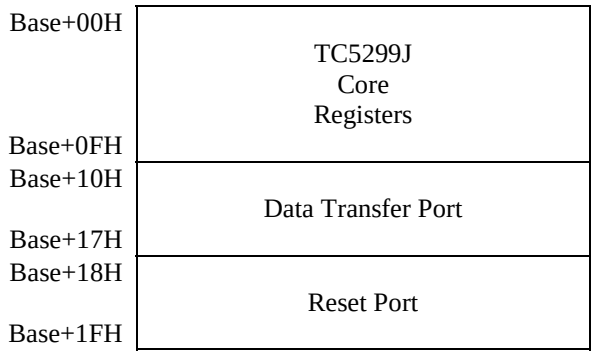

The registers within this area are 8 bits wide, but the data transfer port is 16 bits wide. By accessing the data transfer port (using I/O instructions) the user can transfer data to or from the TC5299J 's internal memory.

4.2 EEPROM/SRAM Memory Mapping

The TC5299J Controller's internal memory map is as shown below.

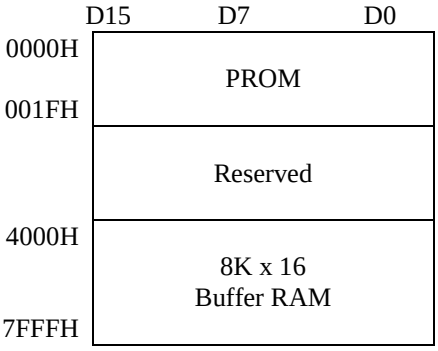

TC5299J Core Memory Map

PROM Location	Location Contents
00h	ETHERNET ADDRESS 0
01h	ETHERNET ADDRESS 1
02h	ETHERNET ADDRESS 2
03h	ETHERNET ADDRESS 3
04h	ETHERNET ADDRESS 4
05h	ETHERNET ADDRESS 5
06-0Dh	RESERVED
0E,0Fh	57h
10-15h	ETHERNET ADDRESS 0-5
16-1Dh	RESERVED
1E-1Fh	42h

Contents of PROM Map

Preliminary

TC5299J Controller actually has 32k-address range but only does partial decoding on these devices. 0000H – 001FH is PROM address and 4000H – 7FFFH is Buffer RAM address, otherwise is reserved. To access either the PROM or the RAM buffer which user must initiate a Remote DMA transfer between the I/O port and memory.

Remote Read/Write Cache:

The TC5299J Controller includes 4 words cache internally. On a remote read the TC5299J Controller moves data from memory buffer to the cache buffer; the TC5299J moves data continuously until the cache buffer is full. On a remote write the system can writes data into the cache buffer until the 4 words cache buffer is full.

4.3 Attribute Memory Mapping

PCMCIA CIS Structures & Decode Function:

The TC5299J supports access to 1K of attribute Memory. Attribute memory is defined by the PCMCIA standard to be comprised of the card information structure and four 8-bits Card Configuration Registers. These four registers are contained in the TC5299J.

4.3.1 Attribute Memory Map

The attribute Memory map for a PCMCIA card is shown below.

Address	Description
00H-3E0H	Attribute Memory
3F0H (CCR4)	I/O Event indication Register
3F2H (CCR5)	Control Register
3F4H-3F6H	Reserved
3F8H(CCR0)	Configuration Option Register
3FAH(CCR1)	Card Configuration and Status Register
3FCH(CCR2)	Pin Replacement Register
3FEH(CCR3)	Reserved

Card Option Registers 0 (R/W): 3F8H (CCR0)

D7	D6	D5	D4	D3	D2	D1	D0
SRESET	XX	PCMIOEN	XX	XX	XX	PJ1	PJ0

Name	Description
PJ0-PJ1	If JMP1 pulled low during power on reset and FUNC=0, The two bits select one of 4 I/O base address. (shows as below)
PCMIOEN	To set high make the card enter I/O mode. The function also can be set by JMP0 (MCS) when Power On Reset.
SRESET	Setting this bit to high, place the card enter reset mode.
XX	Reserved

JMP1 does not pull-low during power on reset.

Preliminary

Ethernet I/O address range

PJ1	PJ0	Address Range
0	0	300H-31FH
0	1	320H-33FH
1	0	340H-35FH
1	1	360H-37FH

Card Configuration and Status Registers (R/W): 3FAH (CCR1)

D7	D6	D5	D4	D3	D2	D1	D0
XX	XX	XX	XX	XX	XX	Ireq	XX

Name	Description
Ireq	Interrupt. This bit describes the interrupt signal of LAN or MODEM 1: LAN interrupt 0: Modem interrupt
XX	Reserved

Preliminary

5 Configuration Registers

5.1 Configuration Register A

To prevent any accidental writes of this register it is"hidden" behind a previously unused register. Register 0AH in the Controller's Page 0 of registers was previously reserved on a read. Now Configuration Register A can be read at that address and can be written to by following a read to 0AH with a write to 0AH. If any other Controller register accesses take place between the read and the write then the write to 0AH will access the Remote Byte Count Register 0.

7	6	5	4	3	2	1	0
XX	FREAD	FDUPLEX	LNK_CFG	FULL_CFG	IO16CON	MIISEL1	MIISEL0

Name	R/W	Description
MIISEL[1:0]	R/W	10: Default value to active the MII bus. Other: reserved.
IO16CON	R/W	When this bit is set high the Controller generates IO16* after REG* active. If low this output is generated only on address decode.
FULL_CFG	R/W	The bit is described EXLEDF what the polarity is. 0: Low active/ Hi inactive 1: Hi active/ Low inactive
LNK_CFG	R/W	The bit is described EXLEDL what the polarity is. 0: Low active/ Hi inactive 1: Hi active/ Low inactive
FDUPLEX	R	The Full-Duplex setting bit. 1: Full-duplex mode, 0: Half-duplex mode
PCMIOALL	EL	The bit is indicated the decode-number of SA[9:0]. 0: Only decode 5 address-lines, SA[5:0]. 1: Full decode 10 address-lines, SA[9:0].
FREAD	R/W	The TC5299J Controller supports 4 words Remote DMA read/write cache. When this bit is set high, Remote DMA cache control will be enabled.
XX		Reserved

PS. EL: The bit only set on EEPROM loading.

5.2 Configuration Register B

To prevent any accidental writes of his register it is "hidden" behind a previously unused register. Register 0BH in the Controller's Page 0 of registers was previously reserved on a read. Now Configuration Register B can be read at that address and can be written to by following a read to 0BH with a write to 0BH. If any other Controller register accesses take place between the read and the write then the write to 0BH will access the Remote Byte Count Register 1.

7	6	5	4	3	2	1	0
XX	LINT	EXTRMII	MIICINT	MIICIM	LINK	LCINT	LCIM

Name	R/W	Description
LCIM	R/W	The interrupt mask bit for link status changed. When set to "1", the Interrupt will generate on link status changed.

Preliminary

LCINT	R/W	The Link-Changed interrupt report bit. 1: indicates the Link status changed.
LINK	R	When this bit is high, link test integrity checking is good. Otherwise, indicate link signal lost.
MIICIM	R/W	This bit should be set to 0.
MIICINT	R/W	This bit should be set to 0.
EXTRMII	R	This bit should be set to 0.
LINT	R/W	LAN interrupt status indicator. To write a one to this bit can reset it.
XX	X	Reserved

5.3 Configuration Register C

This register just set in EEPROM and it can't been read from user.

7	6	5	4	3	2	1	0
XX	XX	XX	FE	RBHI1	RBHI0	RBLO1	RBLO0

Name	R/W	Description
RBLO [1:0]	X	This is low value of receive buffer setting on full-duplex flow-control. It means that are few data in Rx buffer. 00: Less than 1.5K data in Rx buffer. 01: Less than 3k data in Rx buffer. 10: Less than 4.5k data in Rx buffer. 11: Less than 6k data in Rx buffer.
RBHI [1:0]	X	That is high value of receive buffer setting on full-duplex flow-control. It means that is few space in Rx buffer. 00: Less than 1.5K space in Rx buffer. 01: Less than 3k space in Rx buffer. 10: Less than 4.5k space in Rx buffer. 11: Less than 6k space in Rx buffer.
FE	X	Flow control enable bit in full-duplex mode. 0: Disable flow-control. 1: Enable flow-control.
XX	X	Reserved

PS. X: Can't read, just set these bit in the EEPROM.

5.4 Hardware Configuration

These functions are configured during a power on RESET.

Symbol	I/O	Description
JMP0	I/O	Power on setting: 0: Enter I/O mode (Same as CCR0, bit 5)
JMP1	I/O	Power on setting: 1: Full address decode(A9-A0) 0: Separate address decode(A5-A0)

Preliminary

Programming Register (R/W)

The Controller enable software (driver) programming EEPROM or testing interrupt signal through this register directly. It is located at core register Page3 base+02H.

7	6	5	4	3	2	1	0
EESEL	FIRQ	XX	READ	CS	SK	DI	DO(r) ATTRDIS

Name	Description
EESEL, CS, SK, DI, DO	The software can read or programming serial EEPROM directly through accesses these bits. EESEL should be set high before starting the EEPROM read/write.
FIRQ	This chip interrupt signal IRQ will be asserted when this bit is set high.
READ	TC5299J can reload CFGA, CFGB and internal PROM, if this bit is set high. When reload state is completed, READ will be cleared to low.
ATTRDIS	Attribute and common memory access will be disable if it is programmed to high. NOTE: DO: read only ATTRDIS: write only

5.5 MII/PHY Control Register

The controller can access PHYTER register via software driver. It is located at core register Page3 base+03H.

7	6	5	4	3	2	1	0
XX	FE	XX	XX	MDI	MDIR	MDO	MDC

Name	R/W	Description
MDC	W	MII Management Clock
MDO	W	MII Management Write Data.
MDIR	W	MII Management Operation Mode Defines the operation of PHY. When set, the PHY is in read operation mode. When clear, the PHY is in write operation mode.
MDI	R	MII Management Data In.
FE	R/W	Flow control enable bit in full-duplex mode. The bit can be set when EEPROM loading. 0: Disable flow-control. 1: Enable flow-control.
XX	X	Reserved

5.6 TC5299J Core Registers Assignment

All registers are 8-bit wide and mapped into four pages, which are selected in the Command Register (PS0, PS1).

Preliminary

Pins A0-A3 are used to address registers within each page. Page 0 register are those registers which are commonly accessed during TC5299J Controller operation while Page 1 registers are used primarily for initialization. The registers are partitioned to avoid having to perform two read/write cycles to access commonly used registers.

Register Assignments:

Page 0 Address Assignments (PS1=0,PS0=0)

A0-A3	RD	WR
00H	Command(CR)	Command(CR)
01H	Current Local DMA Address 0 (CLDA0)	Page Start Register (PSTART)
02H	Current Local DMA Address 1 (CLDA1)	Page Stop Register (PSTOP)
03H	Boundary Pointer (BNRY)	Boundary Pointer (BNRY)
04H	Transmit Status Register(TSR)	Transmit Page Start Address (TPSR)
05H	Number of Collisions Register(NCR)	Transmit Byte Count Register 0 (TBCR0)
06H	FIFO(FIFO)	Transmit Byte Count Register 1 (TBCR1)
07H	Interrupt Status Register(ISR)	Interrupt Status Register(ISR)
08H	Current Remote DMA Address 0(CRDA0)	Remote Start Address Register 0(RSAR0)
09H	Current Remote DMA Address 1(CRDA1)	Remote Start Address Register 1(RSAR1)
0AH	Config. Register A (CFGA)	Remote Byte Count Register 0(RBCR0)
0BH	Config. Register B (CFGB)	Remote Byte Count Register 1(RBCR1)
0CH	Receive Status Register(RSR)	Receive Configuration Register(RCR)
0DH	Tally Counter 0(Frame alignment Errors) (CNTR0)	Transmit Configuration Register(TCR)
0EH	Tally Counter 1 (CRC errors) (CNTR1)	Data Configuration Register(DCR)
0FH	Tally Counter 2 (Missed Packet Errors) (CNTR2)	Interrupt Mask Register(IMR)

Page 1 Address Assignments (PS1=0,PS0=1)

A0-A3	RD	WR
00H	Command(CR)	Command(CR)
01H	Physical Address Register 0(PAR0)	Physical Address Register 0(PAR0)
02H	Physical Address Register 1(PAR1)	Physical Address Register 1(PAR1)
03H	Physical Address Register 2(PAR2)	Physical Address Register 2(PAR2)
04H	Physical Address Register 3(PAR3)	Physical Address Register 3(PAR3)
05H	Physical Address Register 4(PAR4)	Physical Address Register 4(PAR4)
06H	Physical Address Register 5(PAR5)	Physical Address Register 5(PAR5)
07H	Current Page Register(CURR)	Current Page Register(CURR)
08H	Multicast Address Register 0(MAR0)	Multicast Address Register 0(MAR0)
09H	Multicast Address Register 1(MAR1)	Multicast Address Register 1(MAR1)
0AH	Multicast Address Register 2(MAR2)	Multicast Address Register 2(MAR2)
0BH	Multicast Address Register 3(MAR3)	Multicast Address Register 3(MAR3)
0CH	Multicast Address Register 4(MAR4)	Multicast Address Register 4(MAR4)
0DH	Multicast Address Register 5(MAR5)	Multicast Address Register 5(MAR5)

Preliminary

Page 1 Address Assignments (PS1=0,PS0=1)

A0-A3	RD	WR
0EH	Multicast Address Register 6(MAR6)	Multicast Address Register 6(MAR6)
0FH	Multicast Address Register 7(MAR7)	Multicast Address Register 7(MAR7)

Page 2 Address Assignments (PS1=1,PS0=0)

A0-A3	RD	WR
00H	Command(CR)	Command(CR)
01H	Page Start Register (PSTART)	Current Local DMA Address 0(CLDA0)
02H	Page Stop Register (PSTOP)	Current Local DMA Address 1(CLDA1)
03H	Remote Next Packet Pointer	Remote Next Packet Pointer
04H	Transmit Page Start Address(TPSR)	Reserved
05H	Local Next Packet Pointer	Local Next Packet Pointer
06H	Address Counter (Upper)	Address Counter (Upper)
07H	Address Counter (Lower)	Address Counter (Lower)
08H	Reserved	Reserved
09H	Reserved	Reserved
0AH	Reserved	Reserved
0BH	Reserved	Reserved
0CH	Receive Configuration Register(RCR)	Reserved
0DH	Transmit Configuration Register(TCR)	Reserved
0EH	Data Configuration Register(DCR)	Reserved
0FH	Interrupt mask Register(IMR)	Reserved

Note: Page 2 registers should only be accessed for diagnostic purposes. They should not be modified during normal operation. Page 3 Reserved should never be modified.

Page 3 Address Assignments (PS1=1,PS0=1)

A0-A3	RD	WR
00H	Command(CR)	Command(CR)
01H	Reserved	Reserved
02H	Programming Reg.	Programming Reg.
03H	MII Control Register	MII Control Register
04H	Reserved	Reserved
05H	Reserved	Reserved
06H	Reserved	Reserved
07H	Reserved	Reserved
08H	Reserved	Reserved
09H	Reserved	Reserved
0AH	Reserved	Reserved
0BH	Reserved	Reserved

Preliminary

Page 3 Address Assignments (PS1=1,PS0=1)

A0-A3	RD	WR
0CH	Reserved	Reserved
0DH	Reserved	Reserved
0EH	Reserved	Reserved
0FH	Reserved	Reserved

5.7 Register Descriptions

5.7.1 Command Register (CR) 00H (Read/Write)

The Command Register is used to initiate transmissions, enable or disable Remote DMA operations and to select register pages. To issue a command the microprocessor sets the corresponding bit(s) (RD2, RD1, RD0 and TXP). Further commands may be overlapped, but with the following rules: (1) if a transmit command overlaps with a remote DMA operation, bits RD0, RD1, and RD2 must be maintained for the remote DMA command when setting the TXP bit. Note, if a remote DMA command is re-issued when giving the transmit command, the DMA will complete immediately if the remote byte count register have not been reinitialized. (2) If a remote DMA operation overlaps a transmission, RD0, RD1, and RD2 may be written with the desired values and a "0"to this bit has no effect. (3) A remote write DMA may not overlap remote read operation or visa versa. Either of these operations must either complete or be aborted before the other operation may start. Bits PS1, PS0, RD2, and STP may be set any time.

7	6	5	4	3	2	1	0
PS1	PS0	RD2	RD1	RD0	TXP	STA	STP

Bit	Symbol	Description
D0	STP	Stop: Software reset command, take the controller offline, no packets will be received or transmitted. Any reception of transmission in progress will continue to completion before entering the reset state. To exit this state, the STP bit must be reset. The software reset has executed only when indicated by the RST bit in the ISR being set to a 1. STP powers up high.
D1	STA	Start: This bit is used to active the TC5299J core after either power up, or when the TC5299J core has been placed in a reset mode by software command. STA power up low.
D2	TXP	Transmit Packet: This bit must be set to initiate transmission of a packet. TXP is internally reset either after the transmission is completed or aborted. This bit should be set only after the Transmit Byte Count and Transmit Page Start registers have been programmed. TXP powers up low.
D3-D5	RD0-RD2	Remote DMA Command: These three encoded bits control operation of the Remote DMA channel. RD2 can be set to about any Remote DMA command in progress. The Remote Start Addresses are not restored to the starting address if the Remote DMA is aborted. RD2 powers up high. RD2 RD1 RD0 0 0 0 Not Allowed 0 0 1 Remote Read 0 1 0 Remote Write (Note) 0 1 1 Send Packet 1 X X Abort/Complete Remote DMA (Note)
D6,D7	PS0,PS1	Page Select: Three two encoded bits select which register page is to be accessed with addresses A0-3. PS1 PS0 0 0 Register Page 0

Preliminary

Bit	Symbol	Description
		0 1 Register Page 1 1 0 Register Page 2 1 1 Register Page 3

5.7.2 Data Configure register (DCR) 0EH(Write)

This Register is used to program the TC5299J for 8 or 16-bit memory interface, select byte ordering in 16-bit applications and establish FIFO thresholds. The DCR must be initialized prior to loading the Remote Byte count Registers.

7	6	5	4	3	2	1	0
-	FT1	FT0	-	LS	-	-	WTS

Bit	Symbol	Description
D0	WTS	Word Transfer Select 0: Selects byte-wide DMA transfers. 1: Selects word-wide DMA transfers Note: When word-wide mode is selected, up to 32k bytes are addressable; A0 remains low.
D1	-	Reserved
D2	-	Reserved
D3	LS	Loopback Select 0: Loopback mode selected. Bits D1, D2 of the TCR must also be programmed for Loopback mode selected. 1: Normal Operation.
D4	-	Reserved
D5,D6	FT0,FT1	FIFO Threshold Select: Encoded: FIFO threshold. During reception, the FIFO threshold indicates the number of bytes (or words) the FIFO has filled serially from the network before the FIFO is emptied onto memory bus. RECEIVE THRESHOLDS FT1 FT0 Word Wide Byte Wide 0 0 2 Word 4 Bytes 0 1 4 Word 8 Bytes 1 0 8 Word 16 Bytes 1 1 12 Word 24 Bytes During transmission, the FIFO threshold indicates the number of bytes (of words) the FIFO has filled from the Local DMA before being transferred to the memory. Thus, the transmission threshold is 16 bytes less the receive threshold.

5.7.3 Transmit configuration Register (TCR) 0DH(Write)

The transmit configuration establishes the actions of the transmitter section of the TC5299J during transmission of a packet on the network, LB1 and LB0 power up as 0.

7	6	5	4	3	2	1	0
-	-	-	OFST	ATD	LB1	LB0	CRC

Bit	Symbol	Description
D0	CRC	Inhibit CRC

Preliminary

		0: CRC appended by transmitter 1: CRC inhibited by transmitter
D1,D2	LB0,LB1	Encoded Loopback Control: These encoded configuration bits set the type of loopback that is to be performed. Note that loopback in mode 2 sets the LPBK pin high, this places the TC5299J in loopback mode and that D2 of the DCR must be set to zero for loopback operation. LB1 LB0 Mode0 0 0 Normal Operation (LPBK=0) Mode1 0 1 Internal Loopback (LPBK=0) Reserved 1 0 Reserved 1 1
D3	-	Reserved
D4	OFST	Collision Offset Enable: This bit modifies the back off algorithm to allow prioritization of nodes. 0: Backoff Logic implements normal algorithm. 1: Forces Backoff algorithm modification to 0 to $2^{mim(3+n,10)}$ slot times for first three collisions, Then follows standard backoff. (For first three collisions station has higher average backoff delay making a low priority mode.)
D5	-	Reserved
D6	-	Reserved
D7	-	Reserved

5.7.4 Transmit Status Register (TSR) 04H(Read)

This register records events that occur on the media during transmission of a packet. It is cleared, when the next transmission is initiated by the host. All bits remain low unless the event that corresponds to a particular bit occurs during transmission. Each transmission should be followed by a read of this register. The contents of this register are not specified until after the first transmission.

7	6	5	4	3	2	1	0
OWC		FU	CRS	ABT	COL	-	PTX

Bit	Symbol	Description
D0	PTX	Packet Transmitted: Indicates transmission without error (No excessive collisions or FIFO underrun) (ABT="0", FU="0").
D1	-	Reserved
D2	COL	Transmit Collided: Indicates that the transmission collided at least once with another station on the network. The number of collisions is recorded in the Number of Collisions Registers. (NCR).
D3	ABT	Transmit Aborted: Indicates the TC5299J aborted transmission because of excessive collisions. (Total number of transmissions including original transmission attempt equals 16).
D4	CRS	Carrier Sense Lost: This bit is set when carrier is lost during transmission of the packet. Carrier Sense is monitored from the end of Preamble/Synch until TXE is dropped. Transmission is not aborted on loss of carrier.
D5	FU	FIFO Underrun: If the TC5299J cannot gain access of the bus before the FIFO empties, this bit is set. Transmission of the packet will be aborted.
D6	-	Reserved
D7	OWC	Out of Window Collision: Indicates that a collision occurred after a slot time. Transmissions rescheduled as in normal collisions.

Preliminary

5.7.5 Receive Configuration Register (RCR) 0CH(Write)

This register determines operation of the TC5299J during reception of a packet and is used to program what types of packets to accept.

7	6	5	4	3	2	1	0
-	-	MON	PRO	AM	AB	AR	SEP

Bit	Symbol	Description
D0	SEP	Save Errored Packets 0: Packets with receive errors are rejected. 1: Packets with receive errors are accepted. Receive errors are CRC and Frame Alignment errors.
D1	AR	Accept Runt Packets 0: Packets with fewer than 64 bytes rejected. 1: Packets with fewer than 64 bytes accepted.
D2	AB	Accept Broadcast 0: Packets with all 1's broadcast destination address rejected. 1: Packets with all 1's broadcast destination address accepted.
D3	AM	Accept Multicast 0: Packets with multicast destination address not checked. 1: Packets with multicast destination address checked.
D4	PRO	Promiscuous Physical 0: Physical address of node must match the station address programmed in PAR0-PAR5. (Physical address checked) 1: All packets with any physical address accepted. (physical address not checked)
D5	MON	Monitor Mode: Enables the receiver to check addresses and CRC on incoming packets without buffering to memory. The missed packet Tally counter will be incremented for each recognized packet. 0: Packets buffered to memory. 1: Packets checked for address match, good CRC and frame Alignment but not buffered to memory.
D6	-	Reserved
D7	-	Reserved

Note:
D2 and D3 are "OR'd" together, i. e., if D2 and D3 are set the TC5299J will accept broadcast and multicast addresses as well as its own physical address. To establish full promiscuous mode, bits D2, D3 and D4 should be set. In addition the multicast hashing array must be set to all 1's in order to accept all multicast addresses.

5.7.6 Receive Status Register (RSR) 0CH(Read)

This register records status of the received packet, including information on errors and the type of address match, either physical or multicast. The contents of this register are written to buffer memory by the DMA after reception of a good packet. If packets with errors are to be saved the receive status is written to memory at the head of the erroneous packet if an erroneous packet is received. If packets with errors are to be rejected the RSR will not be written to memory. The contents will be cleared when the next packet arrives. CRC errors, frame Alignment errors and missed packets are counted internally by the TC5299J which relinquishes the Host from reading the RSR in real time to record errors for Network Management functions. The contents of this register are not specified until after the first reception.

7	6	5	4	3	2	1	0

Preliminary

DFR	DIS	PHY	MPA	FO	FAE	CRC	PRX

Bit	Symbol	Description
D0	PRX	Packet Received Intact: Indicates packet received without error. (Bits CRC, FAE, FO and MPA are zero for the received packet.)
D1	CRC	CRC Error: Indicates packet received with CRC error. Increments Tally Counter (CNTR1). This bit will also be set for Frame Alignment errors.
D2	FAE	Frame Alignment Error: Indicates that the incoming packet did not end on a byte boundary and the CRC did not match at last byte boundary. Increments Tally counter (CNTR0).
D3	FO	FIFO Overrun: This bit is set when the FIFO is not serviced causing overflow during reception. Reception of the packet will be aborted.
D4	MPA	Missed Packet: Set when packet intended for node cannot be accepted by TC5299J because of a lack of receive buffers of if the controller is in monitor mode and did not buffer the packet to memory. Increments Tally Counter (CNTR2).
D5	PHY	Physical/Multicast Address: Indicates whether received packet had a physical or multicast address type 0: Physical Address Match 1: Multicast/Broadcast Address Match
D6	DIS	Receiver Disabled: Set when receiver disabled by entering Monitor mode. Reset when receiver is re-enabled when exiting Monitor mode.
D7	DFR	Deferring: Set when CRS or COL inputs are active. If the transceiver has asserted the CD line as a result of the jabber, this bit will stay set indicating the jabber condition.

Note: Following coding applies to CRC and FAE bits

FAE	CRC	Type of Error
0	0	No error (Good CRC and <6 Dribble Bits)
0	1	CRC ERROR
1	0	Legal, will not occur
1	1	Frame Alignment Error and CRC Error

5.7.7 Interrupt Mask Register (IMR) 0FH(Write)

The interrupt Mask Register is used to mask interrupts. Each interrupt mask bit corresponds to a bit in the Interrupt Status Register (ISR). If an interrupt mask bit is set, an interrupt will be issued whenever the corresponding bit in the ISR is set. If any bit in the IMR is set low, an interrupt will not occur when the bit in the ISR is set. The IMR powers up all zeroes.

7	6	5	4	3	2	1	0
-	RDCE	CNTE	OVWE	TXEE	RXEE	PTXE	PRXE

Bit	Symbol	Description
D0	PRXE	Packet Received Interrupt Enable: Enables Interrupt when packet received.
D1	PTXE	Packet Transmitted Interrupt Enable: Enables Interrupt when packet is transmitted.
D2	RXEE	Receive Error Interrupt Enable: Enables Interrupt when packet received with error.
D3	TXEE	Transmit Error Interrupt Enable: Enables Interrupt when packet transmission results in error.
D4	OVWE	Over Write Warning Interrupt Enable: Enables Interrupt when Buffer management Logic lacks sufficient buffers to store incoming packet.
D5	CNTE	Counter Overflow Interrupt Enable: Enables Interrupt when MSB of one or more

Preliminary

Bit	Symbol	Description
		of the Network Tally counters has been set.
D6	RDCE	DMA Complete Interrupt Enable: Enables Interrupt when Remote DMA transfer has been completed.
D7	-	Reserved

5.7.8 Interrupt Status Register (ISR) 07H(Read/Write)

This register is accessed to determine the cause of an interrupt. Any interrupt can be masked in the interrupt Mask Register (IMR). Individual interrupt bits are cleared by writing a "1" into the corresponding bit of the ISR.
The IRQ signal is active as long as any unmasked signal is set, and will not go low until all unmarked bits in this register have been cleared. The ISR must be cleared after power up by writing it with all 1's.

7	6	5	4	3	2	1	0
RST	RDC	CNT	OVW	TXE	RXE	PTX	PRX

Bit	Symbol	Description
D0	PRX	Packet Received: Indicates packet received with no errors.
D1	PTX	Packet Transmitted: Indicates packet transmitted with no errors.
D2	RXE	Receive Error: Indicates that a packet was received with one or more of the following errors: - CRC Error - Frame Alignment Error - FIFO Overrun - Missed Packet
D3	TXE	Transmit Error: Set when packet transmitted with one or more of the following errors: - Excessive Collisions - FIFO Underrun
D4	OVW	Over Write Warning: Set when receive buffer ring storage resources have been exhausted. (Local DMA has reached Boundary Pointer).
D5	CNT	Counter Over flow: Set when MSB of one or more of the Network Tally Counters has been set.
D6	RDC	Remote DMA Complete: Set when Remote DMA operation has been completed.
D7	RST	Reset Status: A status indicator with no interrupt generated - Set when TC5299J enters reset state and is cleared when a start command is issued - Set when a Receive Buffer Ring overflows and is cleared when leaves overflow status. Writing to this bit has no effect and powers up high.

5.8 Network Tally Counter Registers (CNTR)

Three 8-bit counters are provided for monitoring the number of CRC errors, Frame Alignment Errors and missed packets, The maximum count reached by any counter is 192 (C0H). These registers will be cleared when read by the CPU. The count is recorded in binary in CT0-CT7 of each Tally Register.

CNTR0: Monitor the number of Frame Alignment error

7	6	5	4	3	2	1	0
CT7	CT6	CT5	CT4	CT3	CT2	CT1	CT0

CNTR1: Monitor the number of CRC error

Preliminary

7	6	5	4	3	2	1	0
CT7	CT6	CT5	CT4	CT3	CT2	CT1	CT0

CNTR2: Monitor the number of Missed Packets

7	6	5	4	3	2	1	0
CT7	CT6	CT5	CT4	CT3	CT2	CT1	CT0

5.9 Number of Collisions Register (NCR)

This register contains the number of collisions a node experiences when attempting to transmit a packet. If no collisions are experienced during a transmission attempt, the COL bit of the TSR will not be set and the contents of NCR will be zero. If there are excessive collisions, the ABT bit in the TSR will be set and the contents of NCR will be zero. The NCR is cleared after the TXP bit in the CR is set.

7	6	5	4	3	2	1	0
-	-	-	-	NC3	NC2	NC1	NC0

5.10 Physical Address Register (PAR0-PAR5)

The physical address registers are used to compare the destination address of incoming packets for rejecting or accepting packets. Comparisons are performed on a byte-wide basis. The bit assignment shown below relates the sequence in PAR0-PAR5 to the bit sequence of the received packet.

..	Syn	Syn	DA0	DA1	DA2	DA3	DA4	DA5	DA6	DA7	..

|------- Destination Address --------|--- Source

	D7	D6	D5	D4	D3	D2	D1	D0
PAR0	DA7	DA6	DA5	DA4	DA3	DA2	DA1	DA0
PAR1	DA15	DA14	DA13	DA12	DA11	DA10	DA9	DA8
PAR2	DA23	DA22	DA21	DA20	DA19	DA18	DA17	DA16
PAR3	DA31	DA30	DA29	DA28	DA27	DA26	DA25	DA24
PAR4	DA39	DA38	DA37	DA36	DA35	DA34	DA33	DA32
PAR5	DA47	DA46	DA45	DA44	DA43	DA42	DA41	DA40

5.11 Multicast Address Registers (MAR0-MAR7)

The Multicast address registers provide filtering of multicast addresses hashed by the CRC logic. All destination addresses are fed through the CRC logic and as the last bit of the destination address enters the CRC, the 6 most significant bits of the CRC generator are latched. These 6 bits are then decoded by a 1 of 64 decode to index a unique filter bit (FB0-63) in the multicast address register. If the filter bit selected is set, the multicast packet is accepted. The system designer would use a program to determine which filter bits to set in the multicast registers. For some address found to hash to the value 50 (32H), then FB50 in MAR6 should be initialized to "1" All multicast filter bits that correspond to multicast address accepted by the node are then set to one. To accept all multicast packets all of the registers are set to all ones.

	D7	D6	D5	D4	D3	D2	D1	D0
MAR0	FB7	FB6	FB5	FB4	FB3	FB2	FB1	FB0
MAR1	FB15	FB14	FB13	FB12	FB11	FB10	FB9	FB8
MAR2	FB23	FB22	FB21	FB20	FB19	FB18	FB17	FB16
MAR3	FB31	FB30	FB29	FB28	FB27	FB26	FB25	FB24

Preliminary

MAR4	FB39	FB38	FB37	FB36	FB35	FB34	FB33	FB32
MAR5	FB47	FB46	FB45	FB44	FB43	FB42	FB41	FB40
MAR6	FB55	FB54	FB53	FB52	FB51	FB50	FB49	FB48
MAR7	FB63	FB62	FB61	FB60	FB59	FB58	FB57	FB56

5.12 DMA Registers

LOCAL DMA TRANSMIT REGISTERS

	15 8 | 7 0
(TPSR)	TRANSMIT PAGE START
(TBCR0,1)	TRANSMIT BYTE COUNT

5.13 LOCAL DMA RECEIVE REGISTERS

	15 8 | 7 0
(PSTART)	PAGE START
(PSTOP)	PAGE STOP
(CURR)	CURRENT
(BRNY)	BOUNDARY

	15 8 | 7 0
(CLDA0,1)	CURRENT LOCAL DMA ADDRESS

5.14 REMOTE DMA REGISTERS

	15 8 | 7 0
(RSAR0,1)	START ADDRESS
(RBCR0,1)	BYTE COUNT
(CRDA0,1)	CURRENT REMOTE DMA ADDRESS

5.15 (i) Local DMA Transmit Registers

Transmit page start register (TPSR):

This register points to the assembled packet to be transmitted. Only the eight higher order addresses be specified since all transmit packets are assembled on 256-byte page boundaries.

7	6	5	4	3	2	1	0
A15	A14	A13	A12	A11	A10	A9	A8

Transmit byte count register0, 1 (TBCR0, TBCR1):

These two registers indicate the length of the packet to be transmitted in bytes. The maximum number of transmit bytes allowed is 32k bytes. (4000H – 7FFFH) The TC5299J will not truncate transmissions longer than 1500 bytes.

	7	6	5	4	3	2	1	0
TBCR1	L15	L14	L13	L12	L11	L10	L9	L8

Preliminary

	7	6	5	4	3	2	1	0
TBCR0	L7	L6	L5	L4	L3	L2	L1	L0

5.16 (ii) Local DMA Receive Registers
Page start, stop registers (PSTART, STOP):

The Page Start and Page stop Registers program the starting and stopping page of the Receive Buffer Ring. Since the TC5299J uses fixed 256-byte buffers aligned on page boundaries only the upper eight bits of the start and stop address are specified.

	7	6	5	4	3	2	1	0
PSTART PSTOP	A15	A14	A13	A12	A11	A10	A9	A8

Boundary register (BNRY):

This register is used to prevent overflow of the Receive Buffer Ring. Buffer management compares the contents of this register to the next buffer address when linking buffers together. If the contents of this register match the next buffer address the local DMA operation is aborted.

	7	6	5	4	3	2	1	0
BNRY	A15	A14	A13	A12	A11	A10	A9	A8

5.17 (iii) Remote DMA registers
Remote Start Address Registers (RSAR0, 1):
Remote Byte Count Registers (RBCR0, 1):

Remote DMA operations are programmed via the Remote Start Address (RSAR0, 1) and Remote Byte Count (RBCR0, 1) registers. The Remote Start Address is used to point to the start of the block of data to be transferred and the Remote Byte Count is used to indicate the length of the block (in bytes).

	7	6	5	4	3	2	1	0
RSAR1	A15	A14	A13	A12	A11	A10	A9	A8

	7	6	5	4	3	2	1	0
RSAR0	A7	A6	A5	A4	A3	A2	A1	A0

	7	6	5	4	3	2	1	0
RBCR1	BC15	BC14	BC13	BC12	BC11	BC10	BC9	BC8

	7	6	5	4	3	2	1	0
RBCR0	BC7	BC6	BC5	BC4	BC3	BC2	BC1	BC0

Current Page Register:

This register is used internally by the Buffer Management Logic as a backup register for reception. CURR contains the address of the first buffer to be used for a packet reception and is used to restore DMA pointers in the event of receive errors. This register is initialized to the same value as PSTART and should not be written to again unless the controller is reset.

	7	6	5	4	3	2	1	0
CURR	A15	A14	A13	A12	A11	A10	A9	A8

Preliminary

Current local DMA register 0,1 (CLDA0, 1):

These two registers can be accessed to determine the current Local DMA Address.

	7	6	5	4	3	2	1	0
CLDA1	A15	A14	A13	A12	A11	A10	A9	A8

	7	6	5	4	3	2	1	0
CLDA0	A7	A6	A5	A4	A3	A2	A1	A0

Current Remote DMA Address Registers:

The Current Remote DMA Registers contain the current address of the Remote DMA. The bit assignment is shown as below:

	7	6	5	4	3	2	1	0
CRDA1	A15	A14	A13	A12	A11	A10	A9	A8

	7	6	5	4	3	2	1	0
CRDA0	A7	A6	A5	A4	A3	A2	A1	A0

Preliminary

6 Electrical Specification and Timing

MII :
RECEIVE TIMING

An example transfer a packet from PHY to MAC

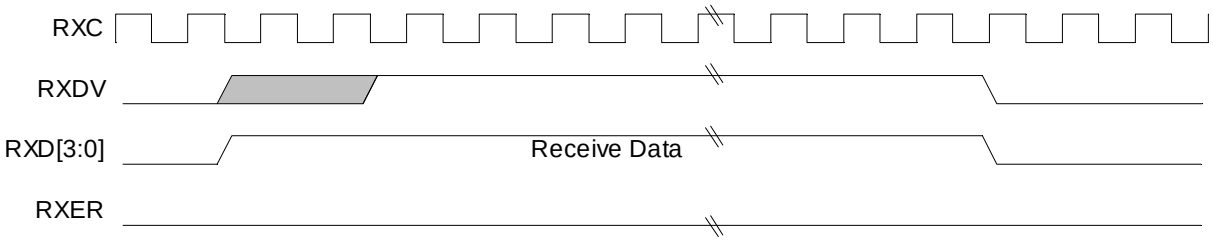

TRANSMIT TIMINGS

An example transfer a packet from MAC to PHY

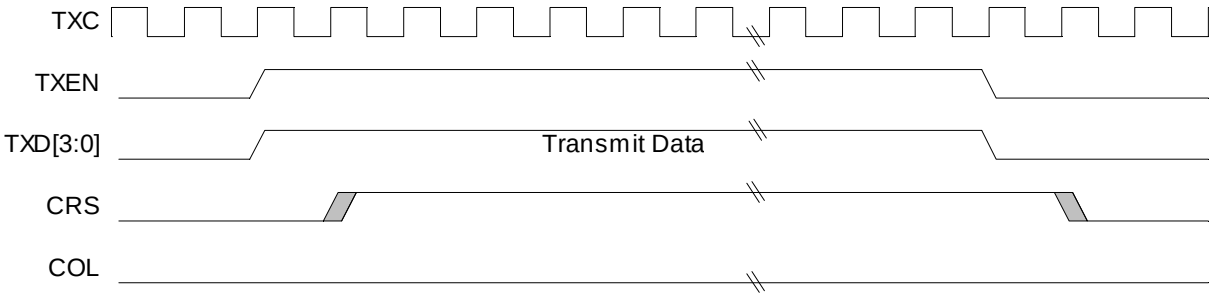

Preliminary

ISA Slave Accesses

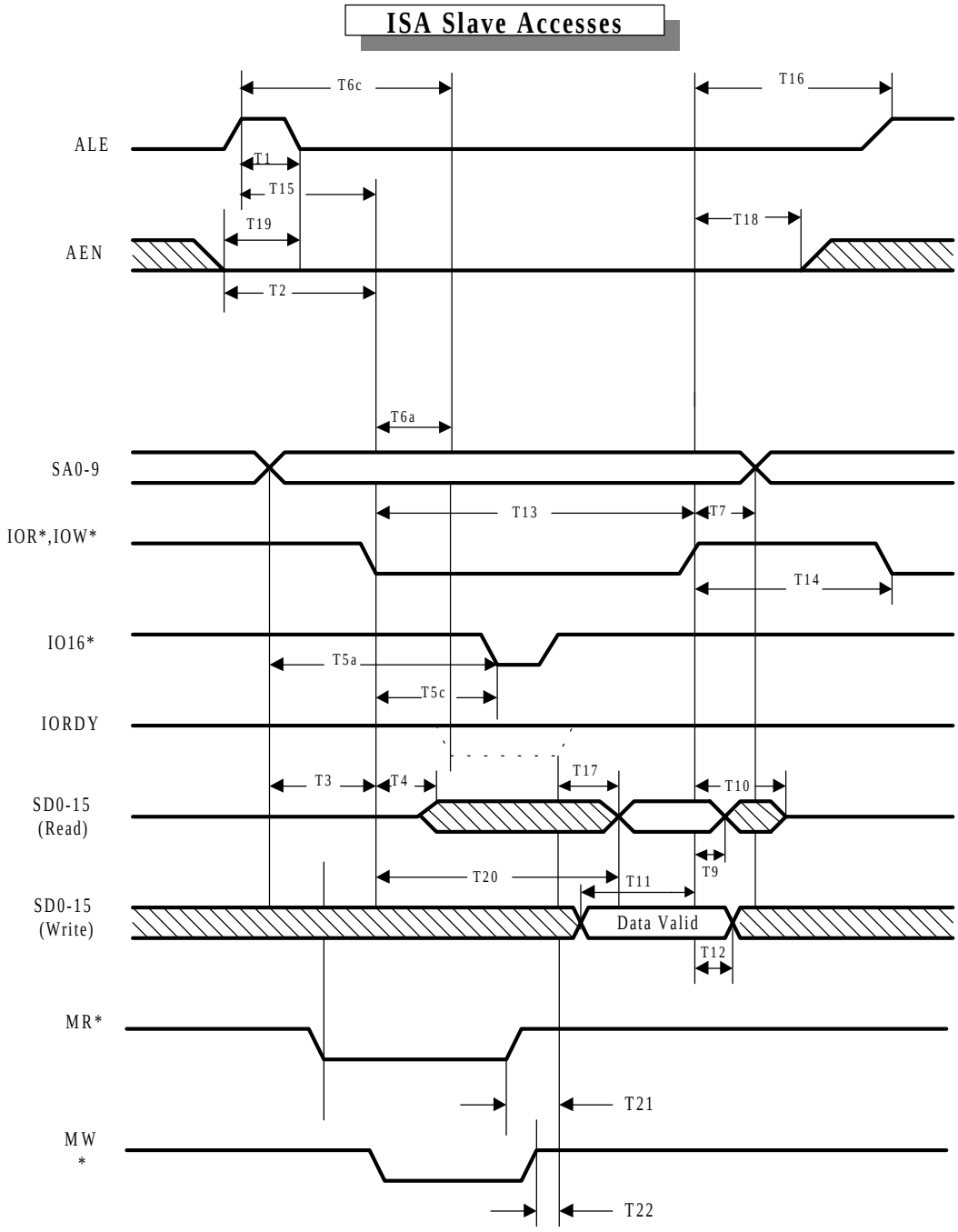

Preliminary

Symbol	Description	8-Bit Transfers		16-Bit Transfers		Units
		Min	Max	Min	Max	
T1	ALE Width (ISA Interface)	20		20		ns
T2	AEN valid before Command Strobe Active	60		60		ns
T3	SA0-9 Valid before IOR* , IOW* Asserted	40		20		ns
T4	IOR*, Asserted to SD0-15 Driven	0		0		ns
T5a	SA0-9 Valid before IO16* Valid				60	ns
T5c	SA0-9 Valid and IOR* or IOW* Active before IO16* Valid				50	ns
T6a	IOR*, IOW* Asserted to IORDY Deasserted		100		50	ns
T6c	ALE Asserted and SA0-9 Valid to IORDY Deasserted		60		60	ns
T7	IOR*, IOW* Deasserted before SA0-9 Invalid	15		15		ns
T9	IOR*, Deasserted to SD0-15 Read Data Invalid	0		0		ns
T10	IOR*, Deasserted to SD0-15 Floating		45		45	ns
T11	SD0-15 Write Data Valid to IOW* Deasserted	60		20		ns
T12	IOW*, Deasserted to SD0-15 Write Data Invalid	20		20		ns
T13	IOR*, IOW* Active Width	300		140		ns
T14	IOR*, IOW* Inactive Width	85		85		ns
T15	ALE Asserted before IOR*, IOW* Asserted			25		ns
T16	IOR*, IOW* Negated before Next ALE Asserted			20		ns
T17	IORDY Asserted to SD0-15 I/O Read Data Valid		60		60	ns
T18	IOR*, IOW* Deasserted before AEN Invalid	25		25		ns
T19	AEN Valid before ALE Deasserted	50		50		ns
T20	IOR* Asserted to SD0-15 Read Data Valid		150		90	ns
T21	IORDY Invalid after MR* Deasserted				30	ns
T22	IORDY Invalid after MW* Deasserted				20	ns

Preliminary

7 Physical Dimension

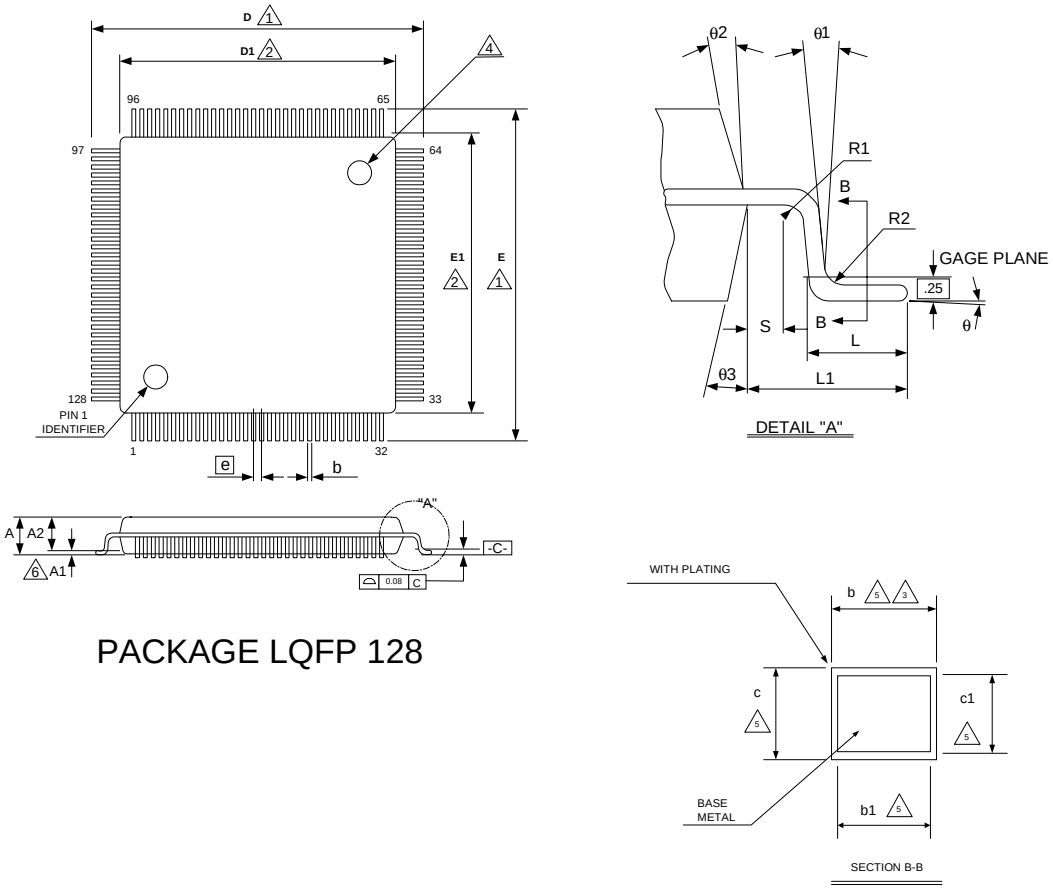

PACKAGE LQFP 128

Symbol	Dimension in mm			Dimension in inch		
	Min	Nom	Max	Min	Nom	Max
A	------	------	1.60	------	------	0.063
A1	0.05	------	------	0.002	------	------
A2	1.35	1.40	1.45	0.053	0.055	0.057
b	0.13	0.18	0.23	0.005	0.007	0.009
b1	0.13	0.16	0.19	0.005	0.006	0.007
c	0.09	------	0.20	0.004	------	0.008
c1	0.09	------	0.16	0.004	------	0.006
D	15.85	16.00	16.15	0.624	0.630	0.636
D1	13.90	14.00	14.10	0.547	0.551	0.555
E	15.85	16.00	16.15	0.624	0.630	0.636
E1	13.90	14.00	14.10	0.547	0.551	0.555
e	0.40 BSC			0.016 BSC		
L	0.45	0.60	0.75	0.018	0.024	0.030
L1	1.00 REF			0.039 REF		
R1	0.08	------	------	0.003	------	------
R2	0.08	------	0.20	0.003	------	0.008
S	0.20	------	------	0.008	------	-----
θ	0 °	3 .5 °	7 °	0 °	3 .5 °	7 °
θ1	0 °	------	------	0 °	------	------
θ 2	12° TYP			12° TYP		
θ 3	12° TYP			12 ° TYP		

Preliminary

Notice

This document contains information on product, which is in the development phase. TMI reserves the rights to change specifications, features, functions and availability of the product without notice.
TMI devices are NOT designed, intended, authorized, or warranted to be suitable for use in Life-Supporting applications.

Preliminary