TC52

Dual Channel Voltage Detector

Features

- Two Independent Voltage Detectors in One Package
- Highly Accurate: ±2%
- Low Power Consumption: 2.0µA, Typ.
- Detect Voltage Range: 1.5V to 5.0V
- Operating Voltage: 1.5V to 10.0V
- Output Configuration: N-Channel Open-Drain
- Space-Saving 5-Pin SOT-23A Package

Typical Applications

- Battery Life Monitors and Recharge Voltage Monitors
- Memory Battery Backup Circuitry
- Power-On Reset Circuits
- Power Failure Detection
- Delay Circuitry

Device Selection Table

Part Number	Package	Temp. Range
TC52-xxxxxxxxx	5-Pin SOT-23A	-40°C to +85°C

Other output voltages are available. Please contact Microchip Technology Inc. for details.

Package Type

5-Pin SOT-23A

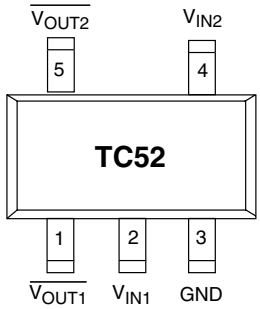

General Description

The TC52 consists of two independent low power voltage detectors in a space-saving 5-pin SOT-23A package. Typical supply current consumption is only 2µA at an input voltage of 2V. The voltage detection threshold settings are factory-programmed and guaranteed to ±2% accuracy. Threshold settings over a range of 1.5V to 5.0V are available. The TC52 is available with open drain (NMOS) configurations. Small size, high precision, low supply current, and low installed cost makes the TC52 the ideal voltage detector for a wide variety of voltage monitoring applications.

Functional Block Diagram

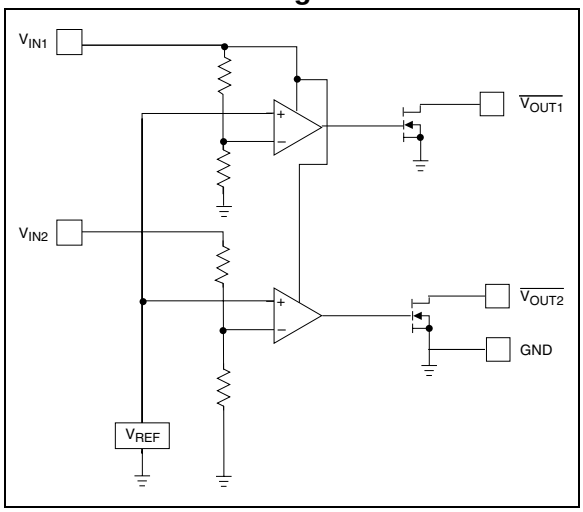

© 2002 Microchip Technology Inc.

1.0 ELECTRICAL CHARACTERISTICS

Absolute Maximum Ratings*

Input Voltage .....+12V
Output Current 50mA
Output Voltage.....V_{IN} + 0.3V to V_{SS} – 0.3V
Power Dissipation
5-Pin SOT-23A 100mW
Operating Temperature Range.....-40°C to +85°C
Storage Temperature Range.....-40°C to +125°C

*Stresses above those listed under "Absolute Maximum Ratings" may cause permanent damage to the device. These are stress ratings only and functional operation of the device at these or any other conditions above those indicated in the operation sections of the specifications is not implied. Exposure to Absolute Maximum Rating conditions for extended periods may affect device reliability.

TC52 ELECTRICAL SPECIFICATIONS

Electrical Characteristics: T_A = 25°C, unless otherwise specified. Note 1.

Symbol	Parameter	Min	Typ	Max	Units	Test Conditions
V_{IN}	Operating Voltage	1.5	—	10.0	V	V_{DF} (T) = 1.5 to 5.0V
I_{SS}	Supply Current	— — — — —	1.35 1.50 1.95 2.40 3.00	3.90 4.50 5.10 5.70 6.30	µA	V_{IN1} = 1.5V V_{IN1} = 2.0V V_{IN1} = 3.0V V_{IN1} = 4.0V V_{IN1} = 5.0V
I_{IN2}	Input Current V_{IN2}	— — — — —	0.45 0.50 0.65 0.80 1.00	1.30 1.50 1.70 1.90 2.10	µA	V_{IN1} = 1.5V V_{IN1} = 2.0V V_{IN1} = 3.0V V_{IN1} = 4.0V V_{IN1} = 5.0V
V_{DET1} -	Channel 1 Detect Voltage	V_{T1} x 0.98	V_{T1} ±0.5%	V_{T1} x 1.02	V	Note 2
V_{DET2} -	Channel 2 Detect Voltage	V_{T2} x 0.98	V_{T2} ±0.5%	V_{T2} x 1.02	V	Note 2
V_{HYS1}	Hysteresis Range 1	V_{DET1} - x 0.02	V_{DET1} - x 0.05	V_{DET1} - x 0.08	V	
V_{HYS2}	Hysteresis Range 2	V_{DET2} - x 0.02	V_{DET2} - x 0.05	V_{DET2} - x 0.08	V	
I_{OUT}	Output Current	0.3 3.0 5.0 6.0 7.0	2.2 7.7 10.1 11.5 13.0	— — — — —	mA	V_{OL} = 0.5V, V_{IN1} = 1.0V V_{IN1} = 2.0V V_{IN1} = 3.0V V_{IN1} = 4.0V V_{IN1} = 5.0V
ΔV_{DET} -/ (ΔT_{OPR} V_{DET} -)	Temperature Characteristics	—	±100	—	ppm/°C	-40°C ≤ T_{OPR} ≤ 85°C
t_{DLY}	Detection Time	—	—	0.2	msec	Time from V_{IN} = V_{DET} - to V_{OUT} = V_{OL}

Note 1: Additional resistance between the V_{IN1} pin and the supply voltage may alter the electrical characteristics.
2: V_{T1}, V_{T2} are the factory-programmed voltage detection thresholds.

© 2002 Microchip Technology Inc.

2.0 PIN DESCRIPTIONS

The descriptions of the pins are listed in Table 2-1.

TABLE 2-1: PIN FUNCTION TABLE

Pin No. (5-Pin SOT-23A)	Symbol	Description
1	V_{OUT1}	Detector #1 output.
2	V_{IN}	Supply voltage input, detect voltage 1.
3	GND	Ground terminal.
4	V_{IN2}	Detect voltage 2.
5	V_{OUT2}	Detector #2 output.

3.0 DETAILED DESCRIPTION

In normal steady-state operation and for either channel, when $V_{IN} > V_{DET}-$, the output is high, see Figure 3-1. (In the case of the TC52N, this is an open-drain condition.) If and when the input falls below $V_{DET}-$, the output pulls down (Logic 0) to V_{SS}. Generally, V_{OUT} can pull down to within 0.5V of V_{SS} at rated output current and input voltages. (Also see Section 1.0, Electrical Characteristics).

The output, V_{OUT}, stays valid until the input voltage falls below the minimum operating voltage, V_{INMIN}, of 0.7V. Below this minimum operating voltage, the output is undefined. During power-up or anytime V_{IN} has fallen below V_{INMIN}, V_{OUT} will remain undefined until V_{IN} rises above V_{INMIN}, at which time the output becomes valid. V_{OUT} is maintained in its active low state while $V_{INMIN} < V_{IN} < V_{DET}+$. ($V_{DET}+ = V_{DET}- + V_{HYST}$). If and when the input rises above $V_{DET}+$, the output will assume its inactive state (open-drain for TC52N).

FIGURE 3-1: TIMING DIAGRAM

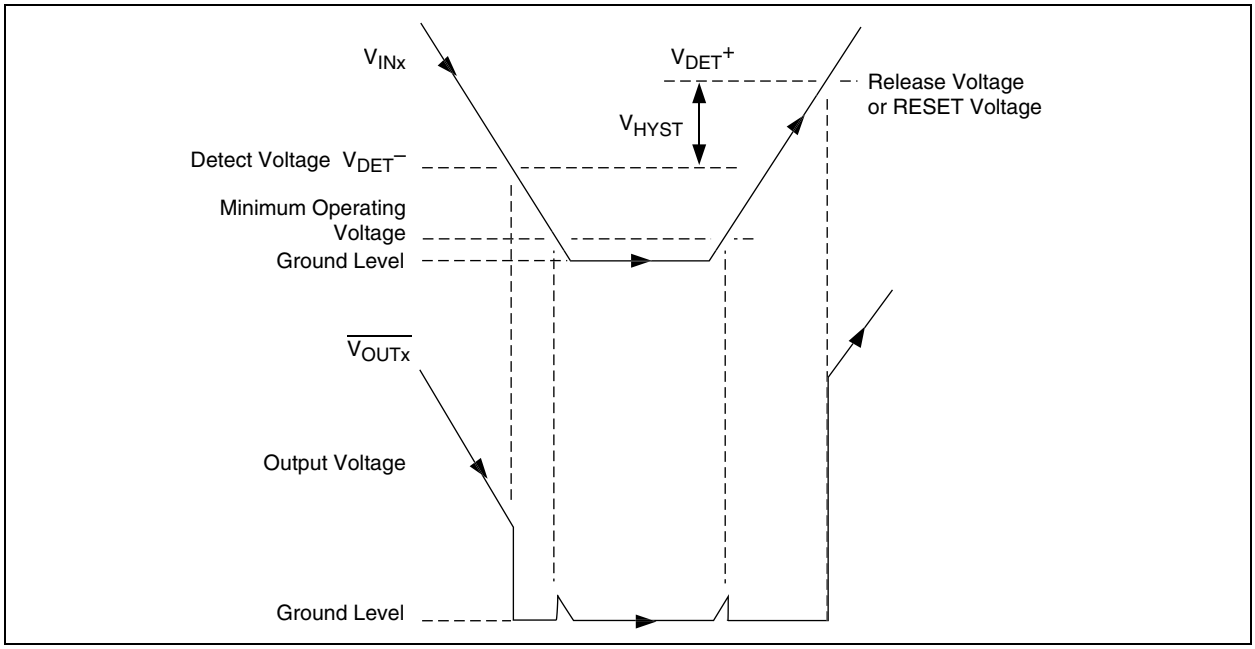

4.0 APPLICATIONS INFORMATION

Pin 2 (V_{IN1}) acts as both the input to Voltage Detector #1, as well as the power supply input for the chip. As such, always assign V_{IN1} to monitor voltages between 1.5V and 10V. Failure to do this will result in unreliable detector operation due to an out-of-tolerance supply voltage. In high noise environments, it may be necessary to install a small input bypass capacitor (0.01µF to 0.1µF) from V_{IN1} to ground to minimize on-chip power supply noise.

4.1 Battery and Main Supply Monitor

The circuit shown in Figure 4-1 provides both a processor supply monitor/reset function, as well as a low battery detect function. As shown, the TC52N3330ECT (N-Channel outputs) uses Detector 2 to monitor the system power supply rail. When the power supply is 10% below its nominal output voltage rating, the V_{OUT2} output is driven and held low. When the power supply voltage is above 3.0V nominal, V_{OUT2} is driven to an open circuit and the combination of R_1 and C_1 provides a reset time out delay. Detector 1 monitors the voltage on the main supply battery. A low battery condition is indicated when the battery voltage falls to 3.3V, at which time the main processor is interrupted to initiate a warning or system shutdown.

FIGURE 4-1: SUPPLY MONITOR AND PROCESSOR SUPERVISOR

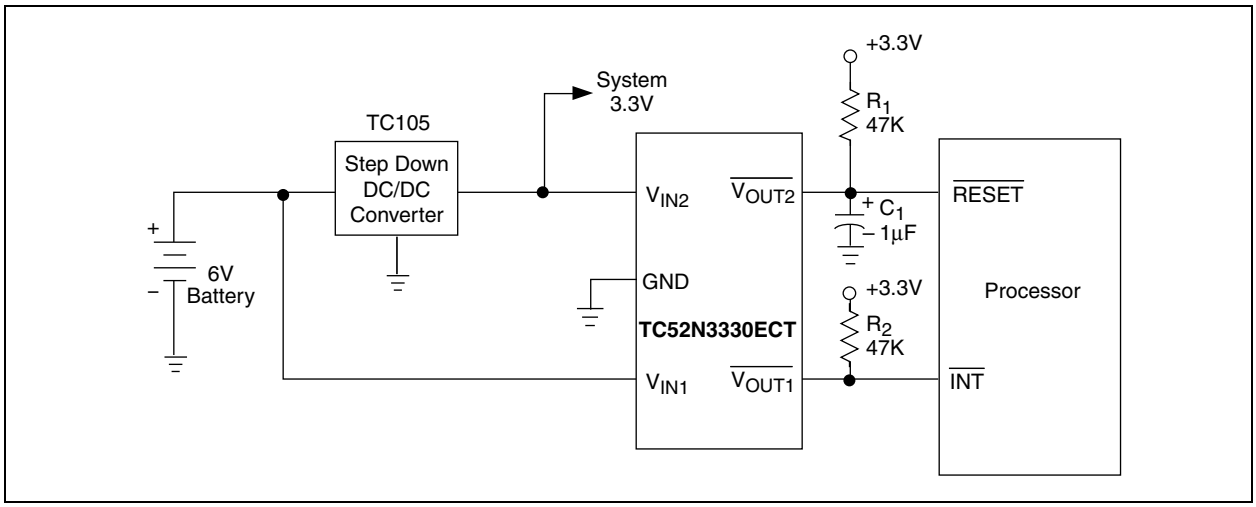

© 2002 Microchip Technology Inc.

5.0 PACKAGING INFORMATION

5.1 Package Marking Information

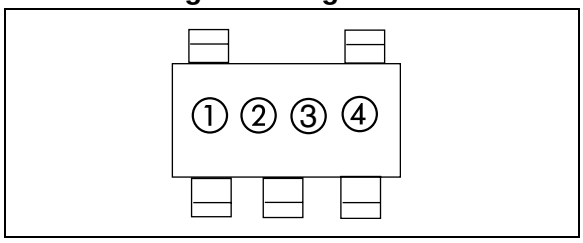

① represents N-channel indication and integer part of output voltage

Symbol	Output
C	CMOS
N	Nch

② ③ represents registration serial number

Symbol	Detect Voltage 1	Detect Voltage 2
0P	4.5	2.7

Note: Symbols for other custom voltages set prior to shipment.

④ represents assembly lot code

5.2 Taping Form

Component Taping Orientation for 5-Pin SOT-23A (EIAJ SC-74A) Devices

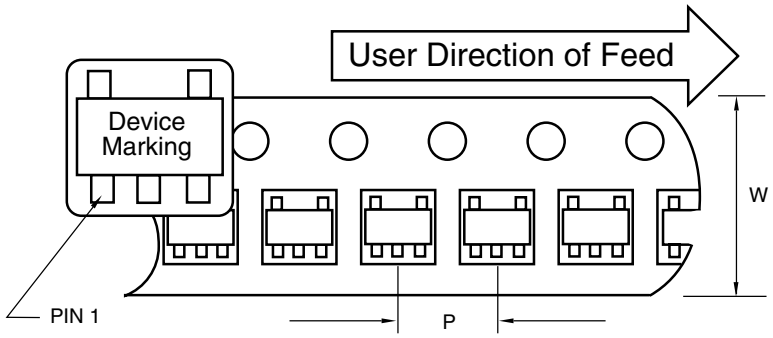

Standard Reel Component Orientation
TR Suffix Device
(Mark Right Side Up)

Carrier Tape, Number of Components Per Reel and Reel Size

Package	Carrier Width (W)	Pitch (P)	Part Per Full Reel	Reel Size
5-Pin SOT-23A	8 mm	4 mm	3000	7 in

5.3 Package Dimensions

SOT-23A-5

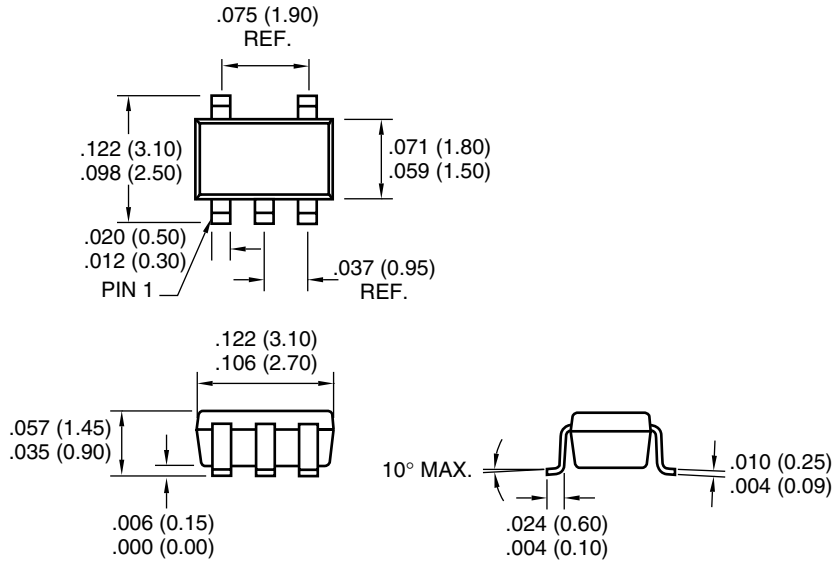

Dimensions: inches (mm)

© 2002 Microchip Technology Inc.

PRODUCT IDENTIFICATION SYSTEM

To order or obtain information, e.g., on pricing or delivery, refer to the factory or the listed sales office.

PART CODE	TC52	N	45	27	E	CT	XX

Output Configuration:
N = Open Drain

Detected Voltage 1*:
Ex: 45 = 4.5V

Detected Voltage 2*:
Ex: 27 = 2.7V

Temperature:
E: -40°C to +85°C

Package Type and Pin Count:
CT: 5-Pin SOT-23A

Taping Direction:
TR: Standard Taping

*Other voltages are available. Please contact Microchip Technology Inc. for details.

Sales and Support

Data Sheets
Products supported by a preliminary Data Sheet may have an errata sheet describing minor operational differences and recommended workarounds. To determine if an errata sheet exists for a particular device, please contact one of the following:

1. Your local Microchip sales office
2. The Microchip Corporate Literature Center U.S. FAX: (480) 792-7277
3. The Microchip Worldwide Site (www.microchip.com)

Please specify which device, revision of silicon and Data Sheet (include Literature #) you are using.

New Customer Notification System
Register on our web site (www.microchip.com/cn) to receive the most current information on our products.

© 2002 Microchip Technology Inc.

NOTES:

© 2002 Microchip Technology Inc.

Information contained in this publication regarding device applications and the like is intended through suggestion only and may be superseded by updates. It is your responsibility to ensure that your application meets with your specifications. No representation or warranty is given and no liability is assumed by Microchip Technology Incorporated with respect to the accuracy or use of such information, or infringement of patents or other intellectual property rights arising from such use or otherwise. Use of Microchip's products as critical components in life support systems is not authorized except with express written approval by Microchip. No licenses are conveyed, implicitly or otherwise, under any intellectual property rights.

Trademarks

The Microchip name and logo, the Microchip logo, FilterLab, KEELOQ, microID, MPLAB, PIC, PICmicro, PICMASTER, PICSTART, PRO MATE, SEEVAL and The Embedded Control Solutions Company are registered trademarks of Microchip Technology Incorporated in the U.S.A. and other countries.

dsPIC, ECONOMONITOR, FanSense, FlexROM, fuzzyLAB, In-Circuit Serial Programming, ICSP, ICEPIC, microPort, Migratable Memory, MPASM, MPLIB, MPLINK, MPSIM, MXDEV, MXLAB, PICC, PICDEM, PICDEM.net, rfPIC, Select Mode and Total Endurance are trademarks of Microchip Technology Incorporated in the U.S.A.

Serialized Quick Turn Programming (SQTP) is a service mark of Microchip Technology Incorporated in the U.S.A.

All other trademarks mentioned herein are property of their respective companies.

© 2002, Microchip Technology Incorporated, Printed in the U.S.A., All Rights Reserved.

Printed on recycled paper.

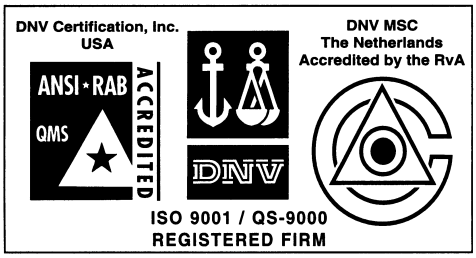

Microchip received QS-9000 quality system certification for its worldwide headquarters, design and wafer fabrication facilities in Chandler and Tempe, Arizona in July 1999 and Mountain View, California in March 2002. The Company's quality system processes and procedures are QS-9000 compliant for its PICmicro® 8-bit MCUs, KEELOQ® code hopping devices, Serial EEPROMs, microperipherals, non-volatile memory and analog products. In addition, Microchip's quality system for the design and manufacture of development systems is ISO 9001 certified.

WORLDWIDE SALES AND SERVICE

AMERICAS

Corporate Office
2355 West Chandler Blvd.
Chandler, AZ 85224-6199
Tel: 480-792-7200 Fax: 480-792-7277
Technical Support: 480-792-7627
Web Address: http://www.microchip.com

Rocky Mountain
2355 West Chandler Blvd.
Chandler, AZ 85224-6199
Tel: 480-792-7966 Fax: 480-792-7456

Atlanta
500 Sugar Mill Road, Suite 200B
Atlanta, GA 30350
Tel: 770-640-0034 Fax: 770-640-0307

Boston
2 Lan Drive, Suite 120
Westford, MA 01886
Tel: 978-692-3848 Fax: 978-692-3821

Chicago
333 Pierce Road, Suite 180
Itasca, IL 60143
Tel: 630-285-0071 Fax: 630-285-0075

Dallas
4570 Westgrove Drive, Suite 160
Addison, TX 75001
Tel: 972-818-7423 Fax: 972-818-2924

Detroit
Tri-Atria Office Building
32255 Northwestern Highway, Suite 190
Farmington Hills, MI 48334
Tel: 248-538-2250 Fax: 248-538-2260

Kokomo
2767 S. Albright Road
Kokomo, Indiana 46902
Tel: 765-864-8360 Fax: 765-864-8387

Los Angeles
18201 Von Karman, Suite 1090
Irvine, CA 92612
Tel: 949-263-1888 Fax: 949-263-1338

New York
150 Motor Parkway, Suite 202
Hauppauge, NY 11788
Tel: 631-273-5305 Fax: 631-273-5335

San Jose
Microchip Technology Inc.
2107 North First Street, Suite 590
San Jose, CA 95131
Tel: 408-436-7950 Fax: 408-436-7955

Toronto
6285 Northam Drive, Suite 108
Mississauga, Ontario L4V 1X5, Canada
Tel: 905-673-0699 Fax: 905-673-6509

ASIA/PACIFIC

Australia
Microchip Technology Australia Pty Ltd
Suite 22, 41 Rawson Street
Epping 2121, NSW
Australia
Tel: 61-2-9868-6733 Fax: 61-2-9868-6755

China - Beijing
Microchip Technology Consulting (Shanghai) Co., Ltd., Beijing Liaison Office
Unit 915
Bei Hai Wan Tai Bldg.
No. 6 Chaoyangmen Beidajie
Beijing, 100027, No. China
Tel: 86-10-85282100 Fax: 86-10-85282104

China - Chengdu
Microchip Technology Consulting (Shanghai) Co., Ltd., Chengdu Liaison Office
Rm. 2401, 24th Floor,
Ming Xing Financial Tower
No. 88 TIDU Street
Chengdu 610016, China
Tel: 86-28-86766200 Fax: 86-28-86766599

China - Fuzhou
Microchip Technology Consulting (Shanghai) Co., Ltd., Fuzhou Liaison Office
Unit 28F, World Trade Plaza
No. 71 Wusi Road
Fuzhou 350001, China
Tel: 86-591-7503506 Fax: 86-591-7503521

China - Shanghai
Microchip Technology Consulting (Shanghai) Co., Ltd.
Room 701, Bldg. B
Far East International Plaza
No. 317 Xian Xia Road
Shanghai, 200051
Tel: 86-21-6275-5700 Fax: 86-21-6275-5060

China - Shenzhen
Microchip Technology Consulting (Shanghai) Co., Ltd., Shenzhen Liaison Office
Rm. 1315, 13/F, Shenzhen Kerry Centre,
Renminnan Lu
Shenzhen 518001, China
Tel: 86-755-2350361 Fax: 86-755-2366086

China - Hong Kong SAR
Microchip Technology Hongkong Ltd.
Unit 901-6, Tower 2, Metroplaza
223 Hing Fong Road
Kwai Fong, N.T., Hong Kong
Tel: 852-2401-1200 Fax: 852-2401-3431

India
Microchip Technology Inc.
India Liaison Office
Divyasree Chambers
1 Floor, Wing A (A3/A4)
No. 11, O'Shaugnessey Road
Bangalore, 560 025, India
Tel: 91-80-2290061 Fax: 91-80-2290062

Japan
Microchip Technology Japan K.K.
Benex S-1 6F
3-18-20, Shinyokohama
Kohoku-Ku, Yokohama-shi
Kanagawa, 222-0033, Japan
Tel: 81-45-471- 6166 Fax: 81-45-471-6122

Korea
Microchip Technology Korea
168-1, Youngbo Bldg. 3 Floor
Samsung-Dong, Kangnam-Ku
Seoul, Korea 135-882
Tel: 82-2-554-7200 Fax: 82-2-558-5934

Singapore
Microchip Technology Singapore Pte Ltd.
200 Middle Road
#07-02 Prime Centre
Singapore, 188980
Tel: 65-6334-8870 Fax: 65-6334-8850

Taiwan
Microchip Technology Taiwan
11F-3, No. 207
Tung Hua North Road
Taipei, 105, Taiwan
Tel: 886-2-2717-7175 Fax: 886-2-2545-0139

EUROPE

Denmark
Microchip Technology Nordic ApS
Regus Business Centre
Lautrup hoj 1-3
Ballerup DK-2750 Denmark
Tel: 45 4420 9895 Fax: 45 4420 9910

France
Microchip Technology SARL
Parc d'Activite du Moulin de Massy
43 Rue du Saule Trapu
Batiment A - ler Etage
91300 Massy, France
Tel: 33-1-69-53-63-20 Fax: 33-1-69-30-90-79

Germany
Microchip Technology GmbH
Gustav-Heinemann Ring 125
D-81739 Munich, Germany
Tel: 49-89-627-144 0 Fax: 49-89-627-144-44

Italy
Microchip Technology SRL
Centro Direzionale Colleoni
Palazzo Taurus 1 V. Le Colleoni 1
20041 Agrate Brianza
Milan, Italy
Tel: 39-039-65791-1 Fax: 39-039-6899883

United Kingdom
Microchip Ltd.
505 Eskdale Road
Winnersh Triangle
Wokingham
Berkshire, England RG41 5TU
Tel: 44 118 921 5869 Fax: 44-118 921-5820

05/01/02

© 2002 Microchip Technology Inc.