RoHS

Low Loss High Current Toroid Choke TC210LL

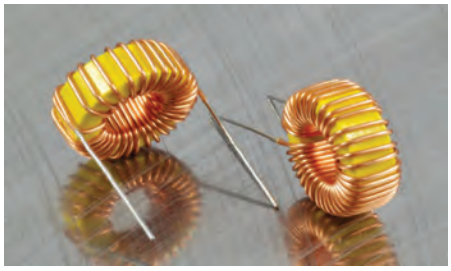

Dimensions: Inches / (mm)

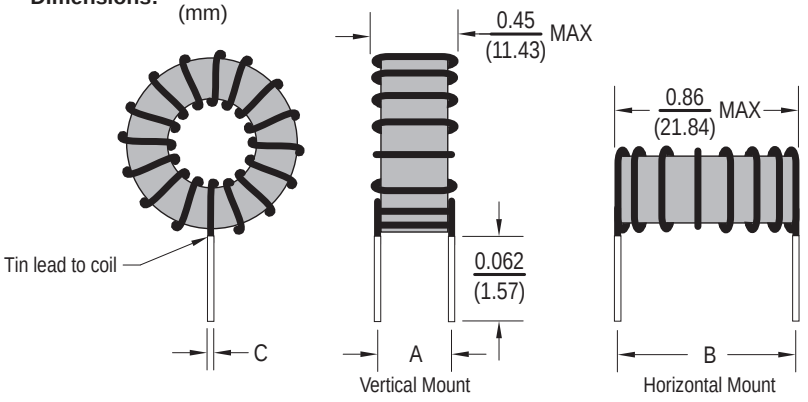

Allied Part Number	Inductance (µH) @ 1KHZ	Tolerance (%)	L(µH) @ I rated	IDC (A)	DCR (Ω) MAX	DIM A (Nom)	DIM B (Nom)	DIM C (Nom)
( )TC210LL-1R0L-RC	1.0	20	0.8	21.4	.002	.37	.80	.053
( )TC210LL-1R5L-RC	1.5	20	1.1	18.5	.002	.37	.80	.053
( )TC210LL-2R2L-RC	2.2	20	1.5	16.5	.003	.37	.80	.053
( )TC210LL-3R3L-RC	3.3	20	2.1	15.1	.003	.37	.80	.053
( )TC210LL-4R7L-RC	4.7	20	2.9	14.0	.003	.37	.80	.053
( )TC210LL-5R6L-RC	5.6	20	3.3	13.1	.004	.37	.80	.053
( )TC210LL-6R8L-RC	6.8	20	3.9	12.3	.004	.37	.80	.053
( )TC210LL-8R2L-RC	8.2	20	4.5	11.7	.005	.37	.80	.053
( )TC210LL-100L-RC	10	15	5.2	9.9	.005	.37	.80	.053
( )TC210LL-120L-RC	12	15	6.1	9.6	.006	.37	.80	.053
( )TC210LL-150L-RC	15	15	7.3	9.1	.006	.37	.80	.053
( )TC210LL-180L-RC	18	15	8.5	8.6	.007	.37	.80	.053
( )TC210LL-220L-RC	22	15	11.8	6.7	.012	.35	.78	.042
( )TC210LL-270L-RC	27	15	14.2	6.4	.012	.35	.78	.042
( )TC210LL-330L-RC	33	15	16.6	6.1	.014	.35	.78	.042
( )TC210LL-390L-RC	39	15	18.8	5.9	.015	.35	.78	.042
( )TC210LL-470L-RC	47	15	25.3	5.6	.024	.33	.76	.034
( )TC210LL-560L-RC	56	15	29.3	5.3	.026	.33	.76	.034
( )TC210LL-680L-RC	68	15	34.0	5.1	.030	.40	.76	.034
( )TC210LL-820L-RC	82	15	39.9	4.6	.032	.40	.76	.034
( )TC210LL-101L-RC	100	15	46.2	4.3	.036	.40	.76	.034
( )TC210LL-121L-RC	120	15	53.5	4.1	.039	.40	.76	.034
( )TC210LL-151L-RC	150	15	63.8	3.6	.043	.40	.76	.034
( )TC210LL-181L-RC	180	15	73.3	3.7	.048	.40	.76	.034
( )TC210LL-221L-RC	220	15	85.1	3.5	.053	.40	.76	.034
( )TC210LL-271L-RC	270	15	124.2	2.7	.093	.37	.74	.027
( )TC210LL-331L-RC	330	15	145.1	2.5	.103	.37	.74	.027
( )TC210LL-391L-RC	390	15	165.4	2.4	.112	.37	.74	.027
( )TC210LL-471L-RC	470	15	190.1	2.3	.124	.38	.76	.027
( )TC210LL-561L-RC	560	15	217.9	2.2	.134	.38	.76	.027
( )TC210LL-680L-RC	680	15	251.9	2.1	.147	.38	.76	.027
( )TC210LL-821L-RC	820	15	361.6	1.6	.257	.37	.75	.022
( )TC210LL-102L-RC	1000	15	421.5	1.5	.284	.37	.75	.022

Please specify Vertical or Horizontal Mount by placing a V or H at the beginning of the part number, i.e. VTC210LL-100L (Vertical Mount). All specifications subject to change without notice.

Features

- Low Core Loss Series
- Low Magnetic Radiation
- High current capacity up to 21.4A
- Available in Horizontal or Vertical configuration

Electrical

Inductance Range: 1.0µh to 1000µh
Additional values available

Tolerance: 1.0uH~8.2uH @ 20%, 10uH~1000uH @15%

Test Frequency: 1KHz

Operating Temp: -55ºC ~ +125ºC

Temp Rise: ΔT=30ºC Typical at rated IDC

Test Equipment

(L): 100 LCR meter or equivalent

DCR: Chen Hwa 502

Physical

Packaging: Bulk

Marking: None