RoHS

Toroidal Chokes TC210

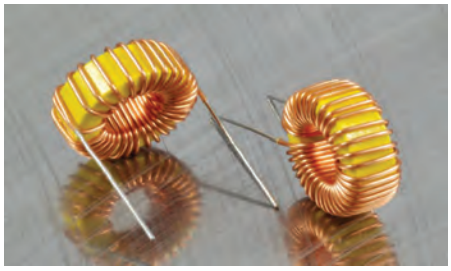

Dimensions: Inches / (mm)

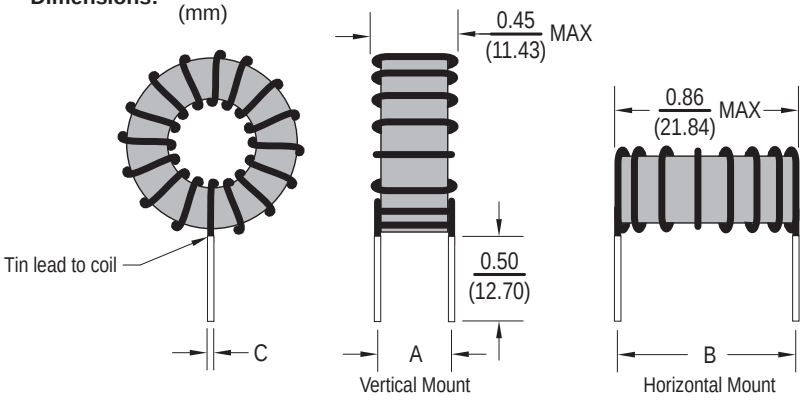

Allied Part Number	Inductance (µH) @ 1KHZ	Tolerance (%)	L(µH) @ I rated	IDC (A)	DCR (Ω) MAX	DIM A (Nom)	DIM B (Nom)	DIM C (Nom)
( )TC210-100L-RC	10	15	6.3	10.8	.006	.34	.77	.053
( )TC210-120L-RC	12	15	7.4	10.3	.007	.34	.77	.053
( )TC210-150L-RC	15	15	10.2	7.7	.012	.33	.76	.042
( )TC210-180L-RC	18	15	11.9	7.4	.013	.33	.76	.042
( )TC210-220L-RC	22	15	14.2	7.0	.015	.33	.76	.042
( )TC210-270L-RC	27	15	19.1	5.3	.026	.32	.75	.034
( )TC210-330L-RC	33	15	22.8	5.0	.029	.32	.75	.034
( )TC210-390L-RC	39	15	26.4	4.8	.032	.32	.75	.034
( )TC210-470L-RC	47	15	34.7	3.6	.055	.31	.75	.027
( )TC210-560L-RC	56	15	40.6	3.4	.060	.31	.75	.027
( )TC210-680L-RC	68	15	48.3	3.3	.067	.31	.75	.027
( )TC210-101L-RC	100	15	75.2	2.4	.130	.31	.74	.022
( )TC210-121L-RC	121	15	88.5	2.2	.150	.31	.74	.022
( )TC210-151L-RC	150	15	84.3	3.4	.062	.35	.79	.034
( )TC210-181L-RC	180	15	113.1	2.6	.110	.34	.77	.027
( )TC210-221L-RC	220	15	134.4	2.4	.120	.34	.77	.027
( )TC210-271L-RC	270	15	181.6	1.8	.210	.33	.76	.022
( )TC210-331L-RC	330	15	216.3	1.7	.230	.33	.76	.022
( )TC210-391L-RC	390	15	250.1	1.7	.250	.33	.76	.022
( )TC210-471L-RC	470	15	293.8	1.6	.280	.35	.76	.022
( )TC210-561L-RC	560	15	341.5	1.5	.300	.35	.79	.022
( )TC210-681L-RC	680	15	403.2	1.4	.330	.35	.79	.022
( )TC210-821L-RC	820	15	472.8	1.4	.370	.35	.79	.022
( )TC210-102L-RC	1000	15	559.2	1.3	.400	.37	.81	.022

Please specify Vertical or Horizontal Mount by placing a V or H at the beginning of the part number, i.e. VTC210-100L (Vertical Mount). All specifications subject to change without notice.

Features

- Low Magnetic Radiation
- Low Core Loss
- High current capacity up to 10A
- Available in Horizontal or Vertical configuration
- Optional Tape Cover
- Cross to Miller / Bourns 2100

Electrical

Inductance Range: 10µh to 1000µh
Additional values available
Tolerance: 15% over entire range
Test Frequency: 1KHz
Operating Temp: -55ºC ~ +105ºC
Temp Rise: Δ T=30ºC Typical at rated IDC
Part temperature should not exceed 125ºC including temperature rise.

Test Equipment

(L): 100 LCR meter or equivalent
DCR: Chen Hwa 502

Physical

Packaging: Bulk
Marking: None