Low Noise and Medium Power GaAs FETs

FEATURES

- Low Noise Figure: NF = 0.8 dB Typical at 12 GHz
- High Associated Gain: Ga = 11 dB Typical at 12 GHz
- High Dynamic Range: 1 dB Compression Power P_{-1} = 24.5 dBm at 12 GHz
- Breakdown Voltage: $BV_{DGO} \geq 9$ V
- Lg = 0.25 µm, Wg = 600 µm
- All-Gold Metallization for High Reliability
- Tight Vp ranges control
- High RF input power handling capability
- 100 % DC Tested

PHOTO ENLARGEMENT

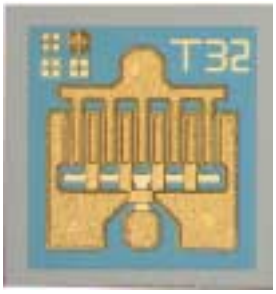

DESCRIPTION

The TC1304 is a GaAs Pseudomorphic High Electron Mobility Transistor (PHEMT) chip, which has very low noise figure, high associated gain and high dynamic range. The device can be used in circuits up to 30 GHz and suitable for low noise and medium power amplifier applications including a wide range of commercial and military applications. All devices are 100% DC tested to assure consistent quality. All bond pads are gold plated for either thermo-compression or thermo-sonic wire bonding.

ELECTRICAL SPECIFICATIONS (T_A=25 °C)

Symbol	Conditions	MIN	TYP	MAX	UNIT
NF	Noise Figure at V_{DS} = 4 V, I_{DS} = 50 mA, f = 12GHz		0.8	1.0	dB
G_a	Associated Gain at V_{DS} = 4 V, I_{DS} = 50 mA, f = 12GHz	10	11		dB
P_{1dB}	Output Power at 1dB Gain Compression Point, f = 12GHz, V_{DS} = 6 V, I_{DS}= 80 mA	23.5	24.5		dBm
G_L	Linear Power Gain, f = 12GHz, V_{DS} = 6 V, I_{DS}= 80 mA	9	10		dB
I_{DSS}	Saturated Drain-Source Current at V_{DS} = 2 V, V_{GS} = 0 V		180		mA
g_m	Transconductance at V_{DS} = 2 V, V_{GS} = 0 V		200		mS
V_P	Pinch-off Voltage at V_{DS} = 2 V, I_D = 1.2 mA		-1.0*		Volts
BV_{DGO}	Drain-Gate Breakdown Voltage at I_{DGO} = 0.3 mA	9	12		Volts
R_{th}	Thermal Resistance		60		°C/W

Note: * For the tight control of the pinch-off voltage . TC1304's are divided into 3 groups:
(1) **TC1304P0710** : Vp = -0.7V to -1.0V (2) **TC1304P0811** : Vp = -0.8V to -1.1V (3) **TC1304P0912** : Vp = -0.9V to -1.2V
In addition, the customers may specify their requirements.

ABSOLUTE MAXIMUM RATINGS (T_A=25 °C)

Symbol	Parameter	Rating
V_{DS}	Drain-Source Voltage	7.0 V
V_{GS}	Gate-Source Voltage	-3.0 V
I_{DS}	Drain Current	I_{DSS}
I_{GS}	Gate Current	600 μA
P_{in}	RF Input Power, CW	24 dBm
P_T	Continuous Dissipation	800 mW
T_{CH}	Channel Temperature	175 °C
T_{STG}	Storage Temperature	- 65 °C to +175 °C

TYPICAL NOISE PARAMETERS (T_A=25 °C)

V_{DS} = 4 V, I_{DS} = 50 mA

Frequency	NF_{opt}	G_A	Γ_{opt}		Rn/50
(GHz)	(dB)	(dB)	MAG	ANG	
2	0.32	20.5	0.86	13	0.26
4	0.46	17.6	0.72	37	0.16
6	0.57	15.3	0.60	61	0.14
8	0.68	13.7	0.53	90	0.11
10	0.88	12.7	0.48	117	0.08
12	0.90	11.9	0.47	145	0.05
14	1.04	11.4	0.48	170	0.03
16	1.14	10.5	0.49	-166	0.03
18	1.25	9.8	0.52	-148	0.06

CHIP DIMENSIONS

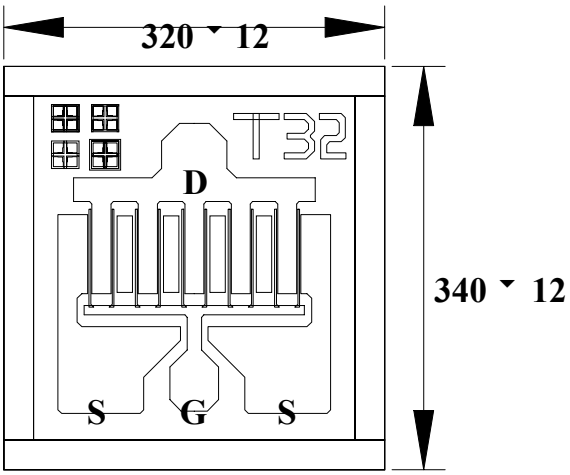

Units: Micrometers

Chip Thickness: 100

Gate Pad: 75 x 70

Drain Pad: 80 x 70

Source Pad: 75 x 80

TYPICAL SCATTERING PARAMETERS (T_A=25 °C) V_{DS} = 4 V, I_{DS} = 50 mA

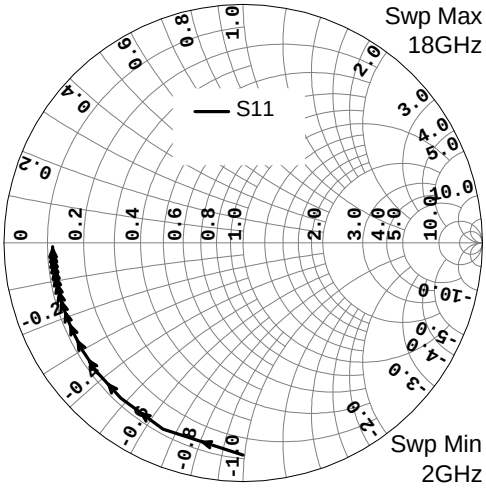

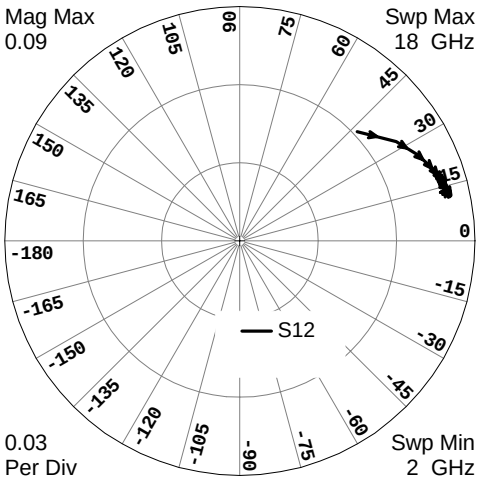

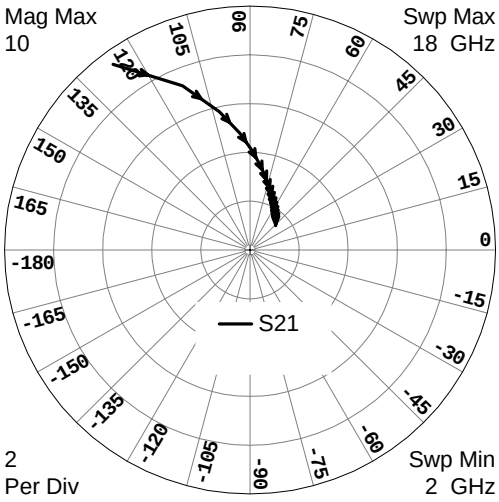

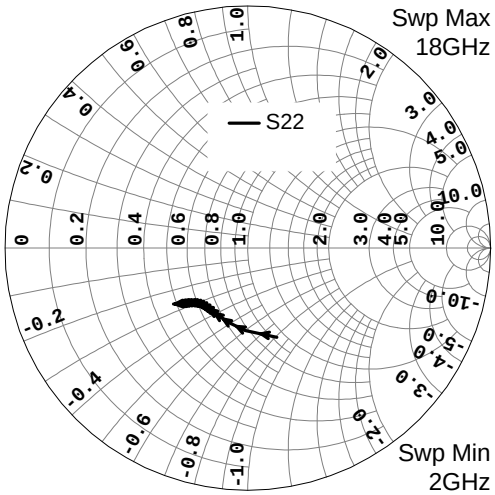

FREQUENCY	S11		S21		S12		S22	
(GHz)	MAG	ANG	MAG	ANG	MAG	ANG	MAG	ANG
2	0.8898	-89.99	9.4335	126.22	0.0614	43.09	0.3867	-72.01
3	0.8498	-113.21	7.2703	112.17	0.0710	32.46	0.3415	-91.67
4	0.8279	-128.22	5.8073	102.40	0.0755	26.12	0.3169	-104.67
5	0.8155	-138.54	4.7993	94.95	0.0780	22.10	0.3045	-113.55
6	0.8082	-146.06	4.0762	88.85	0.0794	19.42	0.2993	-119.81
7	0.8036	-151.80	3.5371	83.59	0.0803	17.58	0.2986	-124.37
8	0.8006	-156.37	3.1217	78.89	0.0808	16.29	0.3009	-127.79
9	0.7986	-160.12	2.7927	74.57	0.0813	15.38	0.3052	-130.44
10	0.7974	-163.28	2.5263	70.54	0.0816	14.74	0.3111	-132.57
11	0.7966	-166.01	2.3063	66.73	0.0818	14.32	0.3181	-134.34
12	0.7962	-168.40	2.1218	63.08	0.0820	14.06	0.3260	-135.86
13	0.7960	-170.54	1.9648	59.58	0.0821	13.93	0.3346	-137.21
14	0.7960	-172.47	1.8297	56.19	0.0823	13.90	0.3438	-138.45
15	0.7961	-174.23	1.7122	52.90	0.0824	13.96	0.3534	-139.61
16	0.7964	-175.87	1.6091	49.69	0.0826	14.09	0.3634	-140.72
17	0.7968	-177.39	1.5178	46.56	0.0828	14.28	0.3737	-141.80
18	0.7972	-178.82	1.4364	43.50	0.0830	14.52	0.3842	-142.86

TYPICAL SCATTERING PARAMETERS (T_A=25 °C) V_{DS} = 6 V, I_{DS} = 80 mA

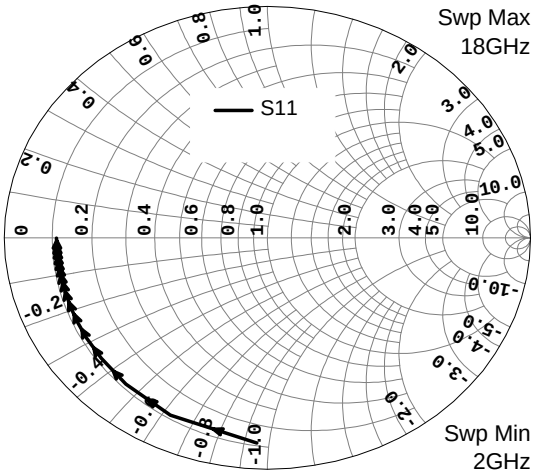

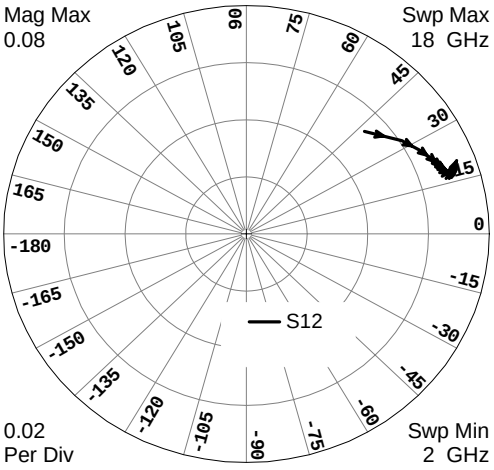

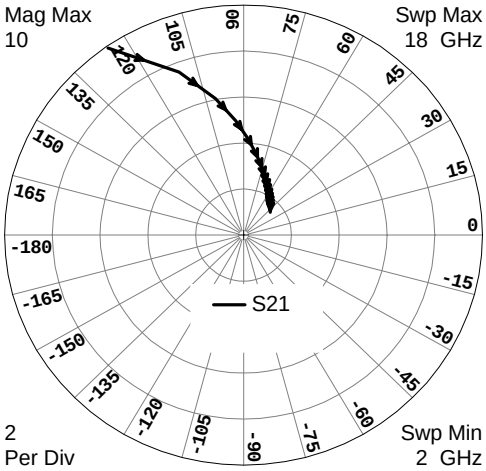

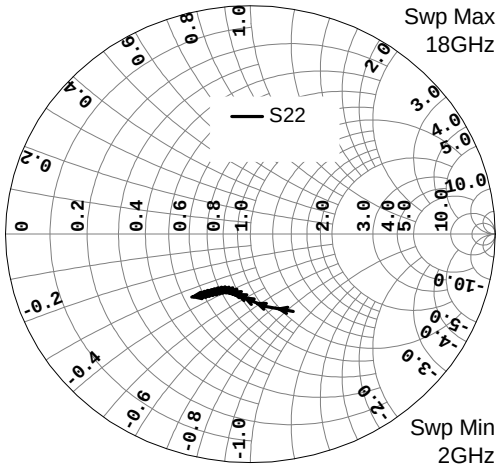

FREQUENCY	S11		S21		S12		S22	
(GHz)	MAG	ANG	MAG	ANG	MAG	ANG	MAG	ANG
2	0.8887	-92.62	9.9171	124.88	0.0530	42.67	0.3809	-62.75
3	0.8506	-115.69	7.5873	110.88	0.0608	32.56	0.3220	-79.19
4	0.8304	-130.42	6.0381	101.19	0.0645	26.75	0.2893	-90.22
5	0.8190	-140.49	4.9806	93.79	0.0665	23.24	0.2725	-97.99
6	0.8123	-147.80	4.2262	87.71	0.0678	21.03	0.2653	-103.70
7	0.8081	-153.38	3.6657	82.44	0.0686	19.63	0.2641	-108.08
8	0.8054	-157.83	3.2350	77.72	0.0692	18.76	0.2668	-111.56
9	0.8036	-161.48	2.8946	73.38	0.0697	18.26	0.2723	-114.43
10	0.8024	-164.56	2.6194	69.31	0.0702	18.02	0.2795	-116.90
11	0.8016	-167.23	2.3926	65.45	0.0706	17.97	0.2882	-119.08
12	0.8011	-169.58	2.2027	61.76	0.0710	18.07	0.2978	-121.07
13	0.8009	-171.67	2.0414	58.21	0.0714	18.28	0.3081	-122.91
14	0.8008	-173.57	1.9028	54.76	0.0718	18.58	0.3189	-124.66
15	0.8008	-175.32	1.7825	51.41	0.0723	18.95	0.3301	-126.33
16	0.8009	-176.93	1.6770	48.14	0.0728	19.38	0.3416	-127.94
17	0.8012	-178.44	1.5839	44.94	0.0733	19.84	0.3532	-129.51
18	0.8015	-179.85	1.5011	41.81	0.0738	20.34	0.3649	-131.05

SMALL SIGNAL MODEL, V_{DS} = 4 V, I_{DS} = 50 mA

SCHEMATI

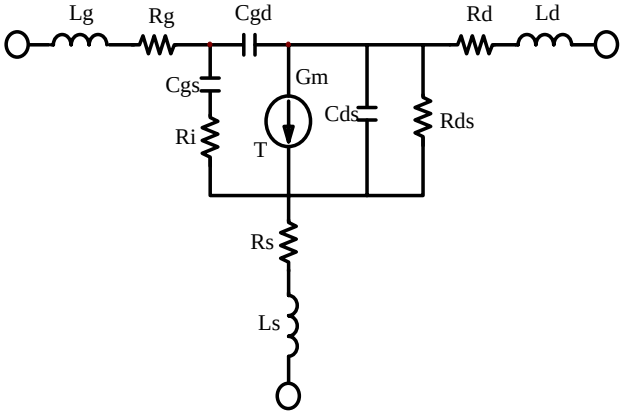

PARAMETERS

Lg	0.04 nH	**Rs**	1.5 Ohm
Rg	1.93 Ohm	**Ls**	0.01 nH
Cgs	1.1075 pF	**Cds**	0.15 pF
Ri	2.158 Ohm	**Rds**	105.4 Ohm
Cgd	0.087 pF	**Rd**	1.29 Ohm
Gm	266.7 mS	**Ld**	0.04 nH
T	3.6 psec		

SMALL SIGNAL MODEL, V_{DS} = 6 V, I_{DS} = 80 mA

SCHEMATI

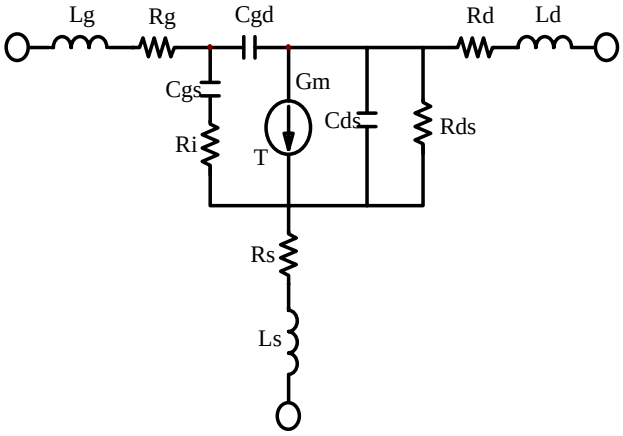

PARAMETERS

Lg	0.04 nH	**Rs**	1.5 Ohm
Rg	1.93 Ohm	**Ls**	0.01 nH
Cgs	1.326 pF	**Cds**	0.137 pF
Ri	2.487 Ohm	**Rds**	111.5 Ohm
Cgd	0.072 pF	**Rd**	1.29 Ohm
Gm	287.3 mS	**Ld**	0.04 nH
T	4.64 psec		

LARGE SIGNAL MODEL, V_{DS} = 6 V, I_{DS} = 80 mA

SCHEMATIC

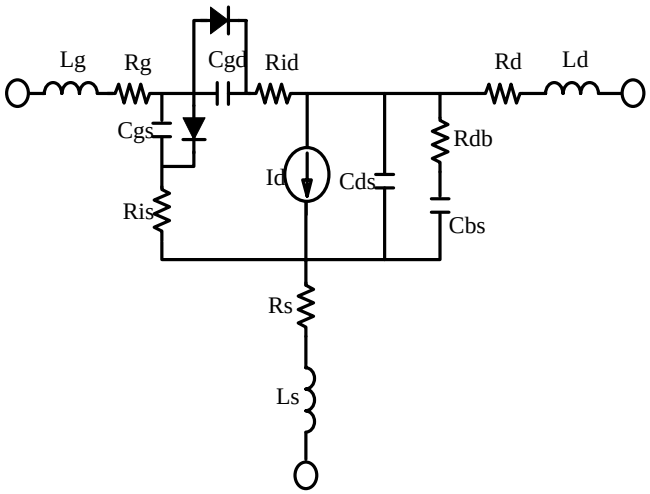

TOM2 MODEL PARAMETERS

Parameters		Parameters	
VTO	-0.393 V	**VMAX**	0.5 V
ALPHA	6.47	**CGD**	0.0754 pF
BETA	0.4622	**CGS**	6.18 pF
GAMMA	0.0394	**CDS**	0.1313 pF
DELTA	0.3935	**RIS**	2.2 Ohm
Q	0.78	**RID**	0.001 Ohm
NG	0.1	**VBR**	9 V
ND	0.01	**RDB**	120 Ohm
TAU	4.255 ps	**CBS**	0.042 pF
RG	1.2 Ohm	**TNOM**	25 ℃
RD	1.29 Ohm	**LS**	0.01 nH
RS	1.594 Ohm	**LG**	0.041 nH
IS	1E-11 mA	**LD**	0.04 nH
N	1	**AFAC**	1
VBI	1 V	**NFING**	1
VDELTA	0.2 V		

CHIP HANDLING

DIE ATTACHMENT: Conductive epoxy or eutectic die attach is recommended. For eutectic die attach can be accomplished with Au-Sn (80%Au-20%Sn) perform in State Temperature: 290℃ ±5℃ ; Handling Tool : Tweezers ; Time: less than 1min .

WIRE BONDING: The recommended wire bond method is thermo-compression bonding with 0.7 or 1.0 mil (0.018 or 0.025mm) gold wire. Stage Temperature: 220°C to 250°C ; Bond Tip Temperature : 150℃ ; Bond Force: 20 to 30 gms depending on size of wire and Bond Tip Temperature.

HANDLING PRECAUTIONS: The user must operate in a clean, dry environment. Care should be exercised during handling avoid damage to the devices. Electrostatic Discharge (ESD) precautions should be observed at all stages of storage, handling, assembly, and testing. The static discharge must be less than 300V.