TC1188/TC1189

MAX8863/64 Pin Compatible, Low Dropout, 120 mA Linear Regulators

Features

- Input Voltage Range: 2.7 V to 6.0 V
- 120 mA Output Current
- Low Supply Current: 50 µA, (typical)
- Low Dropout Voltage: 110 mV, (typical at 100 mA)
- Fast Turn-On from Shutdown: 140 µsec (typical)
- Low Output Noise
- Over-Current and Over-Temperature Protection
- Low Power Shutdown Mode
- Auto Discharge of Output Capacitor (TC1189)

Applications

- Battery Powered Systems
- Portable Computers
- Medical Instruments
- Cellular, Cordless Phones
- PDAs
- Pagers

Package Type

5-Pin SOT-23A

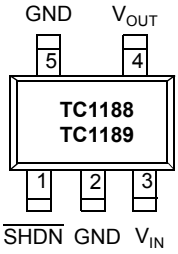

NOTE: 5-Pin SOT-23A is equivalent to the EIAJ (SC-74A)

General Description

The TC1188 and TC1189 are fixed output, low dropout linear regulators that operate from a 2.7V to 6.0V input voltage source. The output is capable of delivering up to 120 mA while consuming only 50 µA of quiescent current. The low dropout voltage, 120 mV, make the TC1188 and TC1189 good choices for battery powered applications. Integrated over-current and over-temperature protection features provide for a fault tolerant solution.

The TC1189 includes an output voltage auto discharge feature. When shutdown, the TC1189 will automatically discharge the output voltage using an internal N-Channel MOSFET switch.

Fixed output voltage options for the TC1188/TC1189 are: 1.80V, 2.80V, 2.84V and 3.15V. Both the TC1188 and TC1189 are available in SOT23-5 packages.

Typical Application Circuit

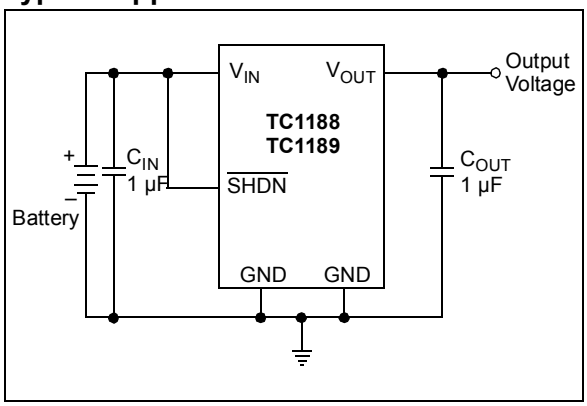

© 2002 Microchip Technology Inc.

1.0 ELECTRICAL CHARACTERISTICS

Absolute Maximum Ratings*

Input Voltage 6.5V

Output Short-Circuit Duration .....Infinite

Output Voltage ..... (-0.3V) to (V_{IN} + 0.3V)

Maximum Voltage On Any Pin.... (-0.3V) to (V_{IN} +0.3V)

Continuous Power Dissipation (T_A = +70°C)

SOT-23-5 (derate 7.1 mW/°C above +70°C)

.....571 mW

Operating Temperature Range..... -40°C to 85°C

Storage Temperature .....-65°C to +160°C

Lead Temperature (Soldering, 10 Sec.) ..... +300°C

***Notice:** *Stresses above those listed under "Absolute Maximum Ratings" may cause permanent damage to the device. These are stress ratings only and functional operation of the device at these or any other conditions above those indicated in the operation sections of the specifications is not implied. Exposure to Absolute Maximum Rating conditions for extended periods may affect device reliability.

DC SPECIFICATIONS

Electrical Characteristics: V_{IN} = +3.6V, GND = 0V, T_A = T_{MIN} to T_{MAX}, unless otherwise noted. Typical values are at T_A = +25°C. **(Note 1)**

Parameters	Symbol	Min	Typ	Max	Units	Conditions
Input Voltage	V_{IN}	V_{OUT}+0.5V 2.7	— —	6.0 6.0	V	$V_{OUT} \geq$ 2.5V V_{OUT} = 1.8V **(Note 2)**
Output Voltage	V_{OUT}	3.05	3.15	3.25	V	0 mA ≤ I_{OUT} ≤ 50 mA T
		2.75	2.84	2.93	V	0 mA ≤ I_{OUT} ≤ 50 mA S
		2.70	2.80	2.88	V	0 mA ≤ I_{OUT} ≤ 50 mA R
		1.745	1.80	1.85	V	0 mA ≤ I_{OUT} ≤ 50 mA Q
Maximum Output Current	I_{OUT}	120	—	—	mA	
Current Limit	I_{LIM}	—	280	—	mA	**Note 3**
Input Current	I_{IN}	—	50	90	µA	I_{OUT} = 0
Dropout Voltage		—	1.1	—	mV	I_{OUT} = 1 mA
		—	55	120	mV	I_{OUT} = 50 mA
		—	110	240	mV	I_{OUT} = 100 mA **(Note 4)**
Line Regulation	ΔV_{LNR}	-0.10	0.001	0.10	%/V	V_{IN} = V_{OUT} + 0.5V to 6.0V
		—	—	—	%/V	I_{OUT} = 1 mA
Load Regulation	ΔV_{LDR}	—	0.01	0.040	%/mA	I_{OUT} = 0 mA to 50 mA
Output Voltage Noise		—	350	—	μV_{RMS}	10 Hz to 1 MHz, C_{OUT} = 1 µF
		—	220	—	μV_{RMS}	10 Hz to 1 MHz C_{OUT} = 100 µF
Wake Up Time (from Shutdown Mode)	t_{WK}	—	10	—	µsec	V_{IN} = 3.6V C_{IN} = 1 µF, C_{OUT} = 1 µF I_L = 30 mA, (See Figure 3-1)
Setting Time (from Shutdown Mode)	t_S	—	140	—	µsec	V_{IN} = 3.6V C_{IN} = 1 µF, C_{OUT} = 1 µF I_L = 30 mA, (See Figure 3-1)

Note 1: Limits are 100% production tested at T_A = +25°C. Limits over the operating temperature range are ensured through correlation using Statistical Quality Control (SQC) methods.

2: Validated by line regulation test.

3: Not tested. For design purposes, the current limit should be considered 150 mA minimum to 410 mA maximum.

4: The dropout voltage is defined as (V_{IN} – V_{OUT}) when V_{OUT} is 100 mV below the value of V_{OUT} for V_{IN} = V_{OUT} +2V.

© 2002 Microchip Technology Inc.

DC SPECIFICATIONS (CONTINUED)

Electrical Characteristics: V_{IN} = +3.6V, GND = 0V, $T_A = T_{MIN}$ to T_{MAX}, unless otherwise noted. Typical values are at T_A = +25°C. **(Note 1)**

Parameters	Symbol	Min	Typ	Max	Units	Conditions
Shutdown:						
$\overline{SHDN}$ Input Threshold	V_{IH}	2.0	—	—	V	
	V_{IL}	—	—	0.4	V	
$\overline{SHDN}$ Input Bias Current	I_{shdn}	—	0.1	100	nA	$V_{SHDN} = V_{IN}$, T_A = +25°C, $T_A = T_{MAX}$
		—	50	—	nA	$V_{SHDN} = V_{IN}$, T_A = +25°C, $T_A = T_{MAX}$
Shutdown Supply Current	I_{qshdn}	—	0.002	1	µA	V_{OUT} = 0V, T_A = +25°C, $T_A = T_{MAX}$
		—	0.02	—	µA	V_{OUT} = 0V, T_A = +25°C, $T_A = T_{MAX}$
Shutdown to Output Discharge Delay (TC1189)		—	1	—	msec	C_{OUT} = 1 µF, no load at 10% of V_{OUT}
Thermal Protection						
Thermal Shutdown Temperature	T_{SHDN}	—	170	—	°C	
Thermal Shutdown Hysteresis	ΔT_{SHDN}	—	20	—	°C	

Note 1: Limits are 100% production tested at T_A = +25°C. Limits over the operating temperature range are ensured through correlation using Statistical Quality Control (SQC) methods.

2: Validated by line regulation test.

3: Not tested. For design purposes, the current limit should be considered 150 mA minimum to 410 mA maximum.

4: The dropout voltage is defined as ($V_{IN} - V_{OUT}$) when V_{OUT} is 100 mV below the value of V_{OUT} for $V_{IN} = V_{OUT}$ +2V.

2.0 TYPICAL PERFORMANCE CURVES

Note: The graphs and tables provided following this note are a statistical summary based on a limited number of samples and are provided for informational purposes only. The performance characteristics listed herein are not tested or guaranteed. In some graphs or tables, the data presented may be outside the specified operating range (e.g., outside specified power supply range) and therefore outside the warranted range.

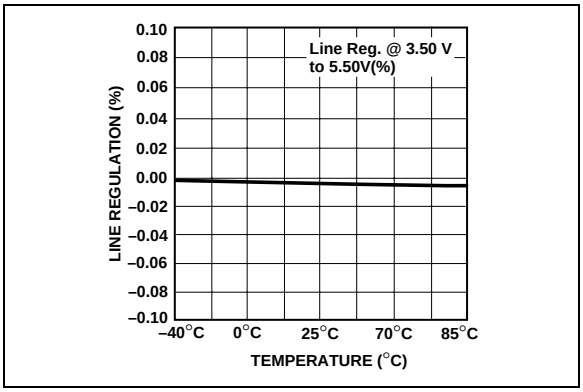

FIGURE 2-1: *Line Regulation vs. Temperature. (TC1188)*

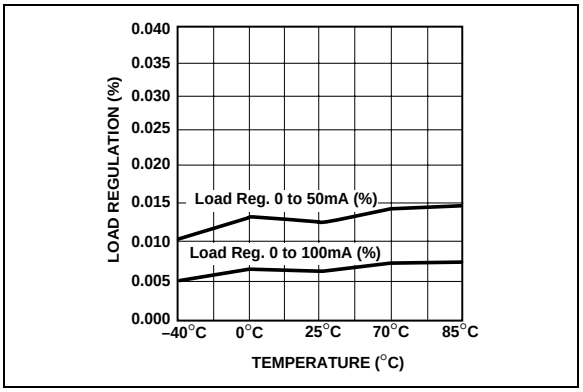

FIGURE 2-4: *Load Regulation vs. Temperature. (TC1188)*

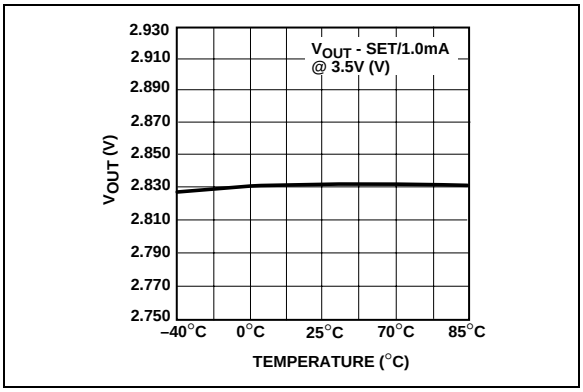

FIGURE 2-2: *Output Voltage vs. Temperature. (TC1188)*

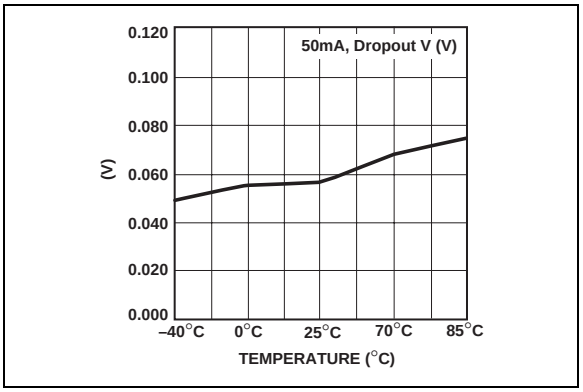

FIGURE 2-5: *Dropout Voltage vs. Temperature. (TC1188)*

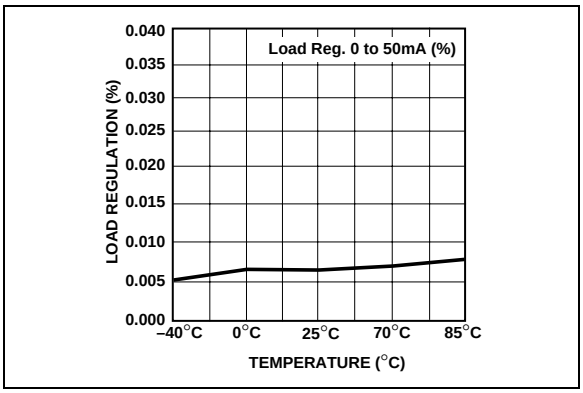

FIGURE 2-3: *Load Regulation vs. Temperature. (TC1188)*

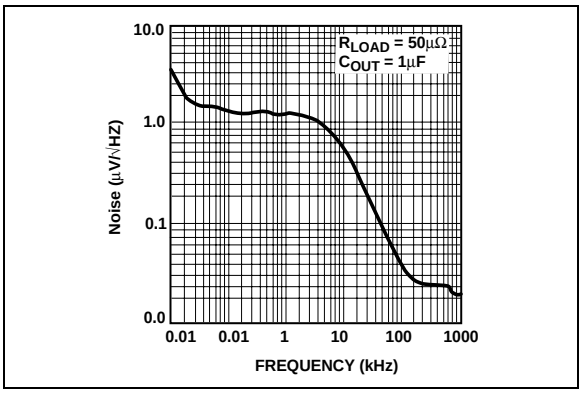

FIGURE 2-6: *Output Noise vs. Frequency. (TC1188)*

© 2002 Microchip Technology Inc.

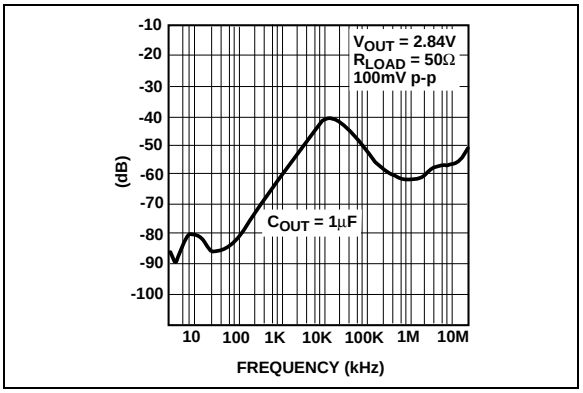

FIGURE 2-7: *Power Supply Rejection Ratio vs. Frequency. (TC1188)*

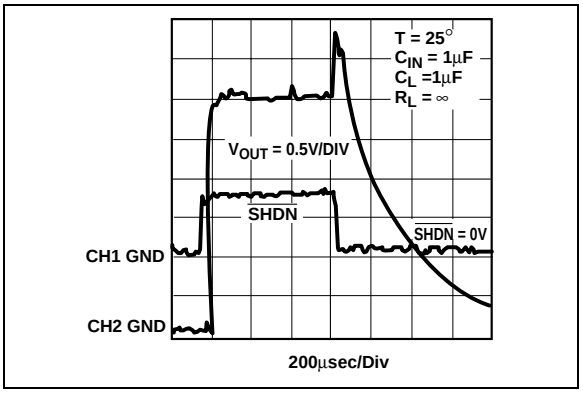

FIGURE 2-8: *TC1189 Shutdown Transient Response.*

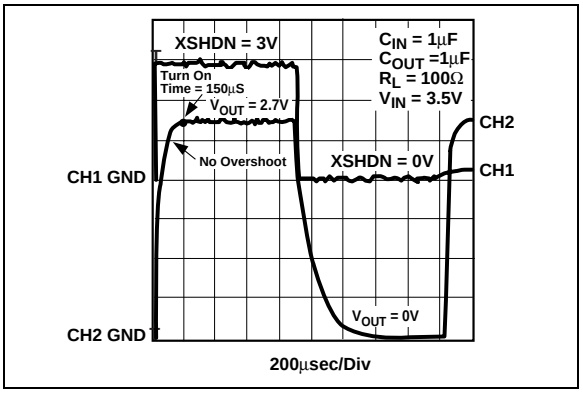

FIGURE 2-9: *TC1189 Shutdown Transient Response.*

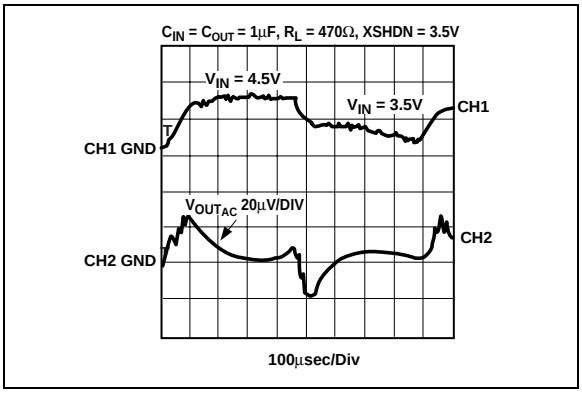

FIGURE 2-10: *TC1189 Line Response.*

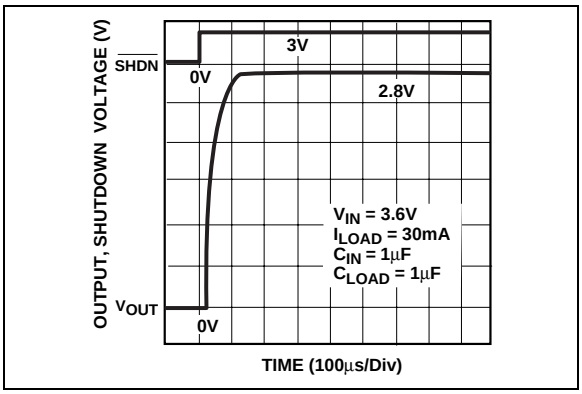

FIGURE 2-11: *Wake-Up Response Time.*

3.0 PIN DESCRIPTIONS

The descriptions of the pins are listed in Table 3-1.

TABLE 3-1: PIN FUNCTION TABLE

Symbol	Description
SHDN	Active Low Shutdown Input. When the $\overline{SHDN}$ input is low (< 0.2V), the quiscent current for the TC1188/TC1189 is reduced to 0.1 nA. When the input voltage to the $\overline{SHDN}$ pin is high (> 2.0V) the output of the TC1188/TC1189 is enabled. For the TC1189 only, the output capacitor is discharged by an internal switch when the $\overline{SHDN}$ is low.
GND	Ground. Connect to ground.
V_{IN}	Unregulated Input Voltage. The input voltage can range from 2.7V to 6.0V.
V_{OUT}	Regulator Output. Sources up to 120 mA. Bypass with a 1 µF, <1 Ω typical ESR capacitor to GND.
GND	Connect to GND.

3.1 Detailed Description

The TC1188/TC1189 devices are fixed output, low dropout linear regulators. Utilizing CMOS construction, the internal quiescent current consumed by the regulator is minimized when compared to older bipolar low dropout regulators.

The LDO output voltage is sensed at the non-inverting pin of the internal error amplifier. The internal voltage reference is sensed at the inverting pin of the internal error amplifier. The error amplifier adjusts the gate source voltage of the internal P-channel pass device until the divided down output voltage matches the internal reference voltage. When it does, the LDO output voltage is in regulation.

The $\overline{SHDN}$, when pulled low, is used to turn off the P-Channel MOSFET and lower the internal quiescent current to less than 1 µA maximum. For normal operation, the $\overline{SHDN}$ pin is pulled to a high level. (> 2.0V).

The TC1189 incorporates an internal N-Channel MOSFET, which is used to discharge the output capacitor when shutdown. The TC1188 does not have the internal N-Channel MOSFET, therefore, when the device is shutdown, the output voltage will decrease at a rate which is dependant on the load current.

3.2 Turn-On Response

The turn-on response is defined as two separate response categories: Wake-Up Time (t_{WK}) and Settling Time (t_S).

The TC1188/TC1189 have fast wake-up times (10 µsec typical) when released from shutdown. See Figure 3-1 for the wake-up time, designated as t_{WK}. The wake-up time is defined as the time it takes for the output to rise to 2% of the V_{OUT} value after being released from shutdown.

The total turn on response is defined as the Settling Time (t_S) (Figure 3-1). Settling Time (inclusive with t_{WK}) is defined as the condition when the output is within 2% of its fully enabled value (140 µsec typical) when released from shutdown. The settling time of the output voltage is dependent on load conditions and output capacitance on V_{OUT} (RC response).

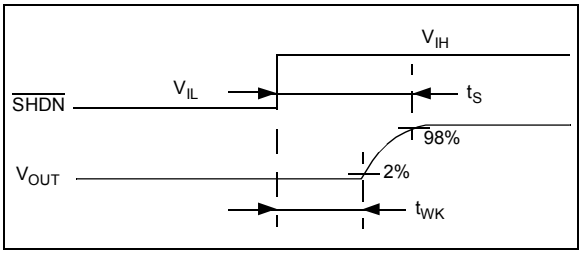

FIGURE 3-1: *Wake-Up Response Time.*

3.3 Internal P-Channel Pass Transistor

The Internal P-Channel MOSFET is operated in the linear region to regulate the LDO output voltage. The RDSon of the P-Channel MOSFET is approximately 1.1 Ω, making the LDO able to regulate with little input to output voltage differential, "Low Dropout". Another benefit of using CMOS construction is that the P-Channel MOSFET is a voltage controlled device, so it doesn't consume a fraction of the bias current required of bipolar PNP LDOs.

© 2002 Microchip Technology Inc.

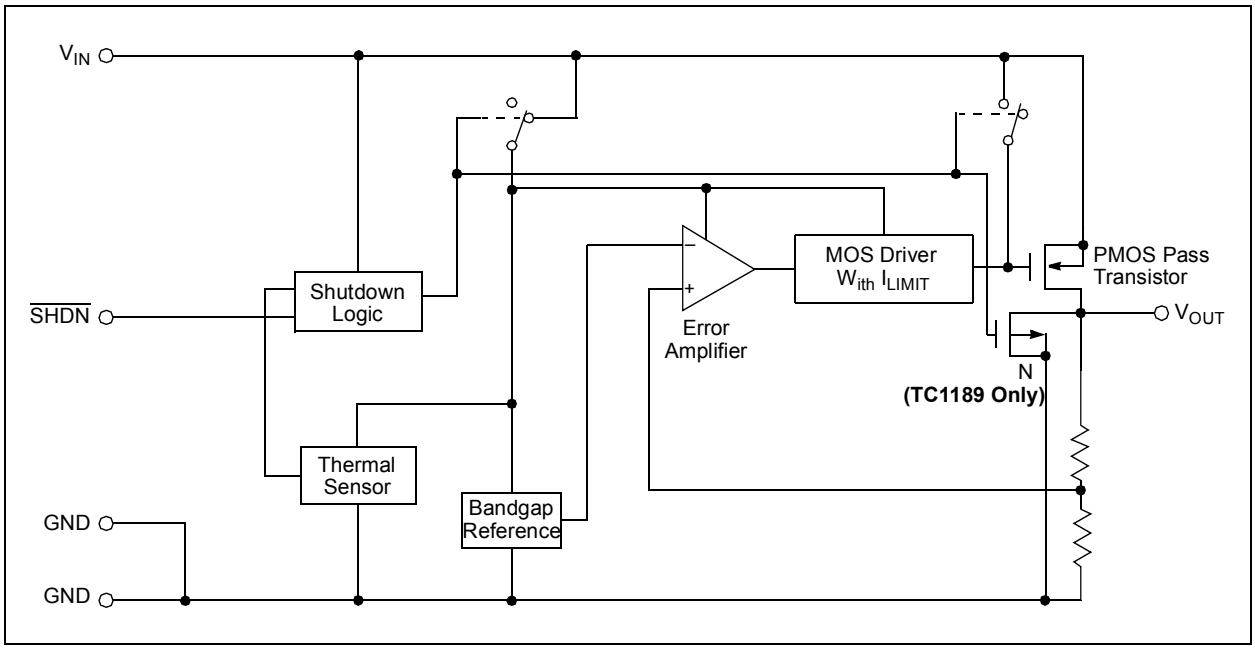

FIGURE 3-2: *Functional Block Diagram.*

3.4 Shutdown

The $\overline{SHDN}$ input is used to turn off the LDO P-Channel pass MOSFET and internal bias. When shutdown, the typical quiescent current consumed by the LDO is 0.1 nA. A logic low (< 0.4V) at the $\overline{SHDN}$ input will cause the device to operate in the shutdown mode. A logic high (> 2.0V) at the $\overline{SHDN}$ input will cause the device to operate in the normal mode.

3.5 Current Limit

The LDO output current is monitored internal to the TC1188/TC1189. The internal current sense will limit the LDO output current to a typical value of 280 mA. The current limit can range from approximately 50 mA to 410 mA from device to device. The internal current limit protects the device from a continuous output short circuit.

3.6 Thermal Overload Protection

Integrated thermal protection circuitry shuts the TC1188/TC1189 off when the internal die temperature exceeds approximately 170°C. The regulator output remains off until the internal die temperature drops to approximately 150°C.

3.7 Operating Region and Power Dissipation

The internal power dissipation to the LDO is primarily determined by the input voltage, output voltage and output current. The following equation is used to approximate the worst case for power dissipation:

EQUATION

$$P_D = V_{IN(MAX)} - V_{OUT(MIN)} \times I_{LOAD(MAX)}$$

Where:

P_D = Worst case internal power dissipation.

$V_{IN(MAX)}$ = Maximum input voltage.

$V_{OUT(MIN)}$ = Minimum output voltage.

$I_{LOAD(MAX)}$ = Maximum output current.

The maximum power dissipation is a function of the maximum ambient temperature, $T_{A(MAX)}$, the maximum junction temperature, $T_{J(MAX)}$, and the package thermal resistance from junction to air, θ_{JA}. The 5-Pin SOT23A package has a θ_{JA} of approximately 220°C/Watt.

EQUATION

$$P_D = (T_{J(MAX)} - T_{A(MAX)})/\theta_{JA}$$

Where all terms are previously defined.

EXAMPLE 3-1:

The previously defined power dissipation equations can be used to ensure that the regulator thermal operation is within limits.

Given:

$V_{IN(MAX)}$ = 3.0V +10%

$V_{OUT(MAX)}$ = 2.7V - 2.5%

$I_{LOAD(MAX)}$ = 40 mA

$T_{J(MAX)}$ = 125°C

$T_{A(MAX)}$ = 55°C

Find:

1. Actual power dissipation.
2. Maximum allowable dissipation.

Actual power dissipation:

$$P_D = V_{IN(MAX)} - V_{OUT(MIN)} \times I_{LOAD(MAX)}$$
$$P_D = ((3.0 * 1.1) - (2.7 * 0.975)) * 40 \text{ mA}$$
$$P_D = 26.7 \text{ mWatts}$$

Maximum allowable power dissipation:

$$P_D = (T_{J(MAX)} - T_{A(MAX)})/\theta_{JA}$$
$$P_{D(MAX)} = (125 - 55) / 220$$
$$P_{D(MAX)} = 318 \text{ mWatts.}$$

In this example, the TC1188/TC1189 dissipates a maximum of 26.7 mW below the allowable limit of 318 mW. In a similar manner, the power dissipation equation, as a function of V_{IN}, V_{OUT} and $I_{LOAD,}$ along with the power dissipation equation, as a function of maximum junction temperature, maximum ambient temperature and junction to air thermal resistance, can be used to calculate maximum current and/or maximum input voltage limits.

4.0 APPLICATIONS INFORMATION

4.1 Input Capacitor

A 1 µF (or larger) capacitor is recommended to bypass the LDO input and lower input impedance for circuit stability when operating from batteries or high impedance sources. The input capacitor can be ceramic, tantalum or aluminum electrolytic. For applications that require low noise and input power supply rejection, low effective series resistance (ESR) ceramic capacitors are recommended over higher ESR electrolytic capacitors. Larger value input capacitors can be used to improve circuit performance.

4.2 Output Capacitor

A 1 µF (minimum) capacitor is required from V_{OUT} to ground to ensure circuit stability. The output capacitor should have an ESR greater than 0.1 ohms and less than 2 ohm. Tantalum or aluminum electrolytic capacitors are recommended. Since many aluminum electrolytic capacitors freeze at approximately -30°C, solid tantalums are recommended for applications operating below 25°C.

© 2002 Microchip Technology Inc.

5.0 PACKAGING INFORMATION

5.1 Package Marking Information

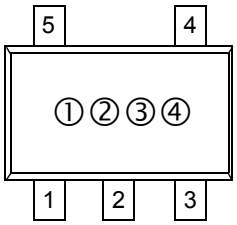

Part Number	(V)	Code
TC1188-XECT	1.80	G4
TC1188-XECT	2.80	G3
TC1188-XECT	2.84	G2
TC1188-XECT	3.15	G1
TC1189-XECT	1.80	H4
TC1189-XECT	2.80	H3
TC1189-XECT	2.84	H2
TC1189-XECT	3.15	H1

Legend:	1-2	Part Number code + temperature range and voltage*
	3	Year and two-month period code
	4	Lot ID

Note: In the event the full Microchip part number cannot be marked on one line, it will be carried over to the next line thus limiting the number of available characters for customer specific information.

***** Standard OTP marking consists of Microchip part number, year code, week code, and traceability code.

5-Lead Plastic Small Outline Transistor (OT) (SOT23)

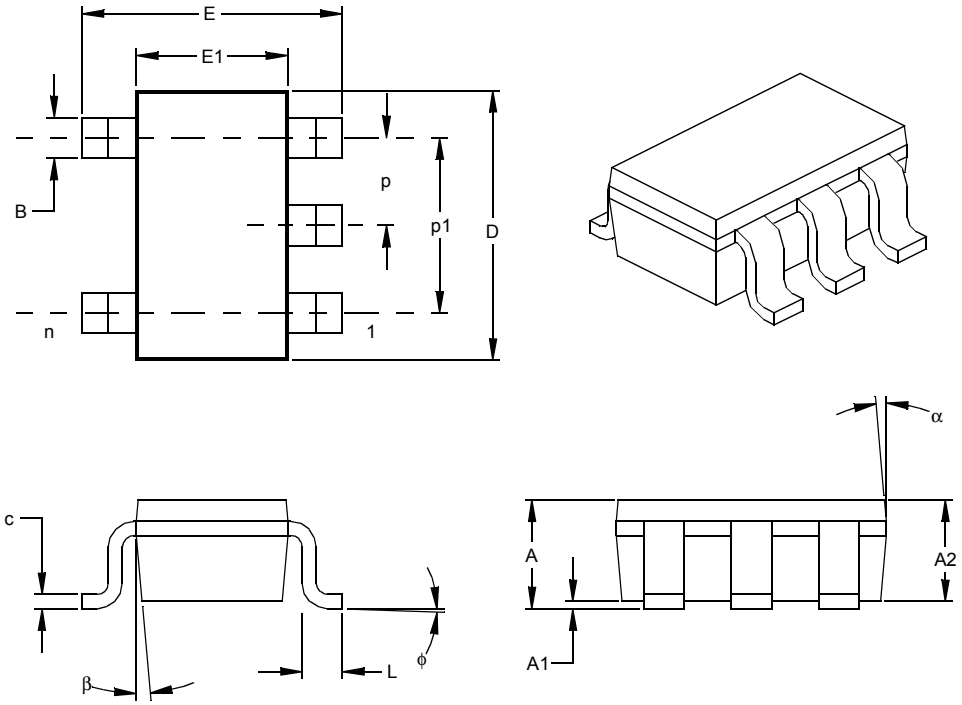

Units		INCHES*			MILLIMETERS		
Dimension Limits		MIN	NOM	MAX	MIN	NOM	MAX
Number of Pins	n		5			5	
Pitch	p		.038			0.95	
Outside lead pitch (basic)	p1		.075			1.90	
Overall Height	A	.035	.046	.057	0.90	1.18	1.45
Molded Package Thickness	A2	.035	.043	.051	0.90	1.10	1.30
Standoff §	A1	.000	.003	.006	0.00	0.08	0.15
Overall Width	E	.102	.110	.118	2.60	2.80	3.00
Molded Package Width	E1	.059	.064	.069	1.50	1.63	1.75
Overall Length	D	.110	.116	.122	2.80	2.95	3.10
Foot Length	L	.014	.018	.022	0.35	0.45	0.55
Foot Angle	ϕ	0	5	10	0	5	10
Lead Thickness	c	.004	.006	.008	0.09	0.15	0.20
Lead Width	B	.014	.017	.020	0.35	0.43	0.50
Mold Draft Angle Top	α	0	5	10	0	5	10
Mold Draft Angle Bottom	β	0	5	10	0	5	10

* Controlling Parameter
§ Significant Characteristic

Notes:
Dimensions D and E1 do not include mold flash or protrusions. Mold flash or protrusions shall not exceed .010” (0.254mm) per side.
JEDEC Equivalent: MO-178
Drawing No. C04-091

© 2002 Microchip Technology Inc.

ON-LINE SUPPORT

Microchip provides on-line support on the Microchip World Wide Web (WWW) site.

The web site is used by Microchip as a means to make files and information easily available to customers. To view the site, the user must have access to the Internet and a web browser, such as Netscape or Microsoft Explorer. Files are also available for FTP download from our FTP site.

Connecting to the Microchip Internet Web Site

The Microchip web site is available by using your favorite Internet browser to attach to:

www.microchip.com

The file transfer site is available by using an FTP service to connect to:

ftp://ftp.microchip.com

The web site and file transfer site provide a variety of services. Users may download files for the latest Development Tools, Data Sheets, Application Notes, User's Guides, Articles and Sample Programs. A variety of Microchip specific business information is also available, including listings of Microchip sales offices, distributors and factory representatives. Other data available for consideration is:

- Latest Microchip Press Releases
- Technical Support Section with Frequently Asked Questions
- Design Tips
- Device Errata
- Job Postings
- Microchip Consultant Program Member Listing
- Links to other useful web sites related to Microchip Products
- Conferences for products, Development Systems, technical information and more
- Listing of seminars and events

Systems Information and Upgrade Hot Line

The Systems Information and Upgrade Line provides system users a listing of the latest versions of all of Microchip's development systems software products. Plus, this line provides information on how customers can receive any currently available upgrade kits.The Hot Line Numbers are:

1-800-755-2345 for U.S. and most of Canada, and

1-480-792-7302 for the rest of the world.

013001

READER RESPONSE

It is our intention to provide you with the best documentation possible to ensure successful use of your Microchip product. If you wish to provide your comments on organization, clarity, subject matter, and ways in which our documentation can better serve you, please FAX your comments to the Technical Publications Manager at (480) 792-4150.

Please list the following information, and use this outline to provide us with your comments about this Data Sheet.

To: Technical Publications Manager Total Pages Sent

RE: Reader Response

From: Name _____

Company _____

Address _____

City / State / ZIP / Country _____

Telephone: (_____) _____ - _____ FAX: (_____) _____ - _____

Application (optional):

Would you like a reply? ___Y ___N

Device: **TC1188/TC1189** Literature Number: **DS21364B**

Questions:

1. What are the best features of this document?

2. How does this document meet your hardware and software development needs?

3. Do you find the organization of this data sheet easy to follow? If not, why?

4. What additions to the data sheet do you think would enhance the structure and subject?

5. What deletions from the data sheet could be made without affecting the overall usefulness?

6. Is there any incorrect or misleading information (what and where)?

7. How would you improve this document?

8. How would you improve our software, systems, and silicon products?

© 2002 Microchip Technology Inc.

PRODUCT IDENTIFICATION SYSTEM

To order or obtain information, e.g., on pricing or delivery, refer to the factory or the listed sales office.

PART NO.	X	/XX
Device	Voltage Output	Package

Device:	TC1188:	100 mA, MAX8863/64 Pin Compatible LDO
	TC1189:	100 mA, MAX8863/64 Pin Compatible LDO
Voltage Output Options:	Q =	1.80V
	R =	2.80V
	S =	2.84V
	T =	3.15V
Package:	ECTTR =	SOT-23A, 5-Pin (Tape and Reel)

Examples:

a) TC1188QECTTR: 1.80V, 100 mA, MAX8863/64 Pin Compatible LDO

b) TC1188RECTTR: 2.80V, 100 mA, MAX8863/64 Pin Compatible LDO

c) TC1188SECTTR: 2.84V, 100 mA, MAX8863/64 Pin Compatible LDO

d) TC1188TECTTR: 3.15V, 100 mA, MAX8863/64 Pin Compatible LDO

a) TC1189QECTTR: 1.80V, 100 mA, MAX8863/64 Pin Compatible LDO

b) TC1189RECTTR: 2.80V, 100 mA, MAX8863/64 Pin Compatible LDO

c) TC1189SECTTR: 2.84V, 100 mA, MAX8863/64 Pin Compatible LDO

d) TC1189TECTTR: 3.15V, 100 mA, MAX8863/64 Pin Compatible LDO

Sales and Support

Data Sheets

Products supported by a preliminary Data Sheet may have an errata sheet describing minor operational differences and recommended workarounds. To determine if an errata sheet exists for a particular device, please contact one of the following:

1. Your local Microchip sales office
2. The Microchip Corporate Literature Center U.S. FAX: (480) 792-7277
3. The Microchip Worldwide Site (www.microchip.com)

Please specify which device, revision of silicon and Data Sheet (include Literature #) you are using.

New Customer Notification System

Register on our web site (www.microchip.com/cn) to receive the most current information on our products.

NOTES:

© 2002 Microchip Technology Inc.

Information contained in this publication regarding device applications and the like is intended through suggestion only and may be superseded by updates. It is your responsibility to ensure that your application meets with your specifications. No representation or warranty is given and no liability is assumed by Microchip Technology Incorporated with respect to the accuracy or use of such information, or infringement of patents or other intellectual property rights arising from such use or otherwise. Use of Microchip's products as critical components in life support systems is not authorized except with express written approval by Microchip. No licenses are conveyed, implicitly or otherwise, under any intellectual property rights.

Trademarks

The Microchip name and logo, the Microchip logo, FilterLab, KEELOQ, microID, MPLAB, MXDEV, PIC, PICmicro, PICMASTER, PICSTART, PRO MATE, SEEVAL and The Embedded Control Solutions Company are registered trademarks of Microchip Technology Incorporated in the U.S.A. and other countries.

dsPIC, dsPICDEM.net, ECONOMONITOR, FanSense, FlexROM, fuzzyLAB, In-Circuit Serial Programming, ICSP, ICEPIC, microPort, Migratable Memory, MPASM, MPLIB, MPLINK, MPSIM, MXLAB, PICC, PICDEM, PICDEM.net, rfPIC, Select Mode and Total Endurance are trademarks of Microchip Technology Incorporated in the U.S.A.

Serialized Quick Turn Programming (SQTP) is a service mark of Microchip Technology Incorporated in the U.S.A.

All other trademarks mentioned herein are property of their respective companies.

© 2002, Microchip Technology Incorporated, Printed in the U.S.A., All Rights Reserved.

Printed on recycled paper.

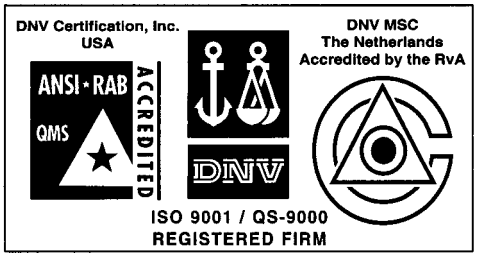

Microchip received QS-9000 quality system certification for its worldwide headquarters, design and wafer fabrication facilities in Chandler and Tempe, Arizona in July 1999 and Mountain View, California in March 2002. The Company's quality system processes and procedures are QS-9000 compliant for its PICmicro® 8-bit MCUs, KEELOQ® code hopping devices, Serial EEPROMs, microperipherals, non-volatile memory and analog products. In addition, Microchip's quality system for the design and manufacture of development systems is ISO 9001 certified.

WORLDWIDE SALES AND SERVICE

AMERICAS

Corporate Office
2355 West Chandler Blvd.
Chandler, AZ 85224-6199
Tel: 480-792-7200 Fax: 480-792-7277
Technical Support: 480-792-7627
Web Address: http://www.microchip.com

Rocky Mountain
2355 West Chandler Blvd.
Chandler, AZ 85224-6199
Tel: 480-792-7966 Fax: 480-792-4338

Atlanta
500 Sugar Mill Road, Suite 200B
Atlanta, GA 30350
Tel: 770-640-0034 Fax: 770-640-0307

Boston
2 Lan Drive, Suite 120
Westford, MA 01886
Tel: 978-692-3848 Fax: 978-692-3821

Chicago
333 Pierce Road, Suite 180
Itasca, IL 60143
Tel: 630-285-0071 Fax: 630-285-0075

Dallas
4570 Westgrove Drive, Suite 160
Addison, TX 75001
Tel: 972-818-7423 Fax: 972-818-2924

Detroit
Tri-Atria Office Building
32255 Northwestern Highway, Suite 190
Farmington Hills, MI 48334
Tel: 248-538-2250 Fax: 248-538-2260

Kokomo
2767 S. Albright Road
Kokomo, Indiana 46902
Tel: 765-864-8360 Fax: 765-864-8387

Los Angeles
18201 Von Karman, Suite 1090
Irvine, CA 92612
Tel: 949-263-1888 Fax: 949-263-1338

New York
150 Motor Parkway, Suite 202
Hauppauge, NY 11788
Tel: 631-273-5305 Fax: 631-273-5335

San Jose
Microchip Technology Inc.
2107 North First Street, Suite 590
San Jose, CA 95131
Tel: 408-436-7950 Fax: 408-436-7955

Toronto
6285 Northam Drive, Suite 108
Mississauga, Ontario L4V 1X5, Canada
Tel: 905-673-0699 Fax: 905-673-6509

ASIA/PACIFIC

Australia
Microchip Technology Australia Pty Ltd
Suite 22, 41 Rawson Street
Epping 2121, NSW
Australia
Tel: 61-2-9868-6733 Fax: 61-2-9868-6755

China - Beijing
Microchip Technology Consulting (Shanghai) Co., Ltd., Beijing Liaison Office
Unit 915
Bei Hai Wan Tai Bldg.
No. 6 Chaoyangmen Beidajie
Beijing, 100027, No. China
Tel: 86-10-85282100 Fax: 86-10-85282104

China - Chengdu
Microchip Technology Consulting (Shanghai) Co., Ltd., Chengdu Liaison Office
Rm. 2401, 24th Floor,
Ming Xing Financial Tower
No. 88 TIDU Street
Chengdu 610016, China
Tel: 86-28-86766200 Fax: 86-28-86766599

China - Fuzhou
Microchip Technology Consulting (Shanghai) Co., Ltd., Fuzhou Liaison Office
Unit 28F, World Trade Plaza
No. 71 Wusi Road
Fuzhou 350001, China
Tel: 86-591-7503506 Fax: 86-591-7503521

China - Shanghai
Microchip Technology Consulting (Shanghai) Co., Ltd.
Room 701, Bldg. B
Far East International Plaza
No. 317 Xian Xia Road
Shanghai, 200051
Tel: 86-21-6275-5700 Fax: 86-21-6275-5060

China - Shenzhen
Microchip Technology Consulting (Shanghai) Co., Ltd., Shenzhen Liaison Office
Rm. 1315, 13/F, Shenzhen Kerry Centre,
Renminnan Lu
Shenzhen 518001, China
Tel: 86-755-2350361 Fax: 86-755-2366086

China - Hong Kong SAR
Microchip Technology Hongkong Ltd.
Unit 901-6, Tower 2, Metroplaza
223 Hing Fong Road
Kwai Fong, N.T., Hong Kong
Tel: 852-2401-1200 Fax: 852-2401-3431

India
Microchip Technology Inc.
India Liaison Office
Divyasree Chambers
1 Floor, Wing A (A3/A4)
No. 11, O'Shaugnessey Road
Bangalore, 560 025, India
Tel: 91-80-2290061 Fax: 91-80-2290062

Japan
Microchip Technology Japan K.K.
Benex S-1 6F
3-18-20, Shinyokohama
Kohoku-Ku, Yokohama-shi
Kanagawa, 222-0033, Japan
Tel: 81-45-471- 6166 Fax: 81-45-471-6122

Korea
Microchip Technology Korea
168-1, Youngbo Bldg. 3 Floor
Samsung-Dong, Kangnam-Ku
Seoul, Korea 135-882
Tel: 82-2-554-7200 Fax: 82-2-558-5934

Singapore
Microchip Technology Singapore Pte Ltd.
200 Middle Road
#07-02 Prime Centre
Singapore, 188980
Tel: 65-6334-8870 Fax: 65-6334-8850

Taiwan
Microchip Technology (Barbados) Inc.,
Taiwan Branch
11F-3, No. 207
Tung Hua North Road
Taipei, 105, Taiwan
Tel: 886-2-2717-7175 Fax: 886-2-2545-0139

EUROPE

Denmark
Microchip Technology Nordic ApS
Regus Business Centre
Lautrup hoj 1-3
Ballerup DK-2750 Denmark
Tel: 45 4420 9895 Fax: 45 4420 9910

France
Microchip Technology SARL
Parc d'Activite du Moulin de Massy
43 Rue du Saule Trapu
Batiment A - ler Etage
91300 Massy, France
Tel: 33-1-69-53-63-20 Fax: 33-1-69-30-90-79

Germany
Microchip Technology GmbH
Gustav-Heinemann Ring 125
D-81739 Munich, Germany
Tel: 49-89-627-144 0 Fax: 49-89-627-144-44

Italy
Microchip Technology SRL
Centro Direzionale Colleoni
Palazzo Taurus 1 V. Le Colleoni 1
20041 Agrate Brianza
Milan, Italy
Tel: 39-039-65791-1 Fax: 39-039-6899883

United Kingdom
Microchip Ltd.
505 Eskdale Road
Winnersh Triangle
Wokingham
Berkshire, England RG41 5TU
Tel: 44 118 921 5869 Fax: 44-118 921-5820

Austria
Microchip Technology Austria GmbH
Durisolstrasse 2
A-4600 Wels
Austria
Tel: 43-7242-2244-399
Fax: 43-7242-2244-393

05/16/02

© 2002 Microchip Technology Inc.