TC1173

300mA CMOS LDO with Shutdown ERROR Output and Bypass

Features

- Extremely Low Supply Current for Longer Battery Life
- Very Low Dropout Voltage
- 300mA Output Current
- Standard or Custom Output Voltages
- ERROR Output Can Be Used as a Low Battery Detector or Processor Reset Generator
- Power Saving Shutdown Mode
- Bypass Input for Ultra Quiet Operation
- Over Current and Over Temperature Protection
- Space-Saving MSOP Package Option

Applications

- Battery Operated Systems
- Portable Computers
- Medical Instruments
- Instrumentation
- Cellular/GSM/PHS Phones
- Linear Post-Regulators for SMPS
- Pagers

Device Selection Table

Part Number	Package	Junction Temp. Range
TC1173-xxVOA	8-Pin SOIC	-40°C to +125°C
TC1173-xxVUA	8-Pin MSOP	-40°C to +125°C

NOTE: xx indicates output voltages

Available Output Voltages: 2.5, 2.8, 3.0, 3.3, 5.0.

Other output voltages are available. Please contact Microchip Technology Inc. for details.

General Description

The TC1173 is a precision output (typically ±0.5%) CMOS low dropout regulator. Total supply current is typically 50μA at full load (20 to 60 times lower than in bipolar regulators).

TC1173 key features include ultra low noise operation (plus optional Bypass input); very low dropout voltage (typically 240mV at full load) and internal feed-forward compensation for fast response to step changes in load. An error output (ERROR) is asserted when the TC1173 is out-of-regulation (due to a low input voltage or excessive output current). ERROR can be set as a low battery warning or as a processor RESET signal (with the addition of an external RC network). Supply current is reduced to 0.05μA (typical) and VOUT and ERROR fall to zero when the shutdown input is low.

The TC1173 incorporates both over temperature and over current protection. The TC1173 is stable with an output capacitor of only 1μF and has a maximum output current of 300mA.

Typical Application

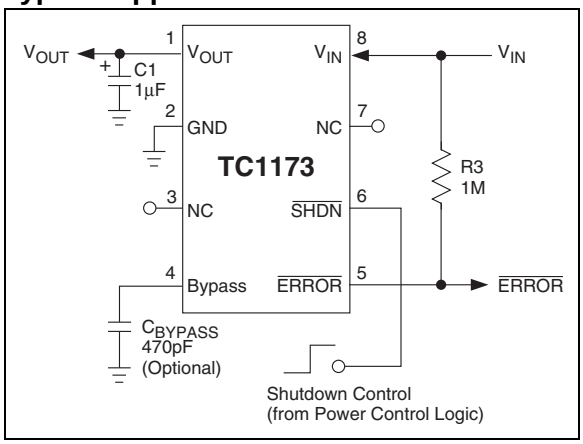

Package Type

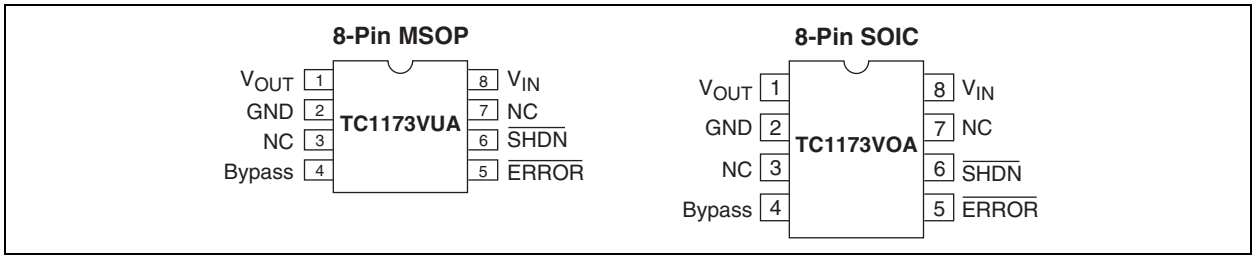

© 2002-2012 Microchip Technology Inc.

1.0 ELECTRICAL CHARACTERISTICS

Absolute Maximum Ratings*

Input Voltage 6.5V
Output Voltage.....(V_{SS} – 0.3V) to (V_{IN} + 0.3V)
Power Dissipation.....Internally Limited **(Note 6)**
Maximum Voltage on Any Pin .....V_{IN} +0.3V to -0.3V
Operating Temperature Range.....-40°C < T_J < 125°C
Storage Temperature.....-65°C to +150°C

Stresses above those listed under "Absolute Maximum Ratings" may cause permanent damage to the device. These are stress ratings only and functional operation of the device at these or any other conditions above those indicated in the operation sections of the specifications is not implied. Exposure to Absolute Maximum Rating conditions for extended periods may affect device reliability.

TC1173 ELECTRICAL SPECIFICATIONS

Electrical Characteristics: $V_{IN} = V_{OUT} + 1V$, $I_L = 0.1mA$, $C_L = 3.3\mu F$, $\overline{SHDN} > V_{IH}$, $T_A = 25°C$, unless otherwise noted. **Boldface** type specifications apply for junction temperatures of -40°C to +125°C.

Symbol	Parameter	Min	Typ	Max	Units	Test Conditions
V_{IN}	Input Operating Voltage	**2.7**	—	**6.0**	V	**Note 8**
I_{OUTMAX}	Maximum Output Current	**300**	—	—	mA	
V_{OUT}	Output Voltage	— **V_R – 2.5%**	V_R ±0.5% —	— **V_R + 2.5%**	V	**Note 1**
$\Delta V_{OUT}/\Delta T$	V_{OUT} Temperature Coefficient	—	**40**	—	ppm/°C	**Note 2**
$\Delta V_{OUT}/\Delta V_{IN}$	Line Regulation	—	0.05	**0.35**	%	$(V_R + 1V) \le V_{IN} \le 6V$
$\Delta V_{OUT}/V_{OUT}$	Load Regulation	—	0.5	**2.0**	%	$I_L = 0.1mA$ to I_{OUTMAX} **(Note 3)**
V_{IN}-V_{OUT}	Dropout Voltage	— — —	20 80 240	**30** **160** **480**	mV	$I_L = 0.1mA$ $I_L = 100mA$ $I_L = 300mA$ **(Note 4)**
I_{SS1}	Supply Current	—	50	**90**	µA	$\overline{SHDN} = V_{IH}$,
I_{SS2}	Shutdown Supply Current	—	0.05	0.5	µA	$\overline{SHDN} = 0V$
PSRR	Power Supply Rejection Ratio	—	60	—	dB	$F_{RE} \le 1kHz$
I_{OUTSC}	Output Short Circuit Current	—	550	650	mA	$V_{OUT} = 0V$
$\Delta V_{OUT}/\Delta P_D$	Thermal Regulation	—	0.04	—	V/W	**Note 5**
eN	Output Noise	—	260	—	nV/√Hz	F = 1kHz, $C_{OUT} = 1\mu F$, $R_{LOAD} = 50\Omega$
$\overline{SHDN}$ Input						
V_{IH}	$\overline{SHDN}$ Input High Threshold	**45**	—	—	%V_{IN}	
V_{IL}	$\overline{SHDN}$ Input Low Threshold	—	—	**15**	%V_{IN}	
$\overline{ERROR}$ Output						
V_{MIN}	Minimum Operating Voltage	1.0	—	—	V	
V_{OL}	Output Logic Low Voltage	—	—	**400**	mV	1 mA Flows to $\overline{ERROR}$
V_{TH}	$\overline{ERROR}$ Threshold Voltage	—	0.95 x V_R	—	V	
V_{OL}	$\overline{ERROR}$ Positive Hysteresis	—	50	—	mV	**Note 7**

Note 1: V_R is the user-programmed regulator output voltage setting.

2: TC $V_{OUT} = \dfrac{(V_{OUTMAX} - V_{OUTMIN}) \times 10^6}{V_{OUT} \times \Delta T}$

3: Regulation is measured at a constant junction temperature using low duty cycle pulse testing. Load regulation is tested over a load range from 0.1mA to the maximum specified output current. Changes in output voltage due to heating effects are covered by the thermal regulation specification.

4: Dropout voltage is defined as the input to output differential at which the output voltage drops 2% below its nominal value measured at a 1V differential.

5: Thermal Regulation is defined as the change in output voltage at a time T after a change in power dissipation is applied, excluding load or line regulation effects. Specifications are for a current pulse equal to I_{LMAX} at $V_{IN} = 6V$ for T = 10 msec.

6: The maximum allowable power dissipation is a function of ambient temperature, the maximum allowable junction temperature and the thermal resistance from junction-to-air (i.e., T_A, T_J, θ_{JA}). Exceeding the maximum allowable power dissipation causes the device to initiate thermal shutdown. Please see Section 4.0 Thermal Considerations for more details.

7: Hysteresis voltage is referenced by V_R.

8: The minimum V_{IN} has to justify the conditions: $V_{IN} \ge V_R + V_{DROPOUT}$ and $V_{IN} \ge 2.7V$ for $I_L = 0.1mA$ to I_{OUTMAX}.

© 2002-2012 Microchip Technology Inc.

2.0 PIN DESCRIPTIONS

The descriptions of the pins are listed in Table 2-1.

TABLE 2-1: PIN FUNCTION TABLE

Pin No. (8-Pin SOIC) (8-Pin MSOP)	Symbol	Description
1	V_{OUT}	Regulated voltage output.
2	GND	Ground terminal.
3	NC	No connect.
4	Bypass	Reference bypass input. Connecting a 470pF to this input further reduces output noise.
5	$\overline{\text{ERROR}}$	Out-of-Regulation Flag. (Open drain output). This output goes low when V_{OUT} is out-of-tolerance by approximately – 5%.
6	$\overline{\text{SHDN}}$	Shutdown control input. The regulator is fully enabled when a logic high is applied to this input. The regulator enters shutdown when a logic low is applied to this input. During shutdown, output voltage falls to zero and supply current is reduced to 0.05μA (typical).
7	NC	No connect.
8	V_{IN}	Unregulated supply input.

© 2002-2012 Microchip Technology Inc.

3.0 DETAILED DESCRIPTION

The TC1173 is a fixed output, low drop-out regulator. Unlike bipolar regulators, the TC1173's supply current does not increase with load current. In addition, V_{OUT} remains stable and within regulation over the entire 0mA to I_{OUTMAX} operating load current range, (an important consideration in RTC and CMOS RAM battery back-up applications).

Figure 3-1 shows a typical application circuit. The regulator is enabled any time the shutdown input ($\overline{SHDN}$) is at or above V_{IH}, and shutdown (disabled) when $\overline{SHDN}$ is at or below V_{IL}. $\overline{SHDN}$ may be controlled by a CMOS logic gate, or I/O port of a microcontroller. If the $\overline{SHDN}$ input is not required, it should be connected directly to the input supply. While in shutdown, supply current decreases to 0.05µA (typical), V_{OUT} falls to zero and $\overline{ERROR}$ is disabled.

FIGURE 3-1: TYPICAL APPLICATION CIRCUIT

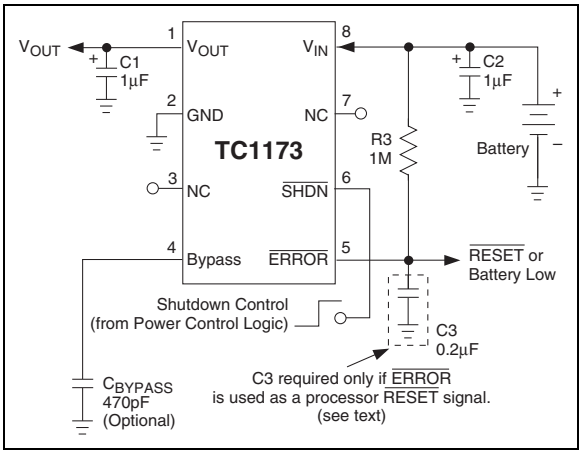

3.1 $\overline{ERROR}$ Output

$\overline{ERROR}$ is driven low whenever V_{OUT} falls out of regulation by more than – 5% (typical). This condition may be caused by low input voltage, output current limiting, or thermal limiting. The $\overline{ERROR}$ threshold is 5% below rated V_{OUT} regardless of the programmed output voltage value (e.g., $\overline{ERROR}$ = V_{OL} at 4.75V (typ.) for a 5.0V regulator and 2.85V (typ.) for a 3.0V regulator). $\overline{ERROR}$ output operation is shown in Figure 3-2.

Note that $\overline{ERROR}$ is active when V_{OUT} is at or below V_{TH}, and inactive when V_{OUT} is above V_{TH} + V_H.

As shown in Figure 3-1, $\overline{ERROR}$ can be used as a battery low flag, or as a processor $\overline{RESET}$ signal (with the addition of timing capacitor C3). R1 x C3 should be chosen to maintain $\overline{ERROR}$ below V_{IH} of the processor $\overline{RESET}$ input for at least 200 msec to allow time for the system to stabilize. Pull-up resistor R1 can be tied to V_{OUT}, V_{IN} or any other voltage less than (V_{IN} + 0.3V).

FIGURE 3-2: $\overline{ERROR}$ OUTPUT OPERATION

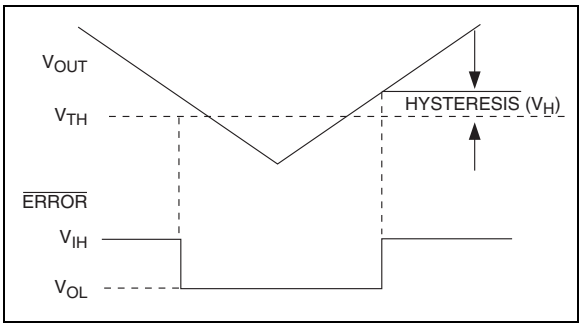

3.2 Output Capacitor

A 1µF (min) capacitor from V_{OUT} to ground is recommended. The output capacitor should have an effective series resistance greater than 0.1Ω and less than 5.0Ω. A 1µF capacitor should be connected from V_{IN} to GND if there is more than 10 inches of wire between the regulator and the AC filter capacitor, or if a battery is used as the power source. Aluminum electrolytic or tantalum capacitor types can be used. (Since many aluminum electrolytic capacitors freeze at approximately -30°C, solid tantalums are recommended for applications operating below -25°C.) When operating from sources other than batteries, supply-noise rejection and transient response can be improved by increasing the value of the input and output capacitors and employing passive filtering techniques.

3.3 Bypass Input

A 470pF capacitor connected from the Bypass input to ground reduces noise present on the internal reference, which in turn significantly reduces output noise. If output noise is not a concern, this input may be left unconnected. Larger capacitor values may be used, but results in a longer time period to rated output voltage when power is initially applied.

© 2002-2012 Microchip Technology Inc.

4.0 THERMAL CONSIDERATIONS

4.1 Thermal Shutdown

Integrated thermal protection circuitry shuts the regulator off when die temperature exceeds 150°C. The regulator remains off until the die temperature drops to approximately 140°C.

4.2 Power Dissipation

The amount of power the regulator dissipates is primarily a function of input and output voltage, and output current. The following equation is used to calculate worst case actual power dissipation:

EQUATION 4-1:

$$P_D \approx (V_{INMAX} - V_{OUTMIN})I_{LOADMAX}$$

Where:

P_D = Worst case actual power dissipation
V_{INMAX} = Maximum voltage on V_{IN}
V_{OUTMIN} = Minimum regulator output voltage
$I_{LOADMAX}$ = Maximum output (load) current

The maximum allowable power dissipation (Equation 4-2) is a function of the maximum ambient temperature (T_{AMAX}), the maximum allowable die temperature (T_{JMAX}) and the thermal resistance from junction-to-air (θ_{JA}). The 8-Pin SOIC package has a θ_{JA} of approximately 160°C/Watt, while the 8-Pin MSOP package has a θ_{JA} of approximately 200°C/Watt.

EQUATION 4-2:

$$P_{DMAX} = \frac{(T_{JMAX} - T_{AMAX})}{\theta_{JA}}$$

Where all terms are previously defined.

Equation 4-1 can be used in conjunction with Equation 4-2 to ensure regulator thermal operation is within limits. For example:

Given:

V_{INMAX} = 3.0V ± 10%
V_{OUTMIN} = 2.7V ± 0.5%
$I_{LOADMAX}$ = 250mA
T_{JMAX} = 125°C
T_{AMAX} = 55°C
θ_{JA} = 200°C/W
8-Pin MSOP Package

Find: 1. Actual power dissipation
2. Maximum allowable dissipation

Actual power dissipation:

$$P_D \approx (V_{INMAX} - V_{OUTMIN})I_{LOADMAX}$$
$$= [(3.0 \times 1.1) - (2.7 \times .995)]250 \times 10^{-3}$$
$$= 155mW$$

Maximum allowable power dissipation:

$$P_{DMAX} = \frac{(T_{JMAX} - T_{AMAX})}{\theta_{JA}}$$
$$= \frac{(125 - 55)}{200}$$
$$= 350mW$$

In this example, the TC1173 dissipates a maximum of 155mW; below the allowable limit of 350mW. In a similar manner, Equation 4-1 and Equation 4-2 can be used to calculate maximum current and/or input voltage limits. For example, the maximum allowable V_{IN} is found by substituting the maximum allowable power dissipation of 250mW into Equation 4-1, from which V_{INMAX} = 4.1V.

4.3 Layout Considerations

The primary path of heat conduction out of the package is via the package leads. Therefore, layouts having a ground plane, wide traces at the pads, and wide power supply bus lines combine to lower θ_{JA} and therefore increase the maximum allowable power dissipation limit.

© 2002-2012 Microchip Technology Inc.

5.0 TYPICAL CHARACTERISTICS

Note: The graphs and tables provided following this note are a statistical summary based on a limited number of samples and are provided for informational purposes only. The performance characteristics listed herein are not tested or guaranteed. In some graphs or tables, the data presented may be outside the specified operating range (e.g., outside specified power supply range) and therefore outside the warranted range.

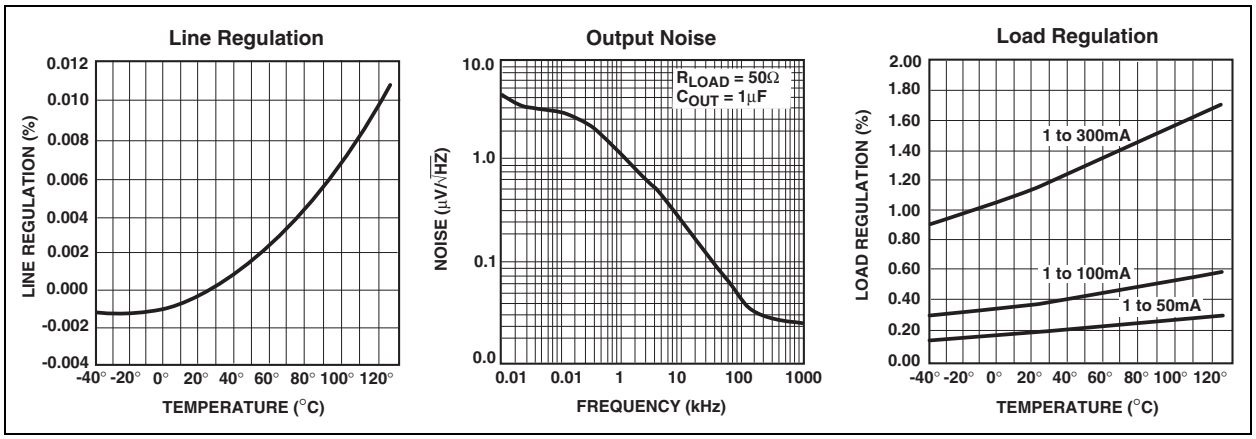

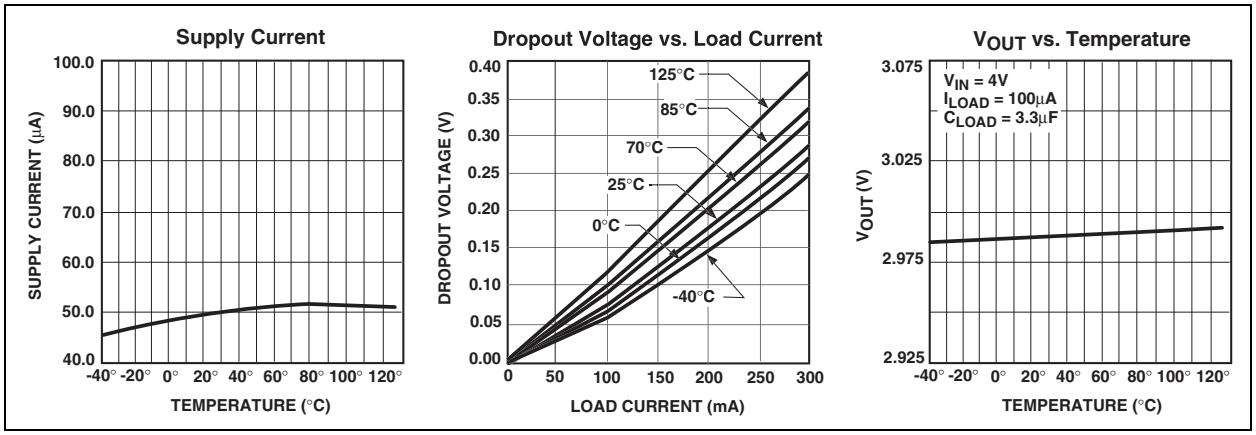

© 2002-2012 Microchip Technology Inc.

6.0 PACKAGING INFORMATION

6.1 Package Marking Information

Package marking data not available at this time.

6.2 Taping Form

Component Taping Orientation for 8-Pin MSOP Devices

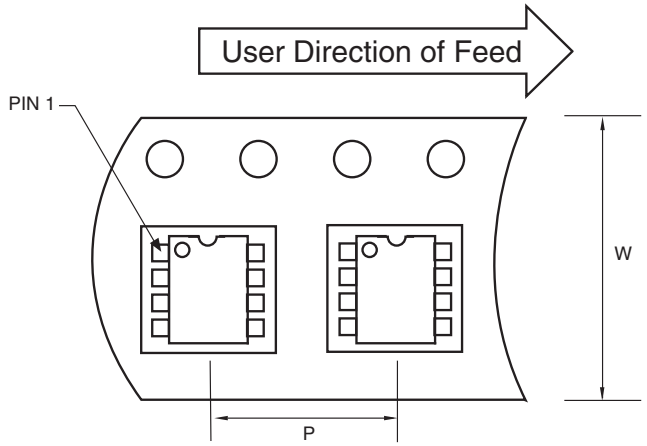

Standard Reel Component Orientation
for TR Suffix Device

Carrier Tape, Number of Components Per Reel and Reel Size

Package	Carrier Width (W)	Pitch (P)	Part Per Full Reel	Reel Size
8-Pin MSOP	12 mm	8 mm	2500	13 in

Component Taping Orientation for 8-Pin SOIC (Narrow) Devices

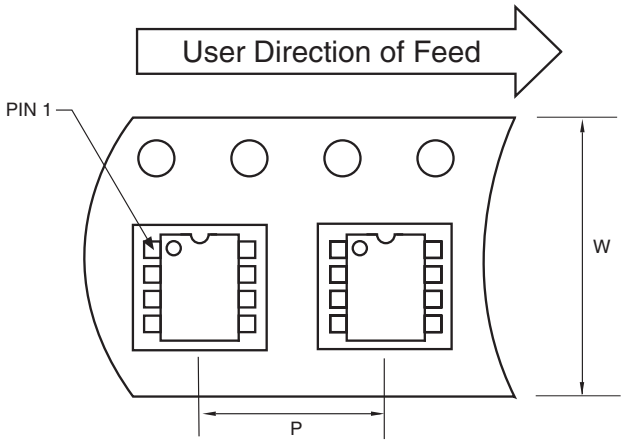

Standard Reel Component Orientation
for TR Suffix Device

Carrier Tape, Number of Components Per Reel and Reel Size

Package	Carrier Width (W)	Pitch (P)	Part Per Full Reel	Reel Size
8-Pin SOIC (N)	12 mm	8 mm	2500	13 in

6.3 Package Dimensions

Note: For the most current package drawings, please see the Microchip Packaging Specification located at http://www.microchip.com/packaging

8-Pin MSOP

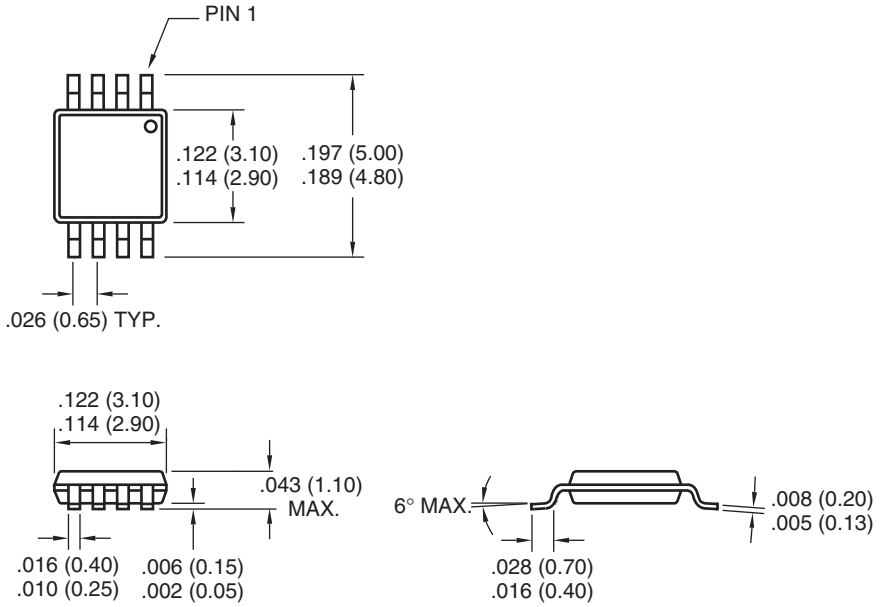

Dimensions: inches (mm)

© 2002-2012 Microchip Technology Inc.

Note: For the most current package drawings, please see the Microchip Packaging Specification located at http://www.microchip.com/packaging

8-Pin SOIC

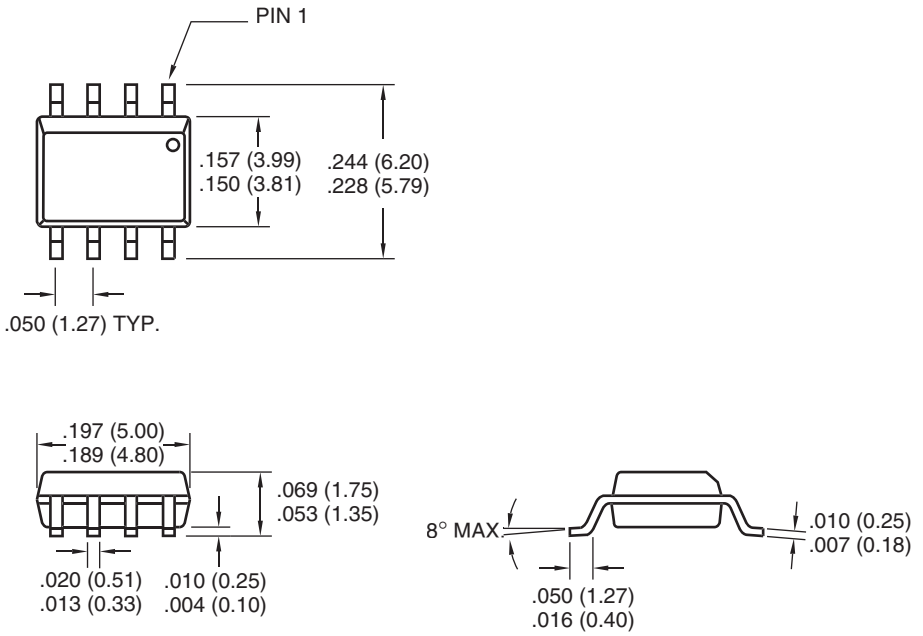

Dimensions: inches (mm)

REVISION HISTORY

Revision C (November 2012)

Added a note to each package outline drawing.

© 2002-2012 Microchip Technology Inc.

SALES AND SUPPORT

Data Sheets
Products supported by a preliminary Data Sheet may have an errata sheet describing minor operational differences and recommended workarounds. To determine if an errata sheet exists for a particular device, please contact one of the following:

1. Your local Microchip sales office
2. The Microchip Worldwide Site (www.microchip.com)

Please specify which device, revision of silicon and Data Sheet (include Literature #) you are using.

New Customer Notification System
Register on our web site (www.microchip.com/cn) to receive the most current information on our products.

© 2002-2012 Microchip Technology Inc.

NOTES:

© 2002-2012 Microchip Technology Inc.

Note the following details of the code protection feature on Microchip devices:

- Microchip products meet the specification contained in their particular Microchip Data Sheet.
- Microchip believes that its family of products is one of the most secure families of its kind on the market today, when used in the intended manner and under normal conditions.
- There are dishonest and possibly illegal methods used to breach the code protection feature. All of these methods, to our knowledge, require using the Microchip products in a manner outside the operating specifications contained in Microchip's Data Sheets. Most likely, the person doing so is engaged in theft of intellectual property.
- Microchip is willing to work with the customer who is concerned about the integrity of their code.
- Neither Microchip nor any other semiconductor manufacturer can guarantee the security of their code. Code protection does not mean that we are guaranteeing the product as "unbreakable."

Code protection is constantly evolving. We at Microchip are committed to continuously improving the code protection features of our products. Attempts to break Microchip's code protection feature may be a violation of the Digital Millennium Copyright Act. If such acts allow unauthorized access to your software or other copyrighted work, you may have a right to sue for relief under that Act.

Information contained in this publication regarding device applications and the like is provided only for your convenience and may be superseded by updates. It is your responsibility to ensure that your application meets with your specifications. MICROCHIP MAKES NO REPRESENTATIONS OR WARRANTIES OF ANY KIND WHETHER EXPRESS OR IMPLIED, WRITTEN OR ORAL, STATUTORY OR OTHERWISE, RELATED TO THE INFORMATION, INCLUDING BUT NOT LIMITED TO ITS CONDITION, QUALITY, PERFORMANCE, MERCHANTABILITY OR FITNESS FOR PURPOSE**.** Microchip disclaims all liability arising from this information and its use. Use of Microchip devices in life support and/or safety applications is entirely at the buyer's risk, and the buyer agrees to defend, indemnify and hold harmless Microchip from any and all damages, claims, suits, or expenses resulting from such use. No licenses are conveyed, implicitly or otherwise, under any Microchip intellectual property rights.

Trademarks

The Microchip name and logo, the Microchip logo, dsPIC, FlashFlex, KEELOQ, KEELOQ logo, MPLAB, PIC, PICmicro, PICSTART, PIC^{32} logo, rfPIC, SST, SST Logo, SuperFlash and UNI/O are registered trademarks of Microchip Technology Incorporated in the U.S.A. and other countries.

FilterLab, Hampshire, HI-TECH C, Linear Active Thermistor, MTP, SEEVAL and The Embedded Control Solutions Company are registered trademarks of Microchip Technology Incorporated in the U.S.A.

Silicon Storage Technology is a registered trademark of Microchip Technology Inc. in other countries.

Analog-for-the-Digital Age, Application Maestro, BodyCom, chipKIT, chipKIT logo, CodeGuard, dsPICDEM, dsPICDEM.net, dsPICworks, dsSPEAK, ECAN, ECONOMONITOR, FanSense, HI-TIDE, In-Circuit Serial Programming, ICSP, Mindi, MiWi, MPASM, MPF, MPLAB Certified logo, MPLIB, MPLINK, mTouch, Omniscient Code Generation, PICC, PICC-18, PICDEM, PICDEM.net, PICkit, PICtail, REAL ICE, rfLAB, Select Mode, SQI, Serial Quad I/O, Total Endurance, TSHARC, UniWinDriver, WiperLock, ZENA and Z-Scale are trademarks of Microchip Technology Incorporated in the U.S.A. and other countries.

SQTP is a service mark of Microchip Technology Incorporated in the U.S.A.

GestIC and ULPP are registered trademarks of Microchip Technology Germany II GmbH & Co. & KG, a subsidiary of Microchip Technology Inc., in other countries.

All other trademarks mentioned herein are property of their respective companies.

© 2002-2012, Microchip Technology Incorporated, Printed in the U.S.A., All Rights Reserved.

Printed on recycled paper.

ISBN: 9781620767375

QUALITY MANAGEMENT SYSTEM
CERTIFIED BY DNV
ISO/TS 16949

Microchip received ISO/TS-16949:2009 certification for its worldwide headquarters, design and wafer fabrication facilities in Chandler and Tempe, Arizona; Gresham, Oregon and design centers in California and India. The Company's quality system processes and procedures are for its PIC® MCUs and dsPIC® DSCs, KEELOQ® code hopping devices, Serial EEPROMs, microperipherals, nonvolatile memory and analog products. In addition, Microchip's quality system for the design and manufacture of development systems is ISO 9001:2000 certified.

Worldwide Sales and Service

AMERICAS

Corporate Office
2355 West Chandler Blvd.
Chandler, AZ 85224-6199
Tel: 480-792-7200
Fax: 480-792-7277
Technical Support:
http://www.microchip.com/support
Web Address:
www.microchip.com

Atlanta
Duluth, GA
Tel: 678-957-9614
Fax: 678-957-1455

Boston
Westborough, MA
Tel: 774-760-0087
Fax: 774-760-0088

Chicago
Itasca, IL
Tel: 630-285-0071
Fax: 630-285-0075

Cleveland
Independence, OH
Tel: 216-447-0464
Fax: 216-447-0643

Dallas
Addison, TX
Tel: 972-818-7423
Fax: 972-818-2924

Detroit
Farmington Hills, MI
Tel: 248-538-2250
Fax: 248-538-2260

Indianapolis
Noblesville, IN
Tel: 317-773-8323
Fax: 317-773-5453

Los Angeles
Mission Viejo, CA
Tel: 949-462-9523
Fax: 949-462-9608

Santa Clara
Santa Clara, CA
Tel: 408-961-6444
Fax: 408-961-6445

Toronto
Mississauga, Ontario,
Canada
Tel: 905-673-0699
Fax: 905-673-6509

ASIA/PACIFIC

Asia Pacific Office
Suites 3707-14, 37th Floor
Tower 6, The Gateway
Harbour City, Kowloon
Hong Kong
Tel: 852-2401-1200
Fax: 852-2401-3431

Australia - Sydney
Tel: 61-2-9868-6733
Fax: 61-2-9868-6755

China - Beijing
Tel: 86-10-8569-7000
Fax: 86-10-8528-2104

China - Chengdu
Tel: 86-28-8665-5511
Fax: 86-28-8665-7889

China - Chongqing
Tel: 86-23-8980-9588
Fax: 86-23-8980-9500

China - Hangzhou
Tel: 86-571-2819-3187
Fax: 86-571-2819-3189

China - Hong Kong SAR
Tel: 852-2401-1200
Fax: 852-2401-3431

China - Nanjing
Tel: 86-25-8473-2460
Fax: 86-25-8473-2470

China - Qingdao
Tel: 86-532-8502-7355
Fax: 86-532-8502-7205

China - Shanghai
Tel: 86-21-5407-5533
Fax: 86-21-5407-5066

China - Shenyang
Tel: 86-24-2334-2829
Fax: 86-24-2334-2393

China - Shenzhen
Tel: 86-755-8203-2660
Fax: 86-755-8203-1760

China - Wuhan
Tel: 86-27-5980-5300
Fax: 86-27-5980-5118

China - Xian
Tel: 86-29-8833-7252
Fax: 86-29-8833-7256

China - Xiamen
Tel: 86-592-2388138
Fax: 86-592-2388130

China - Zhuhai
Tel: 86-756-3210040
Fax: 86-756-3210049

ASIA/PACIFIC

India - Bangalore
Tel: 91-80-3090-4444
Fax: 91-80-3090-4123

India - New Delhi
Tel: 91-11-4160-8631
Fax: 91-11-4160-8632

India - Pune
Tel: 91-20-2566-1512
Fax: 91-20-2566-1513

Japan - Osaka
Tel: 81-66-152-7160
Fax: 81-66-152-9310

Japan - Yokohama
Tel: 81-45-471- 6166
Fax: 81-45-471-6122

Korea - Daegu
Tel: 82-53-744-4301
Fax: 82-53-744-4302

Korea - Seoul
Tel: 82-2-554-7200
Fax: 82-2-558-5932 or
82-2-558-5934

Malaysia - Kuala Lumpur
Tel: 60-3-6201-9857
Fax: 60-3-6201-9859

Malaysia - Penang
Tel: 60-4-227-8870
Fax: 60-4-227-4068

Philippines - Manila
Tel: 63-2-634-9065
Fax: 63-2-634-9069

Singapore
Tel: 65-6334-8870
Fax: 65-6334-8850

Taiwan - Hsin Chu
Tel: 886-3-5778-366
Fax: 886-3-5770-955

Taiwan - Kaohsiung
Tel: 886-7-213-7828
Fax: 886-7-330-9305

Taiwan - Taipei
Tel: 886-2-2508-8600
Fax: 886-2-2508-0102

Thailand - Bangkok
Tel: 66-2-694-1351
Fax: 66-2-694-1350

EUROPE

Austria - Wels
Tel: 43-7242-2244-39
Fax: 43-7242-2244-393

Denmark - Copenhagen
Tel: 45-4450-2828
Fax: 45-4485-2829

France - Paris
Tel: 33-1-69-53-63-20
Fax: 33-1-69-30-90-79

Germany - Munich
Tel: 49-89-627-144-0
Fax: 49-89-627-144-44

Italy - Milan
Tel: 39-0331-742611
Fax: 39-0331-466781

Netherlands - Drunen
Tel: 31-416-690399
Fax: 31-416-690340

Spain - Madrid
Tel: 34-91-708-08-90
Fax: 34-91-708-08-91

UK - Wokingham
Tel: 44-118-921-5869
Fax: 44-118-921-5820

10/26/12

© 2002-2012 Microchip Technology Inc.