DATA SHEET

TC3.5/1.8/1.8
Ferrite toroids

Supersedes data of September 2004 2008 Sep 01

FERROXCUBE
A YAGEO COMPANY

Ferrite toroids TC3.5/1.8/1.8

RING CORES (TOROIDS)

Effective core parameters

SYMBOL	PARAMETER	VALUE	UNIT
$\Sigma(l/A)$	core factor (C1)	5.31	mm^{-1}
V_e	effective volume	11.0	mm^3
l_e	effective length	7.65	mm
A_e	effective area	1.44	mm^2
m	mass of core	≈ 0.06	g

Coating

The cores are coated with parylene C, flame retardant in accordance with *"UL 94V-2"*; UL file number E 194397.
The coating is transparent.
Maximum operating temperature is 90 °C.

Isolation voltage

DC isolation voltage: 1000 V.
Contacts are applied on the edge of the ring core, which is also the critical point for the winding operation.

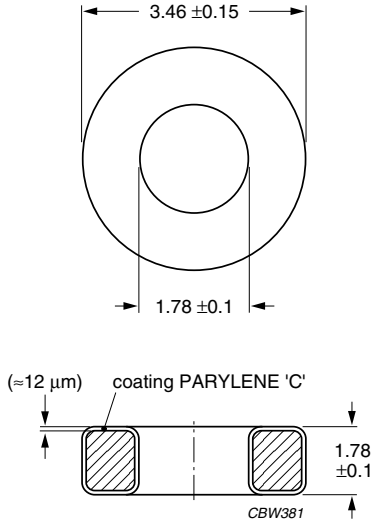

Dimensions (uncoated) in mm.

Fig.1 TC3.5/1.8/1.8 ring core.

Ring core data

GRADE	A_L (nH)	μ_i	TYPE NUMBER
3E28 des	950 ± 25%	≈ 4000	TC3.5/1.8/1.8-3E28

DATA SHEET STATUS DEFINITIONS

DATA SHEET STATUS	PRODUCT STATUS	DEFINITIONS
Preliminary specification	Development	This data sheet contains preliminary data. Ferroxcube reserves the right to make changes at any time without notice in order to improve design and supply the best possible product.
Product specification	Production	This data sheet contains final specifications. Ferroxcube reserves the right to make changes at any time without notice in order to improve design and supply the best possible product.

DISCLAIMER

Life support applications — These products are not designed for use in life support appliances, devices, or systems where malfunction of these products can reasonably be expected to result in personal injury. Ferroxcube customers using or selling these products for use in such applications do so at their own risk and agree to fully indemnify Ferroxcube for any damages resulting from such application.

PRODUCT STATUS DEFINITIONS

STATUS	INDICATION	DEFINITION
Prototype	prot	These are products that have been made as development samples for the purposes of technical evaluation only. The data for these types is provisional and is subject to change.
Design-in	des	These products are recommended for new designs.
Preferred		These products are recommended for use in current designs and are available via our sales channels.
Support	sup	These products are **not** recommended for new designs and may not be available through all of our sales channels. Customers are advised to check for availability.