TAI-SAW TECHNOLOGY CO., LTD.

No. 3, Industrial 2nd Rd., Ping-Chen Industrial District,
Taoyuan, 324, Taiwan, R.O.C.
TEL: 886-3-4690038 FAX: 886-3-4697532
E-mail: tstsales@mail.taisaw.com Web: www.taisaw.com

Approval Sheet For Product Specification

Issued Date:

Product Name: SAW Resonator 907.2 MHz SMD 3.8X3.8 mm

TST Parts No.: TC0315A

Customer Parts No.:_____

Company:_____

Division:_____

Approved by :_____

Date:_____

Checked by: Asin Lin

Approval by: Francis Chen

Date: 2006/01/13

TAI-SAW TECHNOLOGY CO., LTD.

No. 3, Industrial 2nd Rd., Ping-Chen Industrial District,
Taoyuan, 324, Taiwan, R.O.C.
TEL: 886-3-4690038 FAX: 886-3-4697532
E-mail: tstsales@mail.taisaw.com Web: www.taisaw.com

SAW Resonator 907.2 MHz

MODEL NO.: TC0315A REV. NO.:1

RoHS Compliant
Lead free
Lead-free soldering

A. FEATURES:

1. 1-Port Resonator.

B. MAXIMUM RATING:

1.Input Power Level: 0 dBm

2.DC voltage: 12 V

3.Operating Temperature: -40°C to +85°C

4.Storage Temperature: -40°C to +85°C

C. ELECTRICAL CHARACTERISTICS:

Characteristic	Units	Minimum	Typical	Maximum
Center frequency **Fr**	**MHz**	907.075	907.2	907.325
Insertion Loss **IL**	**dB**		1.4	2.3
Unloaded Quality factor		-	8870	-
Equivalent Elements				
Motional capacitance **C1**	**fF**	-	1.01	-
Motional inductance **L1**	**μH**	-	30.5	-
Motional resistance **R1**	**Ohm**	-	19.6	-
Parallel capacitance **Co**	**pF**	-	2.12	-
Temp.coeff.	**ppm/c*2**	-	0.032	-
Turnover To	**deg.C**	-	25	-
Package size		SMD 3.8X3.8X1.4mm		

D.EQUVIRENT CIRCUIT:

One-Port Resonator:

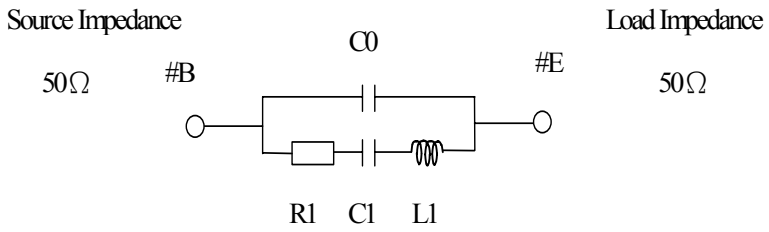

E.FREQUENCY CHARACTERISTICS:

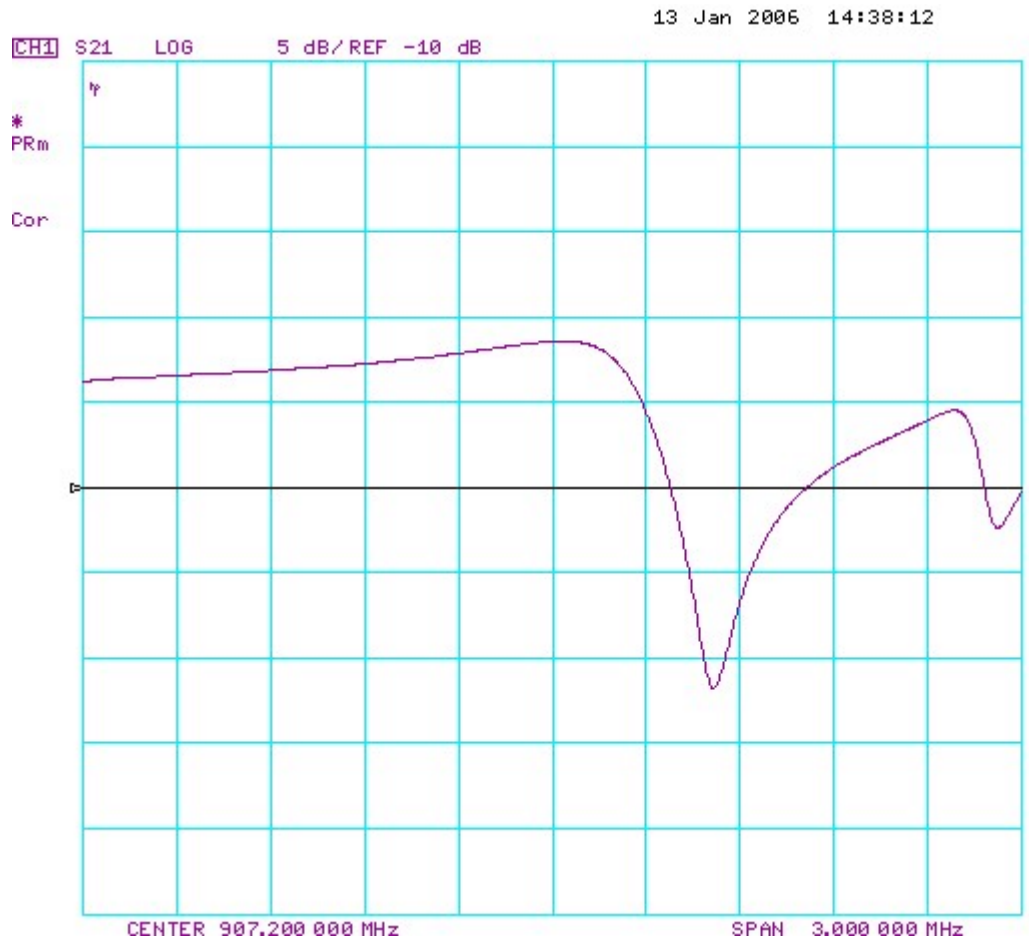

F. TEST CIRCUIT:

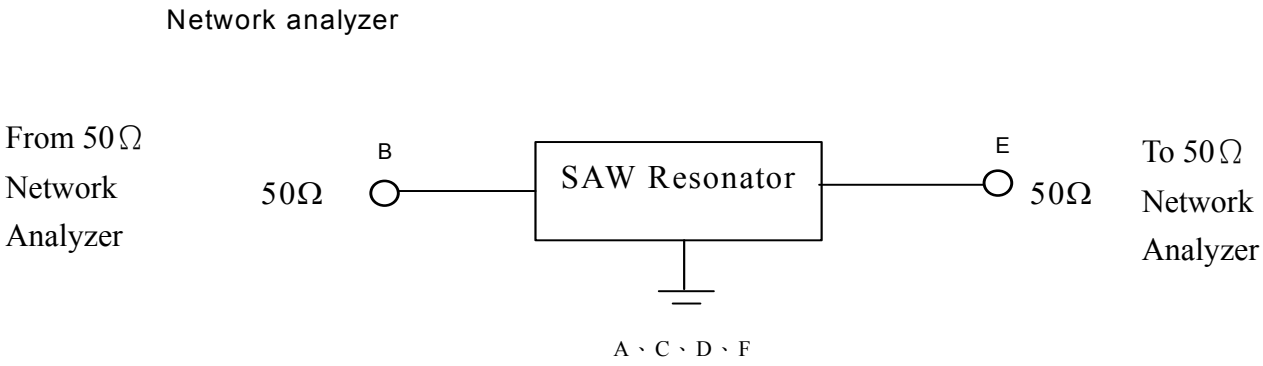

G.OUTLINE DRAWING:

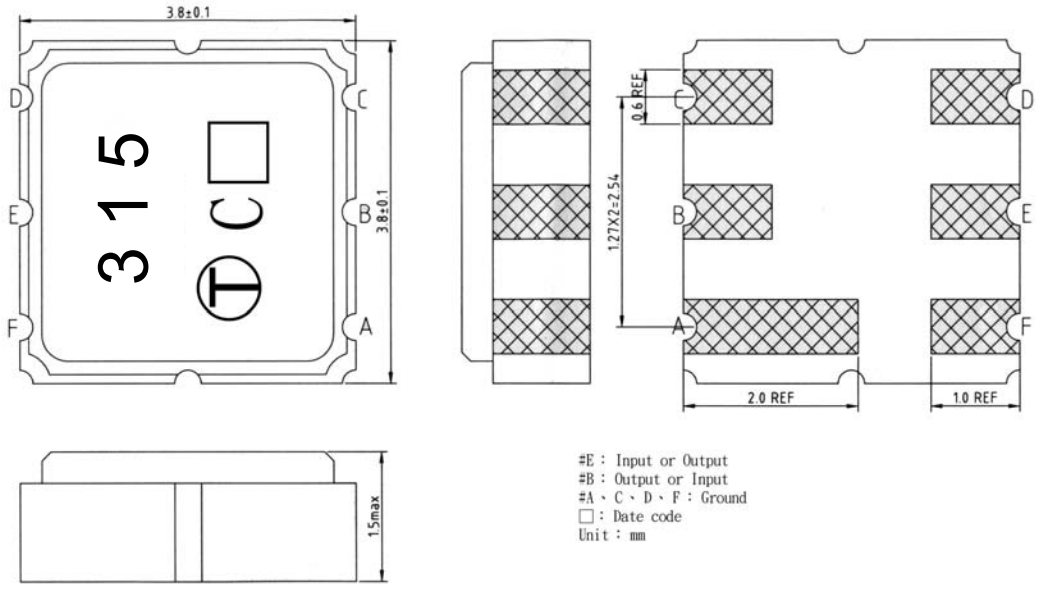

□ Date code: Provided by planer each year

Product Year Code

Year	2001 2003 2005 .	2002 2004 2006 .
Product Code	C	c

H. PCB FOOTPRINT:

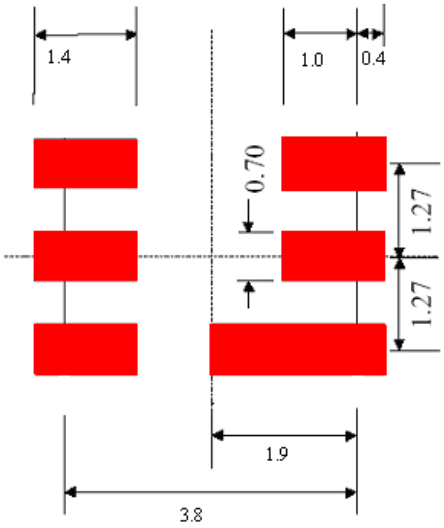

I. PACKING:

1.REEL DIMENSION

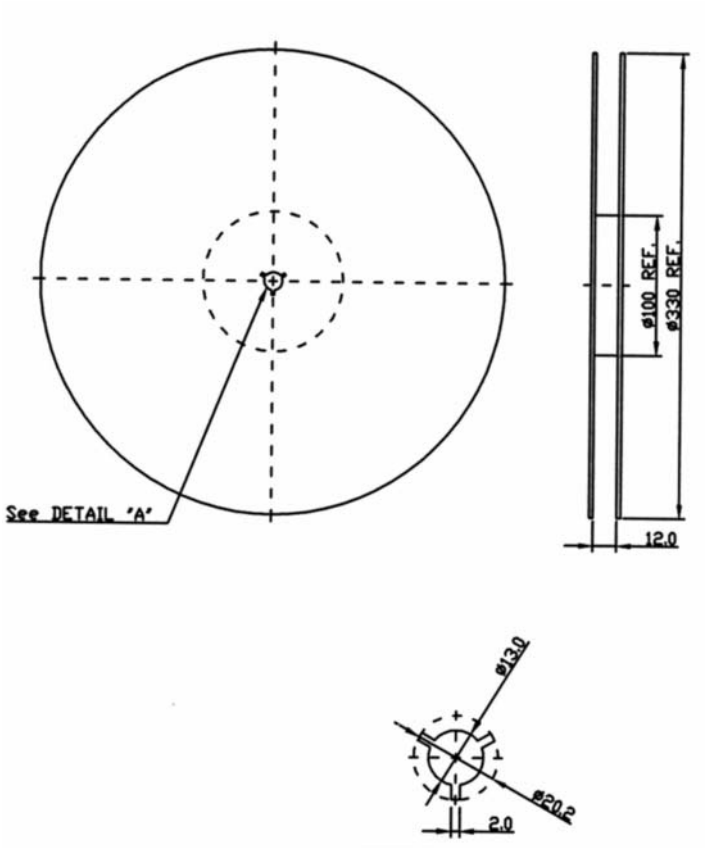

2. TAPE DIMENSION

