SURE STAR COMPUTER CO., LTD

No. 2-1, Daan Road, Shulin Dist., New Taipei City 238, Taiwan

E-mail: info@surestar.com.tw Tel: +886 2 2682 2505

http: //www.surestar.com.tw Fax: +886 2 2682 2515

1U Redundant Power Supply

Model No. TC-400R2UH

Revision: A1

Table of content

1. Introduction.....2

2. Specification

2.1 Input Voltage.....2

2.2 DC Output.....2

2.3 PS-ON (Remote ON/OFF).....3

2.4 PW-OK(power good signal).....3

2.5 Efficiency.....3

2.6 Hold-Up Time.....3

3. PROTECTION

3.1 Over Voltage protection.....3

3.2 Short Circuit Protection.....3

3.3 Over Power Protection.....4

3.4 No Load operation.....4

4. Environment Temperature.....4

5. Reliability.....4

6. Agency approvals.....4

7. EMI/RFI.....4

8. Instructions.....4

9. HOT-SWAP Procedures.....5

10. Dimension.....5

11. PINOUTS of connectors.....7

Color Reference for LED cable.....7

Main Power Connector.....7

1. Introduction

The 400R2UH Series products of **Hot-Swap & Power Sharing** redundant Power supply provides increased reliability when integrated a variety of Systems. The 400R2UH series is ideally suited to telecommunications and Industrial system, as well as a variety of other applications where system Never shut down i. E. Zero down time.

400R2UH series redundant power supply, it consists of

* One of passive Back plane.
* One of exothermal enclosure.
* Two of compact size power modules with Hot-Pluggable connector
* Screw package.
* Alarm reset bottom.

◎**Features**

* 1U Size design.
* Hot-Swappable & Power Sharing capability.
* Full Range AC input.
* Active PFC meet

2. Specification

2.1 AC Input Voltage: 100 to 240VAC, Frequency: 47Hz~63 Hz.

2.2 DC Output: 400W maximum

VOLTAGE	+5V	+12V	+3.3V	-12V	-5V	+5Vsb
MAX. LOAD	25A	28A	25A	0.8A	0.5A	2A
MIN. LOAD	3A	2A	0.3A	0.1A	0.1A	0.1A
REGULATION	± 5%	± 5%	± 5%	±10%	±10%	± 5%
RIPPLE(mV)	50	120	50	120	100	50

Note:

1. The combined total power from +5V and +3.3V shall not exceed 40A. The combined total power from +5V and +3.3V & +12V shall not exceed 378W
2. Noise Test – Noise bandwidth is from DC to 20 MHz.
3. Ripple frequencies greater than 1MHz shall be attenuated by the measurement System.
4. Add 0.1uF/10uF capacitor at output connector terminals for ripple and noise measurements.

2.3 **PS-ON**

Remote On/Off Control:

When PS-ON is pulled to TTL Low, the DC output is to be enabled.

When PS-OFF is pulled to TTL high, the DC output is to be disabled.

2.4 **PW-OK**

PW-OK is power good signal and should be asserted high by the power supply to indicate that +5VDC and +3.3VDC output are above the under voltage thresholds of the power supply TTL. compatible signal out with 100ms to 500ms.

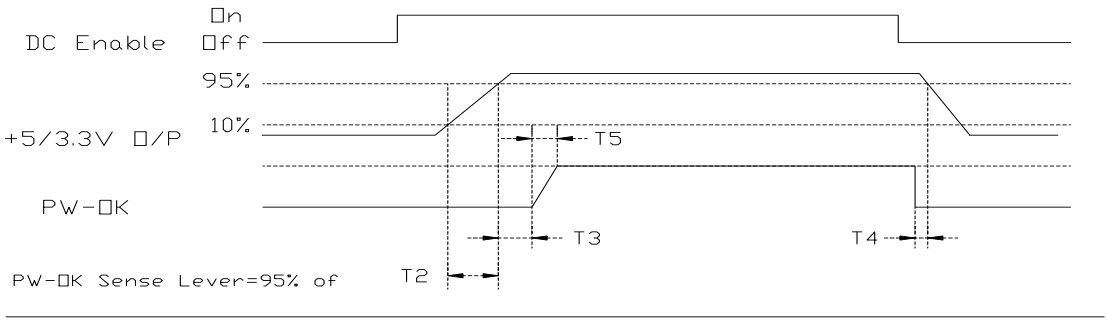

Timing of PS-ON, PW-OK, and Germane Voltage Rails

Although there is no requirement to meet specific timing parameters,

The following signal timings are recommended:

2ms≦T2≦200ms

100ms≦T3≦500ms

T4＞1ms

T5≦10ms

2.5 Efficiency: ≧ 73% at full load. (Normal Line)

2.6 Hold-Up Time: 16ms at maximum load & normal input voltage.

3. PROTECTIONS

3.1 OVER-VOLTAGE PROTECTION

Standard on +5.0V output, set at 6.25VDC ± 075VDC.

3.2 SHORT CIRCUIT PROTECTION

A short circuit placed between the DC Return and the output shall cause No damage and the power supply shall shutdown.

3.3 OVER POWER PROTECTION

The power supply shall shut down when output power exceeds 130% to 160% of full load and require a power on cycle be performed by the operate.

3.4 NO LOAD OPERATION

No parts shall be damaged on the power supply.

4. ENVIRONMENT TEMPERATURE

4.1 Operation Temperature: 0℃ to 40℃

4.2 Cooling: By forced air

4.3 Storage Temperature:-20℃ to 70℃

4.4 Humidity: 5 to 90% non-condensing.

5. RELIABILITY

5.1 MTBF OF POWER SUPPLY ELECTRONIS

100,000 hours at full load and 25℃ ambient temperature

5.2 LIFE EXPECTANCY OF FAN

40,000 hours at 40℃

6. AGENCY APPROVALS

UL 60950-1, 2nd Edition

TUV (EN60950-1: 2006+A11+A1+A12)

IEC 60950-1: 2005+A1

C-Tick AS/NS CISPR 22: 2006 (Class A) / CISPR 22: 2008 (Ed 6.0)

BSMI CNS14336-1, CNS13438

7. EMI /RFI

FCC part 15, Class A (Verification) IC ICES-003

EN55022 : 2006+A1: 2007 (Class A)

EN55024 : 1998+A1: 2001+A2: 2003

EN61000-3-2: 2006

EN61000-3-2: 2008

IEC61000-4-2, -3, -4, -5, -6, -8, -11

8. INSTRUCTIONS

The set still works properly even if either unit is removed. The removed unit can't be used in other machinery nor for other purpose. When one unit breaks down, it's LED will blink, buzzer will sound. Push the Reset button and buzzer will stop.

REDUNDANCY Offer redundant function for power system and mutually backs up the outputs. A zero transfer time when backup takes place.

HOT-SWAP	The power system provides a Hot-Swap function. This means when either one of the redundant power supplies fails or reaks down, you can easily replace failed unit without any interference to the system.
BUZZER	A warning buzzer sounds when any one of the power supplies fails. The warning buzzer is reset table from reset switch either the one in front control panel or the one on the rear side.
LED'S	The warning LED'S can be found either on the rear side or the control panel of the power system. Tells if one of the two power supplies has failed, by LED blinking.
HOT-PLUGGABLE	The power system provides a Hot-Pluggable function This method allows the power units in the Disk Array/ File Server to be removed or inserted very easily without

9. HOT-SWAP PROCEDURES

Please refer to the followings when either one power supply unit is fount defective.

A) Locate the defective power supply by examining the individual LED on the power unit or the LED on the front control panel if LED is Blinking.

B) Unlock & Remove the defective power supply unit.

C) Replace a new GOOD power supply unit, Insert the power supply into the power system chassis in position & it will auto Lock-up.

D) Turn on the new power supply unit.

E) Check the module LED which indicate the power and LED of total power system status, Both LED shall Have steady life.

10. DIMENSION

TC-XXXR2UH L 280 x W170 x H 42 mm

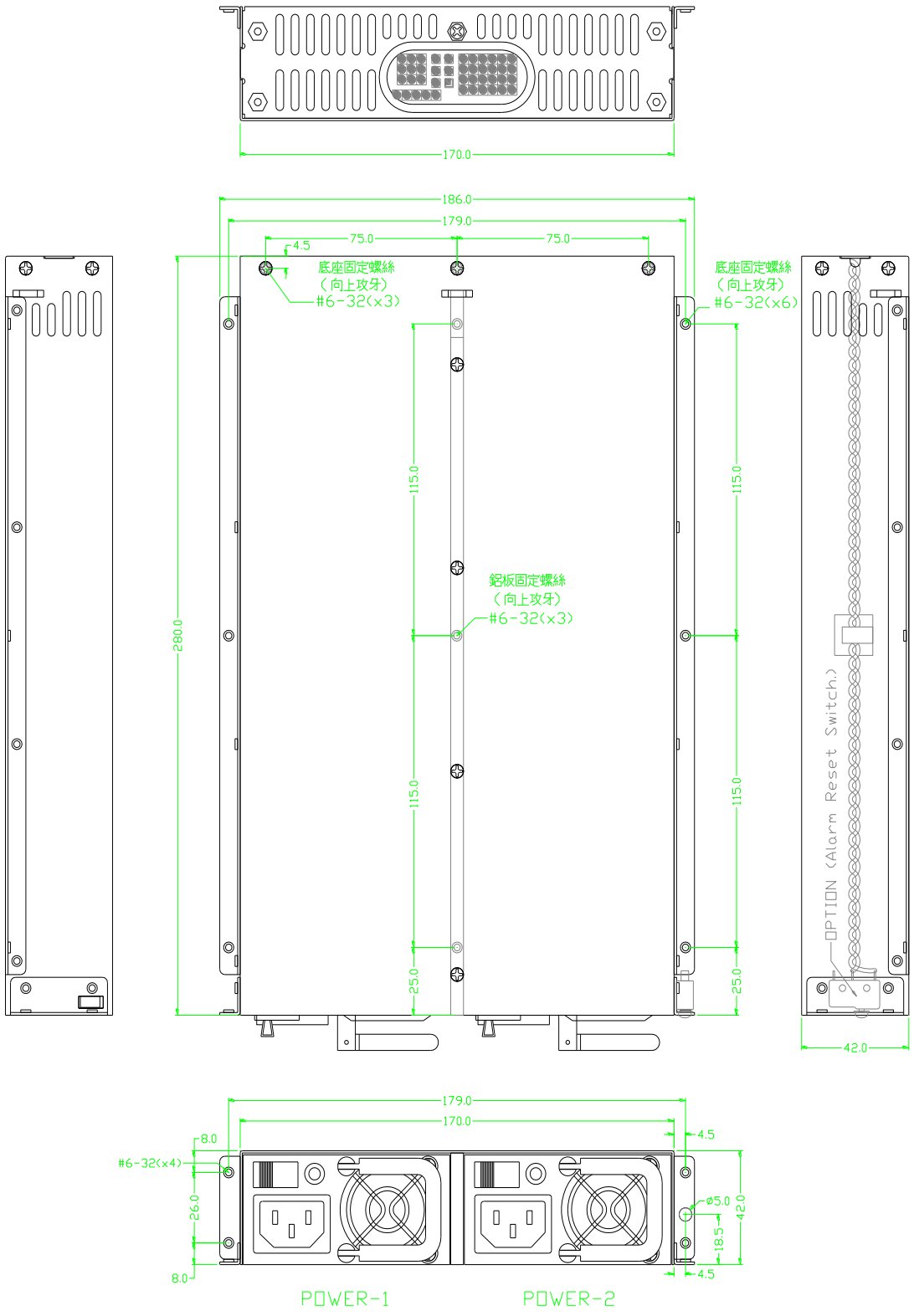

TOLEANCES	MATERIAL			UNIT	mm	PART NO.	
.X= 0.20	REMARK			SCLAE	1 : 1	MODEL	R2UH
.XX= 0.10	APPD	CKD	DRAWN	DWG NO.		NAME	水平式尺寸圖
			Green	SHEET	OF	SURESTAR	
				DATE	2010/12/28		

11. PINOUTS OF CONNECTORS

ATX or EPS (20+4)Pin x 1 ,

M8P +12V Power Connector x 1 ,

M4P +12V Power Connector x 1 ,

H.D.D. x 9 ,

Floppy x 1

SATA x 2.

修訂 REVISIONS			
版次REV	記述 DESCRIPION	簽名 SING	日期 DATE

20+4P(公座)

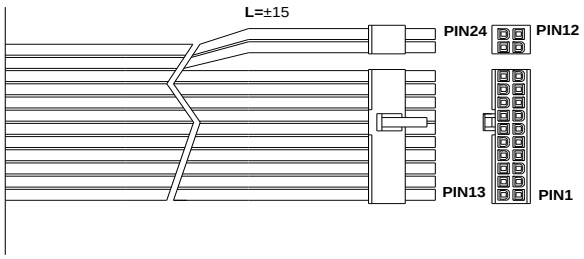

Pin No.	WIRE COLOR	線長 (LENGTH)	Pin No.	WIRE COLOR	線長 (LENGTH)
1	ORANGE	500mm/18AWG	13	ORANGE ORANGE	500mm/18AWG 500mm/22AWG
2	ORANGE	500mm/18AWG	14	BLUE	520mm/18AWG
3	BLACK	500mm/18AWG	15	BLACK	500mm/18AWG
4	RED	500mm/18AWG	16	GREEN	520mm/20AWG
5	BLACK	500mm/18AWG	17	BLACK	500mm/18AWG
6	RED	500mm/18AWG	18	BLACK	500mm/18AWG
7	BLACK	500mm/18AWG	19	BLACK	500mm/18AWG
8	GRAY	520mm/20AWG	20	NC	
9	PURPLE	500mm/18AWG	21	RED	500mm/18AWG
10	YELLOW	500mm/18AWG	22	RED	500mm/18AWG
11	YELLOW	500mm/18AWG	23	RED	500mm/18AWG
12	ORANGE	500mm/18AWG	24	BLACK	500mm/18AWG

Connector HOUSING: MOLEX 39-01-2200 or equivalent

容許公差 TOLERANCES: .XXX= ± .025 .XX= ± .1 .X= ± .2	材料規格 MATERIAL			單位 UNITS	mm	SURE STAR COMPUTER	
	核准者 APPROVE BY	審核者 CHECK BY	繪圖者 DRAW BY	圖號 DRAW NO			
投影法: PROJECTION: 第三角法			JACKY	編號 SHEET	OF	品名 MODEL NO	SS-20+4P-L500
				訂期 DATE	2009,7,6	料號 PART NO	

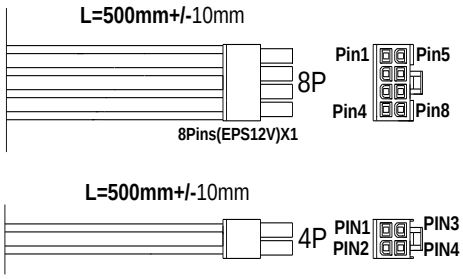

HOUSING	Pin	WIRE COLOR	LENGTH	Pin	WIRE COLOR	LENGTH
8P	1	Black/Black	500mm / 18AWG	5	Yellow/Yellow	500mm / 18AWG
	2	Black/Black	500mm / 18AWG	6	Yellow/Yellow	500mm / 18AWG
	3	Black	500mm / 18AWG	7	Yellow	500mm / 18AWG
	4	Black	500mm / 18AWG	8	Yellow	500mm / 18AWG
4P	1	Black	150mm / 18AWG	3	Yellow	150mm / 18AWG
	2	Black	150mm / 18AWG	4	Yellow	150mm / 18AWG

Connector HOUSING: MOLEX 39-01-0280 or equivalent
Connector HOUSING: MOLEX 39-01-0240 or equivalent

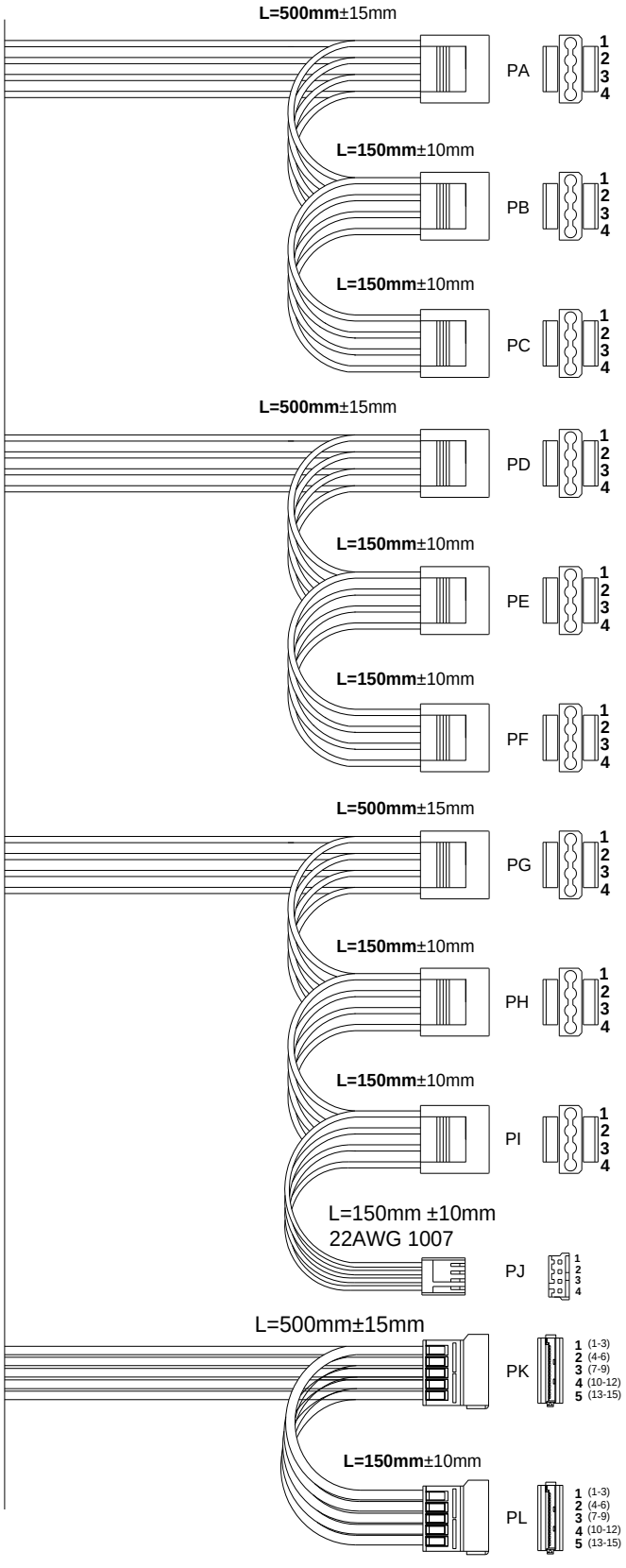

S.ATA-500L+ S.ATA-150L

Housing	Pin No.	WIRE COLOR	LENGTH	Pin No.	WIRE COLOR	LENGTH
PA	1	Yellow / Yellow	500mm/18AWG	3	Black / Black	500mm/18AWG
	2	Black / Black	500mm/18AWG	4	Red / Red	500mm/18AWG
PB	1	Yellow / Yellow	150mm/18AWG	3	Black / Black	150mm/18AWG
	2	Black / Black	150mm/18AWG	4	Red / Red	150mm/18AWG
PC	1	Yellow	150mm/18AWG	3	Black	150mm/18AWG
	2	Black	150mm/18AWG	4	Red	150mm/18AWG

Connector Housing: H.D.D. for easy plug

Housing	Pin No.	WIRE COLOR	LENGTH	Pin No.	WIRE COLOR	LENGTH
PD	1	Yellow / Yellow	500mm/18AWG	3	Black / Black	500mm/18AWG
	2	Black / Black	500mm/18AWG	4	Red / Red	500mm/18AWG
PE	1	Yellow / Yellow	150mm/18AWG	3	Black / Black	150mm/18AWG
	2	Black / Black	150mm/18AWG	4	Red / Red	150mm/18AWG
PF	1	Yellow	150mm/18AWG	3	Black	150mm/18AWG
	2	Black	150mm/18AWG	4	Red	150mm/18AWG

Connector Housing: H.D.D. for easy plug

Housing	Pin No.	WIRE COLOR	LENGTH	Pin No.	WIRE COLOR	LENGTH
PG	1	Yellow / Yellow	500mm/18AWG	3	Black / Black	500mm/18AWG
	2	Black / Black	500mm/18AWG	4	Red / Red	500mm/18AWG
PH	1	Yellow / Yellow	150mm/18AWG	3	Black / Black	150mm/18AWG
	2	Black / Black	150mm/18AWG	4	Red / Red	150mm/18AWG
PI	1	Yellow / Yellow	150mm/18AWG	3	Black / Black	150mm/18AWG
	2	Black / Black	150mm/18AWG	4	Red / Red	150mm/18AWG
PJ	1	Yellow	150mm/22AWG	3	Black	150mm/22AWG
	2	Black	150mm/22AWG	4	Red	150mm/22AWG

Connector Housing: H.D.D. for easy plug

Connector HOUSING: AMP 171822-4 or equivalent

Housing	Pin No.	WIRE COLOR	LENGTH
PK	1	Orange / Orange	500mm/18AWG
	2	Black / Black	500mm/18AWG
	3	Red / Red	500mm/18AWG
	4	Black / Black	500mm/18AWG
	5	Yellow / Yellow	500mm/18AWG
PL	1	Orange	150mm/18AWG
	2	Black	150mm/18AWG
	3	Red	150mm/18AWG
	4	Black	150mm/18AWG
	5	Yellow	150mm/18AWG

HOUSING: MOLEX 675820000 or equivalent
TERMINAL: MOLEX 675810000 or equivalent

Note: Specification and wiring diagram subject to change without notice.

End of file.

2014/4/17