CUI INC®

SERIES: TBP01P1W-508 | **DESCRIPTION:** TERMINAL BLOCK

FEATURES

- 2~24 poles
- mating flange
- 180° insertion entry
- 5.08 mm pitch
- UL and CE safety approvals

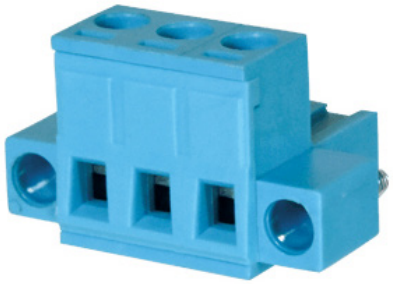



SPECIFICATIONS

parameter	conditions/description	min	typ	max	units
rated voltage (per contact)	UL IEC			300 320	V V
rated current (per contact)	UL IEC			16 20	A A
withstanding voltage			2500		Vac
surge voltage				4000	V
contact resistance				20	mΩ
insulation resistance	at 500 Vdc	500			MΩ
operating temperature		-40		105	°C
safety approvals	UL 1059, EN 60998-1:2004, EN 60998-2-1:2004				
flammability rating	UL94V-0				
RoHS	yes				

PART NUMBER KEY

TBP01P1W-508 - XX XX

Base Number

No. of Poles:
02 14
03 15
04 16
05 17
06 18
07 19
08 20
09 21
10 22
11 23
12 24
13

Color:
BE = blue
GR = green
OR = orange
YL = yellow
GY = gray
BK = black

MECHANICAL DRAWING

units: mm
tolerance (per module):
X≤6.00: ±0.25 mm
6.00<X≤30.00: ±0.40 mm
30.00<X≤60.00: ±0.60 mm
60.00<X≤150.00: ±1.00 mm
unless otherwise noted

DESCRIPTION	MATERIAL	PLATING/COLOR
housing	PA66 (UL94V-0)	
contacts	copper alloy	nickel
wire screws	steel	zinc
locking screws (M2.5, 0.4 N·m)	steel	zinc
cage	copper alloy	nickel

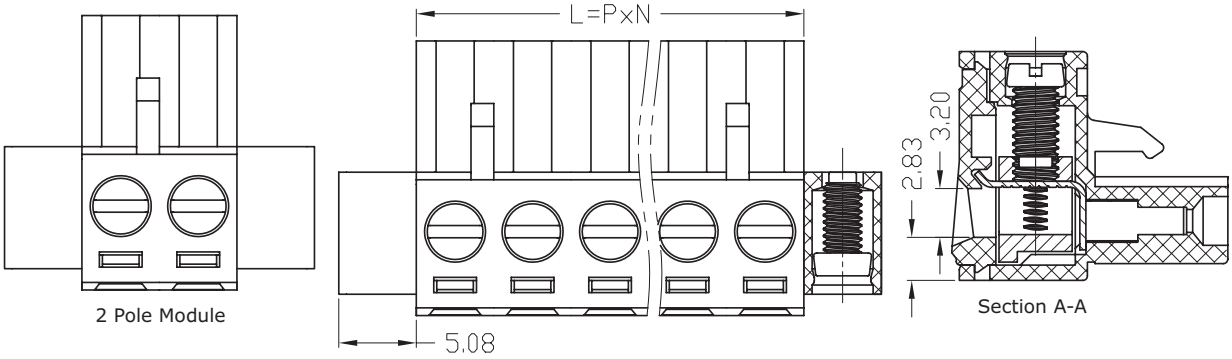

WIRE ASSEMBLY		
	UL	IEC
Wire Range	28~12 AWG	2.5 mm²
Strip Length	7 mm	
Screw Size	M3	
Screw Torque	0.5 N·m	

This series is constructed of single piece modules where L is the total length, P is the pitch, and N is the number of poles.												
N	02	03	04	05	06	07	08	09	10	11	12	13
L	10.16	15.24	20.32	25.40	30.48	35.56	40.64	45.72	50.80	55.88	60.96	66.04
B	5.08	10.16	15.24	20.32	25.40	30.48	35.56	40.64	45.72	50.80	55.88	60.96
D	15.24	20.32	25.40	30.48	35.56	40.64	45.72	50.80	55.88	60.96	66.04	71.12
N	14	15	16	17	18	19	20	21	22	23	24	--
L	71.12	76.20	81.28	86.36	91.44	96.52	101.60	106.68	111.76	116.84	121.92	--
B	66.04	71.12	76.20	81.28	86.36	91.44	96.52	101.60	106.68	111.76	116.84	--
D	76.20	81.28	86.36	91.44	96.52	101.60	106.68	111.76	116.84	121.92	127.00	

REVISION HISTORY

rev.	description	date
1.0	initial release	03/27/2019

The revision history provided is for informational purposes only and is believed to be accurate.

CUI INC®

Headquarters
20050 SW 112th Ave.
Tualatin, OR 97062
800.275.4899

Fax 503.612.2383
cui.com
techsupport@cui.com

CUI offers a one (1) year limited warranty. Complete warranty information is listed on our website.

CUI reserves the right to make changes to the product at any time without notice. Information provided by CUI is believed to be accurate and reliable. However, no responsibility is assumed by CUI for its use, nor for any infringements of patents or other rights of third parties which may result from its use.

CUI products are not authorized or warranted for use as critical components in equipment that requires an extremely high level of reliability. A critical component is any component of a life support device or system whose failure to perform can be reasonably expected to cause the failure of the life support device or system, or to affect its safety or effectiveness.