CUI INC®

SERIES: TBL001-500 | DESCRIPTION: TERMINAL BLOCK

FEATURES

- 1~24 poles
- horizontal with board
- interlocking (side)
- push button clamp
- 5.00 mm pitch
- UL and CE safety approvals



SPECIFICATIONS

parameter	conditions/description	min	typ	max	units
rated voltage (per contact)	UL IEC			300 250	V V
rated current (per contact)	UL IEC			5 15	A A
withstanding voltage			2000		Vac
surge voltage				4000	V
contact resistance				20	mΩ
insulation resistance	at 500 Vdc	500			MΩ
operating temperature		-40		105	°C
safety approvals	UL 1059, EN 60998-1:2004, EN 60998-2-1:2004				
flammability rating	UL94V-0				
RoHS	yes				

SOLDERABILITY

parameter	conditions/description	min	typ	max	units
hand soldering	for maximum 10 seconds	345	350	355	°C
wave soldering	for maximum 5 seconds	255	260	265	°C

PART NUMBER KEY

TBL001-500 - XX XX - 2XX

Base Number

No. of Poles:

01	13
02	14
03	15
04	16
05	17
06	18
07	19
08	20
09	21
10	22
11	23
12	24

Body Color:
BE = blue
GR = green
OR = orange
YL = yellow
GY = gray
BK = black

Push Button Color:
BE = blue
GR = green
OR = orange
YL = yellow
GY = gray
BK = black
WT = white

MECHANICAL DRAWING

units: mm
tolerance (per module):
X≤6.00: ±0.25 mm
6.00<X≤30.00: ±0.40 mm
unless otherwise noted

DESCRIPTION	MATERIAL	PLATING/COLOR
housing	PA66 (UL94V-0)	
contacts	copper alloy	tin
spring	stainless steel	

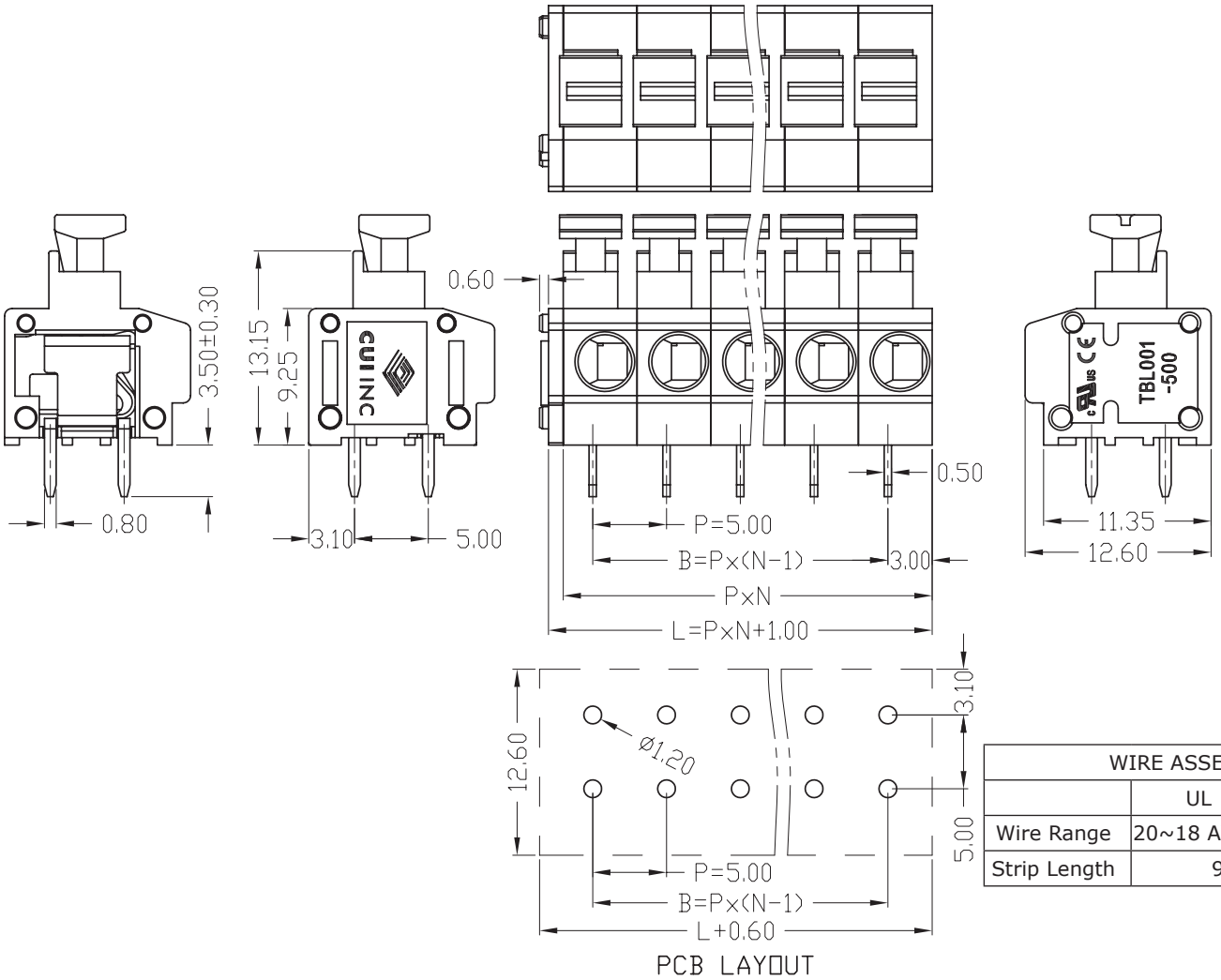

WIRE ASSEMBLY		
	UL	IEC
Wire Range	20~18 AWG	2.5 mm²
Strip Length	9~10 mm	

This series is constructed of 1 pole modules where L is the total length, P is the pitch, and N is the number of poles.												
N	01	02	03	04	05	06	07	08	09	10	11	12
L	6.00	11.00	16.00	21.00	26.00	31.00	36.00	41.00	46.00	51.00	56.00	61.00
B	--	5.00	10.00	15.00	20.00	25.00	30.00	35.00	40.00	45.00	50.00	55.00
N	13	14	15	16	17	18	19	20	21	22	23	24
L	66.00	71.00	76.00	81.00	86.00	91.00	96.00	101.00	106.00	111.00	116.00	121.00
B	60.00	65.00	70.00	75.00	80.00	85.00	90.00	95.00	100.00	105.00	110.00	115.00

REVISION HISTORY

rev.	description	date
1.0	initial release	04/17/2019

The revision history provided is for informational purposes only and is believed to be accurate.

CUI INC®

Headquarters
20050 SW 112th Ave.
Tualatin, OR 97062
800.275.4899

Fax 503.612.2383
cui.com
techsupport@cui.com

CUI offers a one (1) year limited warranty. Complete warranty information is listed on our website.

CUI reserves the right to make changes to the product at any time without notice. Information provided by CUI is believed to be accurate and reliable. However, no responsibility is assumed by CUI for its use, nor for any infringements of patents or other rights of third parties which may result from its use.

CUI products are not authorized or warranted for use as critical components in equipment that requires an extremely high level of reliability. A critical component is any component of a life support device or system whose failure to perform can be reasonably expected to cause the failure of the life support device or system, or to affect its safety or effectiveness.