TAS2770 20-W Digital Input Mono Class-D Audio Amplifier with Speaker I/V Sense

1 Features

- High-Performance Mono Class-D Amplifier
  - 20-W at 1% THD+N (4 Ω, 16 V)
  - 15.4-W at 1 % THD+N (4 Ω, 12.6 V)
  - 9.1-W at 1 % THD+N (8 Ω, 12.6 V)
  - 7.1-W at 1 % THD+N (4 Ω, 8.4 V)
  - 4-W at 1 % THD+N (8 Ω, 8.4 V)
- 0.03 % THD+N at 1 W (4 Ω, VBAT = 12.6 V)
- 32-µVrms A-Weighted Idle Channel noise
- 90-dB PSRR with 200 mV_{PP} Ripple at 20 - 20 kHz
- 82.5% Efficiency at 1 W (4 Ω, VBAT = 12.6 V)
- < 1 µA HW Shutdown VBAT Current
- 42 mW / 63 mW Idle Dissipation (8.4 V / 12.6 V)
- Speaker Voltage and Current Sense
- Real-Time Diagnostics Using I/V Speaker Sense
  - Over Current
  - Short Circuit(short to power, short to ground and terminal-to-terminal short)
  - Over-Temperature
- VBAT Tracking Peak Voltage Limiter with Brown Out Prevention
- 44.1-kHz to 192-kHz Sample Rates
- Flexible User Interfaces
  - I^2S/TDM: 8 Channels (32-bit / 96 kHz)
  - I^2C: 8 selectable Addresses
- MCLK Free Operation
- Low Pop and Click
- Power Supplies
  - VBAT: 4.5 V to 16 V
  - AVDD: 1.8 V
- Spread-Spectrum Low EMI Mode
- Thermal and Over Current Protection

2 Applications

- Laptop Computers
- Bluetooth Speakers
- Home Automation
- Smart Speakers/IoT

3 Description

The TAS2770 is a mono, digital input Class-D audio amplifier optimized for efficiently driving high peak power into small loudspeakers. The Class-D amplifier is capable of delivering 15.4 W of peak power into a 4-Ω load while sustaining 11.6 W continuously with less than 0.03 % THD+N at a battery voltage of 12.6 V.

Integrated speaker voltage and current sense provides for real time monitoring of loudspeaker behavior. A battery tracking peak voltage limiter with brown out prevention optimizes amplifier headroom over the entire charge cycle of 2S or 3S battery systems.

Up to eight devices can share a common bus via either I^2S/TDM + I^2C.

The TAS2770 device is available in a 26-pin, 0.4-mm pitch QFN for a compact PCB footprint.

Device Information(1)

PART NUMBER	PACKAGE	BODY SIZE (NOM)
TAS2770	QFN	4 mm × 3.5 mm
TAS2770	DSBGA	2 mm × 2.52 mm
SNP002770	QFN	4 mm × 3.5 mm
SNP002770	DSBGA	2 mm × 2.52 mm

(1) For all available packages, see the orderable addendum at the end of the data sheet.

Functional Block Diagram

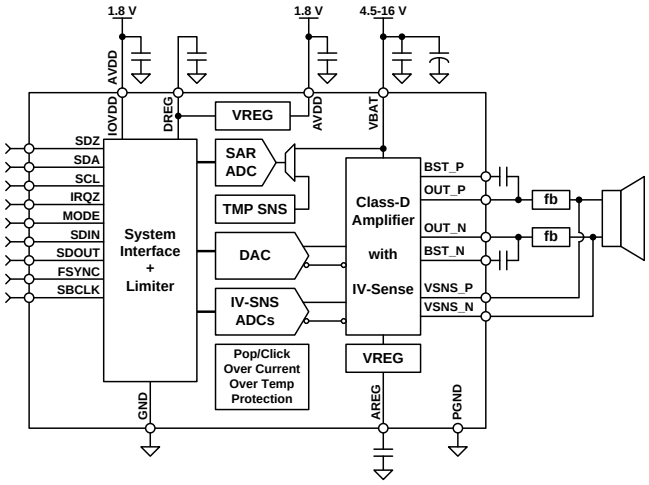

Copyright © 2016, Texas Instruments Incorporated

Table of Contents

1 Features ... 1
2 Applications ... 1
3 Description ... 1
4 Revision History ... 2
5 Pin Configuration and Functions ... 3
6 Specifications ... 5
6.1 Absolute Maximum Ratings ... 5
6.2 ESD Ratings ... 5
6.3 Recommended Operating Conditions ... 5
6.4 Thermal Information ... 5
6.5 Electrical Characteristics ... 6
6.6 I2C Timing Requirements ... 11
6.7 TDM Port Timing Requirements ... 12
6.8 PDM Port Timing Requirements ... 12
6.9 Typical Characteristics ... 14
7 Parameter Measurement Information ... 19
8 Detailed Description ... 20
8.1 Overview ... 20
8.2 Functional Block Diagram ... 20
8.3 Feature Description ... 20
8.4 Device Functional Modes ... 23
8.5 Register Maps ... 46
9 Application and Implementation ... 73
9.1 Application Information ... 73
9.2 Typical Application ... 73
9.3 Initialization Set Up ... 75
10 Power Supply Recommendations ... 78
11 Layout ... 79
11.1 Layout Guidelines ... 79
11.2 Layout Example ... 79
12 Device and Documentation Support ... 84
12.1 Receiving Notification of Documentation Updates 84
12.2 Community Resources ... 84
12.3 Trademarks ... 84
12.4 Electrostatic Discharge Caution ... 84
12.5 Glossary ... 84
13 Mechanical, Packaging, and Orderable Information ... 84

4 Revision History

NOTE: Page numbers for previous revisions may differ from page numbers in the current version.

Changes from Revision A (December 2017) to Revision B	Page
• Changed From: Efficiency (%) To: VDD PSRR (dB) in Figure 18	15
• Changed From: Efficiency (%) To: VBAT PSRR (dB) in Figure 19	15

Changes from Original (October 2017) to Revision A	Page
• Released TAS2770 as Production Data	1

Copyright © 2017–2018, Texas Instruments Incorporated

5 Pin Configuration and Functions

QFN Package
26-Pin RJQ
Top View

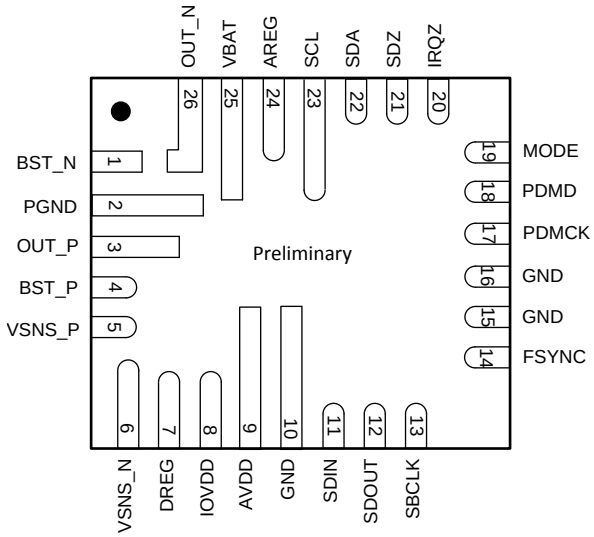

Drawing is Preliminary.

WCSP
30-Ball
Top View

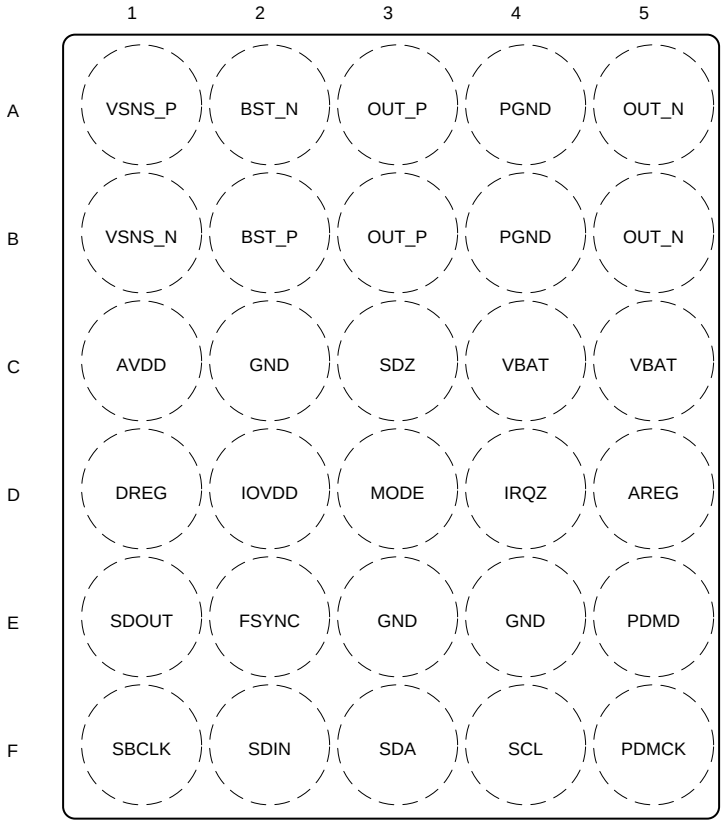

Not to scale

Pin Functions

PIN			I/O	DESCRIPTION
DSBGA	QFN	NAME		
D5	24	AREG	O	Gate drive voltage regulator output. Decouple with cap to GND. Do not connect to external load.
C1	9	AVDD	P	Analog power input. Connect to 1.8V supply and decouple to GND with cap.
A2	1	BST_N	I	Class-D negative bootstrap. Connect a cap between BST_N and OUT_N.
B2	4	BST_P	I	Class-D positive bootstrap. Connect a cap between BST_P and OUT_P.
D1	7	DREG	O	Digital core voltage regulator output. Bypass to GND with a cap. Do not connect to external load.
E2	14	FSYNC	I	TDM Frame Sync.
C2, E3, E4	10, 15, 16	GND	P	Analog GND. Connect to PCB GND Plane.
D2	8	IOVDD	P	Digital IO Supply. Connect to the same 1.8 V supply that powers AVDD and decouple with a cap to GND.
D4	20	IRQZ	O	Open drain, actve low interrupt pin. Pull up to IOVDD with resistor if optional internal pull up is not used.
D3	19	MODE	I	Mode detect pin. This pin can detect a short to IOVDD or GND, a 470 Ω connection to IOVDD or GND, a 2.2 kΩ connection to IOVDD or GND, a 10 kΩ connection to IOVDD or GND and a 47 kΩ connection to IOVDD. Minimize capacitive loading on this pin and do not connect to any other load.
A5, B5	26	OUT_N	O	Class-D negative output.
A3, B3	3	OUT_P	O	Class-D positive output.
F5	17	PDMCK	IO	PDM Clock.
E5	18	PDMD	I	PDM Digital Input.
A4, B4	2	PGND	P	Class-D GND. Connect to PCB GND Plane.
F1	13	SBCLK	I	TDM Serial Bit Clock in TDM/I^2C Mode.
F4	23	SCL	I	I^2C Clock Pin. Pull up to IOVDD with a resistor.
F3	22	SDA	IO	I^2C Data Pin. Pull up to IOVDD with a resistor.
F2	11	SDIN	I	TDM Serial Data Input.
E1	12	SDOUT	IO	TDM Serial Data Output in TDM/I^2C Mode.
C3	21	SDZ	I	Active low hardware shutdown.
C4, C5	25	VBAT	P	Class-D power supply input. Connect to VBAT supply and decouple with a cap.
B1	6	VSNS_N	I	Voltage Sense negative input. Connect to Class-D negative output after Ferrite bead filter.
A1	5	VSNS_P	I	Voltage Sense positive input. Connect to Class-D positive output after Ferrite bead filter.

Copyright © 2017–2018, Texas Instruments Incorporated

6 Specifications

6.1 Absolute Maximum Ratings

over operating free-air temperature range (unless otherwise noted) (1)

		MIN	MAX	UNIT
Supply Voltage	AVDD	–0.3	2	V
	IOVDD	–0.3	2	V
	VBAT	–0.3	19	V
Input voltage (2)	Digital IOs referenced to IOVDD supply	–0.3	2.3	V
Operating free-air temperature, T_A ; Device is functional and reliable, some performance characteristics may be degraded.		–40	85	°C
Performance free-air temperature, T_P ; All performance characteristics are met.		–20	70	°C
Operating junction temperature, T_J		–40	150	°C
Storage temperature, T_{stg}		–65	150	°C

(1) Stresses beyond those listed under *Absolute Maximum Ratings* can cause permanent damage to the device. These are stress ratings only, which do not imply functional operation of the device at these or any other conditions beyond those indicated under *Recommended Operating Procedures*. Exposure to absolute-maximum-rated conditions for extended periods can affect device reliability.
(2) All digital inputs and IOs are failsafe.

6.2 ESD Ratings

			VALUE	UNIT
$V_{(ESD)}$	Electrostatic discharge	Human-body model (HBM), per ANSI/ESDA/JEDEC JS-001 (1)	±2500	V
		Charged-device model (CDM), per JEDEC specification JESD22-C101 (2)	±1500	

(1) JEDEC document JEP155 states that 500-V HBM allows safe manufacturing with a standard ESD control process.
(2) JEDEC document JEP157 states that 250-V CDM allows safe manufacturing with a standard ESD control process.

6.3 Recommended Operating Conditions

over operating free-air temperature range (unless otherwise noted)

		MIN	NOM	MAX	UNIT
AVDD	Supply voltage	1.65	1.8	1.95	V
IOVDD	Supply voltage	1.65	1.8	1.95	V
VBAT	Supply voltage	4.5		16	V
V_{IH}	High-level digital input voltage		IOVDD		V
V_{IL}	Low-level digital input voltage		0		V
R_{SPK}	Minimum speaker impedance	3.2			Ω
L_{SPK}	Minimum speaker inductance	10			µH

6.4 Thermal Information

THERMAL METRIC (1)		TAS2770 QFN (RJQ) 26 PINS	UNIT
$R_{\theta JA}$	Junction-to-ambient thermal resistance	57.0	°C/W
$R_{\theta JC(top)}$	Junction-to-case (top) thermal resistance	0.3	°C/W
$R_{\theta JB}$	Junction-to-board thermal resistance	8.5	°C/W
ψ_{JT}	Junction-to-top characterization parameter	0.2	°C/W
ψ_{JB}	Junction-to-board characterization parameter	8.7	°C/W
$R_{\theta JC(bot)}$	Junction-to-case (bottom) thermal resistance	NA	°C/W

(1) For more information about traditional and new thermal metrics, see the *Semiconductor and IC Package Thermal Metrics* application report.

Copyright © 2017–2018, Texas Instruments Incorporated

6.5 Electrical Characteristics

T_A = 25 °C, VBAT = 12.6 V, AVDD = IOVDD = 1.8 V, R_L = 4 Ω + 33 µH, f_{in} = 1 kHz, SSM, f_s = 48 kHz, Gain = 21 dBV, SDZ = 1, Measured filter free using Parameter Measurement Information (unless otherwise noted).

PARAMETER		TEST CONDITIONS	MIN	TYP	MAX	UNIT
DIGITAL INPUT and OUTPUT						
V_{IH}	High-level digital input logic voltage threshold	All digital pins except SDA and SCL; IOVDD = 1.8 V.	0.65 × IOVDD			V
V_{IL}	Low-level digital input logic voltage threshold	All digital pins except SDA and SCL; IOVDD = 1.8 V.			0.35 × IOVDD	V
$V_{IH(I2C)}$	High-level digital input logic voltage threshold	SDA and SCL; IOVDD = 1.8 V.	0.7 x IOVDD			V
$V_{IL(I2C)}$	Low-level digital input logic voltage threshold	SDA and SCL; IOVDD = 1.8 V.			0.3 x IOVDD	V
V_{OH}	High-level digital output voltage	All digital pins except SDA, SCL and IRQZ; IOVDD = 1.8 V; I_{OH} = 2 mA.	IOVDD – 0.45 V			V
V_{OL}	Low-level digital output voltage	All digital pins except SDA, SCL and IRQZ; IOVDD = 1.8 V; I_{OL} = –2 mA.			0.45	V
$V_{OL(I2C)}$	Low-level digital output voltage	SDA and SCL; IOVDD = 1.8 V; $I_{OL(I2C)}$ = –2 mA.			0.2 x IOVDD	V
$V_{OL(IRQZ)}$	Low-level digital output voltage for IRQZ open drain Output	IRQZ; IOVDD = 1.8 V; $I_{OL(IRQZ)}$ = –2 mA.			0.45	V
I_{IH}	Input logic-high leakage for digital inputs	All digital pins; Input = IOVDD.	–5	0.1	5	µA
I_{IL}	Input logic-low leakage for digital inputs	All digital pins; Input = GND.	–5	0.1	5	µA
C_{IN}	Input capacitance for digital inputs	All digital pins		5		pF
R_{PD}	Pull down resistance for digital input/IO pins when asserted on	SDOUT, SDIN, FSYNC, SBCLK, PDMD, PDMCK		18		kΩ
TDM SERIAL AUDIO PORT						
	PCM Sample Rates & FSYNC Input Frequency	Single Speed, I^2S/TDM Operation		48		kHz
		Double Speed, I^2S/TDM Operation		96		
		Quadruple Speed, I^2S/TDM Operation		192		
	SBCLK Input Frequency	I^2S/TDM Operation	2.54		27.1	MHz
	SBCLK Maximum Input Jitter	RMS Jitter below 40 kHz that can be tolerated without performance degradation		1		ns
		RMS Jitter above 40 kHz that can be tolerated without performance degradation		10		
	SBCLK Cycles per FSYNC in I^2S and TDM Modes	Values: 64, 96, 128, 192, 256, 384 and 512	64		512	Cycles
PDM AUDIO PORT						
	PDM clock input frequency	Single Rate PDM		3.072		MHz
		Double Rate PDM		6.144		
	PDM sensor clock rate to PCM sample rate oversampling ratios	Single Speed PCM. Values: 64X and 128X.	64		128	
		Double Speed PCM. Values: 32X and 64X.	32		64	
		Quadruple Speed PCM. Values: 16X and 32X.	16		32	
PROTECTION CIRCUITRY						
	Thermal shutdown temperature			140		°C
	Thermal shutdown retry			1.5		s
	VBAT undervoltage lockout threshold (UVLO)	UVLO is asserted		4		V

Copyright © 2017–2018, Texas Instruments Incorporated

Electrical Characteristics (continued)

T_A = 25 °C, VBAT = 12.6 V, AVDD = IOVDD = 1.8 V, R_L = 4 Ω + 33 µH, f_{in} = 1 kHz, SSM, f_s = 48 kHz, Gain = 21 dBV, SDZ = 1, Measured filter free using Parameter Measurement Information (unless otherwise noted).

PARAMETER		TEST CONDITIONS	MIN	TYP	MAX	UNIT
	VBAT overvoltage lockout threshold (OVLO)	OVLO is asserted		18		V
AMPLIFIER PERFORMANCE						
P_{OUT}	Maximum Continuous Output Power 0.1% THD+N	R_L = 8 Ω + 33 µH, THD+N = 0.1 %, f_{in} = 1 kHz, VBAT = 8.4 V		3.7		W
		R_L = 4 Ω + 33 µH, THD+N = 0.1 %, f_{in} = 1 kHz, VBAT = 8.4 V		6.6		
		R_L = 8 Ω + 33 µH, THD+N = 0.1 %, f_{in} = 1 kHz, VBAT = 12.6 V		8.5		
		R_L = 4 Ω + 33 µH, THD+N = 0.1 %, f_{in} = 1 kHz, VBAT = 12.6 V		14.2		
	Maximum Continuous Output Power 1% THD+N	R_L = 8 Ω + 33 µH, THD+N = 1 %, f_{in} = 1 kHz, VBAT = 8.4 V		4		
		R_L = 4 Ω + 33 µH, THD+N = 1 %, f_{in} = 1 kHz, VBAT = 8.4 V		7.1		
		R_L = 8 Ω + 33 µH, THD+N = 1 %, f_{in} = 1 kHz, VBAT = 12.6 V		9.1		
		R_L = 4 Ω + 33 µH, THD+N = 1 %, f_{in} = 1 kHz, VBAT = 12.6 V		15.4		
	System efficiency at P_{OUT} = 1 W	R_L = 8 Ω + 33 µH, f_{in} = 1 kHz, VBAT = 8.4 V		89 %		
		R_L = 4 Ω + 33 µH, f_{in} = 1 kHz, VBAT = 8.4 V		84 %		
		R_L = 8 Ω + 33 µH, f_{in} = 1 kHz, VBAT = 12.6 V		87.5 %		
		R_L = 4 Ω + 33 µH, f_{in} = 1 kHz, VBAT = 12.6 V		82.7 %		
	System efficiency at 0.1% THD+N power level	R_L = 8 Ω + 33 µH, P_{OUT} = 3.7W, f_{in} = 1 kHz, VBAT = 8.4 V		92 %		
		R_L = 4 Ω + 33 µH, P_{OUT} = 6.6 W, f_{in} = 1 kHz, VBAT = 8.4 V		87 %		
		R_L = 8 Ω + 33 µH, P_{OUT} = 8.5 W, f_{in} = 1 kHz, VBAT = 12.6 V		92 %		
		R_L = 4 Ω + 33 µH, P_{OUT} = 14.2 W, f_{in} = 1 kHz, VBAT = 12.6 V		86 %		
THD+N	Total harmonic distortion + noise	P_{OUT} = 1 W, R_L = 8 Ω + 33 µH, f_{in} = 20 Hz - 20 kHz, VBAT = 8.4 V		0.01 %		
		P_{OUT} = 1 W, R_L = 4 Ω + 33 µH, f_{in} = 20 Hz - 20 kHz, VBAT = 8.4 V		0.01 %		
		P_{OUT} = 1 W, R_L = 8 Ω + 33 µH, f_{in} = 20 Hz - 20 kHz, VBAT = 12.6 V		0.01 %		
		P_{OUT} = 1 W, R_L = 4 Ω + 33 µH, f_{in} = 20 Hz - 20 kHz, VBAT = 12.6 V		0.01 %		
V_N	Idle channel noise	A-Weighted, 20 Hz - 20 kHz, DAC Modulator Running		31		µV
		V_{BAT} = 8.4 V		32		µV
		V_{BAT} = 12.6 V		36		µV

Copyright © 2017–2018, Texas Instruments Incorporated

Electrical Characteristics (continued)

T_A = 25 °C, VBAT = 12.6 V, AVDD = IOVDD = 1.8 V, R_L = 4 Ω + 33 µH, f_{in} = 1 kHz, SSM, f_s = 48 kHz, Gain = 21 dBV, SDZ = 1, Measured filter free using Parameter Measurement Information (unless otherwise noted).

PARAMETER		TEST CONDITIONS	MIN	TYP	MAX	UNIT
F_{PWM}	Class-D PWM switching frequency	Average frequency in Spread Spectrum Mode, CLASSD_SYNC=0		384		kHz
		Fixed Frequency Mode, CLASSD_SYNC=0	345.6	384	422.4	
		Fixed Frequency Mode, CLASSD_SYNC=1, f_s = 44.1, 88.2, 174.6 kHz		44.1·8		
		Fixed Frequency Mode, CLASSD_SYNC=1, f_s = 48, 96, 192 kHz		48·8		
V_{OS}	Output offset voltage		-1		1	mV
DNR	Dynamic range	A-Weighted, -60 dBFS Method		108		dB
SNR	Signal to noise ratio	A-Weighted, Referenced to 1 % THD+N Output Level		108		dB
K_{CP}	Click and pop performance	Into and out of Mute, Shutdown, Power Up, Power Down and audio clocks starting and stopping. A-weighted		5		mV
	Programmable output level range		12.5		21	dBV
	Programmable output level step size			0.5		dB
AV_{ERROR}	Amplifier gain error	P_{OUT}=1W		±0.1		dB
A_{RIPPLE}	Frequency response passband ripple	20 Hz - 20 kHz		±0.1		dB
	Mute attenuation	Device in Shutdown or Muted in Normal Operation		110		dB
	Output short circuit limit	VBAT = 12.6 V, Output to Output, Output to GND or Output to VBAT Short		6		A
$R_{DS(ON)FET}$	Power stage on-resistance (high-side + low-side + sense resistor)	T_A = 25 °C		510		mΩ
	VBAT power-supply rejection ratio	VBAT = 12.6 V + 200 mV_{pp}, f_{ripple} = 217 Hz		105		dB
		VBAT = 12.6 V + 200 mV_{pp}, f_{ripple} = 20 kHz		86		
	AVDD power-supply rejection ratio	AVDD = 1.8 V + 200 mV_{pp}, f_{ripple} = 217 Hz		95		dB
		AVDD = 1.8 V + 200 mV_{pp}, f_{ripple} = 20 kHz		88		
	Turn on time from release of SW shutdown	No Volume Ramping		1.2		ms
		Volume Ramping		5.3		
	Turn off time from assertion of SW shutdown to amp Hi-Z	No Volume Ramping		0.3		ms
		Volume Ramping		4.7		
PCM PLAYBACK CHARACTERISTICS						
	Playback latency from latched input sample to speaker terminals	Single Speed, I^2S/TDM		3.5		samples
		Double Speed, I^2S/TDM		3.5		
		Quadruple Speed, I^2S/TDM		3.5		
	Playback –0.1 dB bandwidth	Single Speed, I^2S/TDM			23.06	kHz
		Double Speed, I^2S/TDM			21.79	
		Quadruple Speed, I^2S/TDM			21.69	

Copyright © 2017–2018, Texas Instruments Incorporated

Electrical Characteristics (continued)

T_A = 25 °C, VBAT = 12.6 V, AVDD = IOVDD = 1.8 V, R_L = 4 Ω + 33 µH, f_{in} = 1 kHz, SSM, f_s = 48 kHz, Gain = 21 dBV, SDZ = 1, Measured filter free using Parameter Measurement Information (unless otherwise noted).

PARAMETER		TEST CONDITIONS	MIN	TYP	MAX	UNIT
	Playback –3 dB bandwidth	Single Speed, I^2S/TDM			24	kHz
		Double Speed, I^2S/TDM			23	
		Quadruple Speed, I^2S/TDM			27.26	
PDM PLAYBACK CHARACTERISTICS						
	Playback latency from latched data bit to speaker terminals	Single Rate PDM, PDMD input		7.07		µs
		Double Rate PDM, PDMD input		5.02		
	Playback –0.1 dB bandwidth	Single Rate PDM, PDMD input		41.5		kHz
		Double Rate PDM, PDMD input		88		
	Playback –3 dB bandwidth	Single Rate PDM, PDMD input		77.5		kHz
		Double Rate PDM, PDMD input		143		
SPEAKER CURRENT SENSE						
DNR	Dynamic range	Un-Weighted, Relative to 0 dBFS		69		dB
THD+N	Total harmonic distortion + noise	R_L = 8 Ω + 33 µH, f_{in} = 1 kHz, P_{OUT} = 5 W		–60		dB
		R_L = 4 Ω + 33 µH, f_{in} = 1 kHz, P_{OUT} = 7.5 W		–60		
	Full-scale input current			3.75		A
	Current-sense accuracy	R_L = 8 Ω + 33 µH, I_{OUT} = 354 mA_{RMS} (P_{OUT} = 1 W)		±1 %		
	Current-sense gain error over temperature	–20°C to 70°C, P_{OUT} = 1 W		±0.75%		
	Current-sense gain error over output power	50 mW to 0.1 % THD+N level, f_{in} = 1 kHz, 4 Ω, using a 40Hz-34dB pilot tone		±0.75%		
	Current-sense frequency response	Max deviation above and below passband gain		±0.2		dB
SPEAKER VOLTAGE SENSE						
DNR	Dynamic range	Un-Weighted, Relative 0 dBFS		69		dB
THD+N	Total harmonic distortion + noise	R_L = 8 Ω + 33 µH, f_{in} = 1 kHz, P_{OUT} = 5 W		–60		dB
		R_L = 4 Ω + 33 µH, f_{in} = 1 kHz, P_{OUT} = 7.5 W		–60		
	Full-scale input voltage			14		V_{PK}
	Voltage-sense accuracy	R_L = 8 Ω + 33 µH, I_{OUT} = 354 mA_{RMS} (P_{OUT} = 1 W)		±1%		
	Voltage-sense gain error over temperature	–20°C to 70°C, P_{OUT} = 1 W		±0.75%		
	Voltage-sense gain error over output power	50 mW to 0.1 % THD+N level, f_{in} = 1 kHz, 4 Ω, using a 40Hz-34dB pilot tone		±0.75%		
	Voltage-sense frequency response	Max deviation above and below passband gain		±0.2		dB
SPEAKER VOLTAGE/CURRENT SENSE RATIO						
	Gain ratio error over output power	50 mW to 0.1 % THD+N level, f_{in} = 1 kHz, 4 Ω, using a 40Hz-34dB pilot tone		±0.75%		
	Gain ratio error over temperature	–20°C to 70°C		±0.5%		
TYPICAL CURRENT CONSUMPTION						

Copyright © 2017–2018, Texas Instruments Incorporated

Electrical Characteristics (continued)

T_A = 25 °C, VBAT = 12.6 V, AVDD = IOVDD = 1.8 V, R_L = 4 Ω + 33 µH, f_{in} = 1 kHz, SSM, f_s = 48 kHz, Gain = 21 dBV, SDZ = 1, Measured filter free using Parameter Measurement Information (unless otherwise noted).

PARAMETER	TEST CONDITIONS	MIN	TYP	MAX	UNIT
Current consumption in hardware shutdown	SDZ = 0, VBAT		0.1		µA
	SDZ = 0, AVDD		1		
	SDZ = 0, IOVDD		0.1		
Current consumption in software shutdown	All Clocks Stopped, VBAT		10		µA
	All Clocks Stopped, AVDD		10		
	All Clocks Stopped, IOVDD		1		
Current consumption during active operation with IV sense disabled	f_s = 48 kHz, VBAT		3.1		mA
	f_s = 48 kHz, AVDD		10		
	f_s = 48 kHz, IOVDD		0.1		
Current consumption during active operation with IV sense enabled	f_s = 48 kHz, VBAT		3.1		mA
	f_s = 48 kHz, AVDD		12.5		
	f_s = 48 kHz, IOVDD		0.1		
PEAK VOLTAGE LIMITER					
Limiter maximum threshold		2		14.7	V
Limiter minimum threshold		2		14.7	V
Limiter inflection point		2		14.7	V
Limiter VBAT tracking slope		1		4	V/V
Limiter max attenuation		1		16.5	dB
Limiter latency	Time from VBAT dipping below threshold to initial gain reduction			23	µs
Limiter attack rate		5		640	µs/step
Limiter attack step size		0.25		2	dB/step
Limiter hold time		0		1000	ms
Limiter release rate		10		1500	ms/step
Limiter release step size		0.25		2	dB/step
BROWN OUT PREVENTION LIMITER					
Brownout prevention threshold		4.5		10.875	V
Brownout prevention threshold step size			25		mV
Brownout prevention threshold tolerance	Measured at VBAT of 5V and 10V		±25		mV
Brownout prevention latency	Time from VBAT dipping below threshold to initial gain reduction			20	µs
Brownout prevention attack rate		5		640	µs/step
Brownout prevention attack step size		0.5		2	dB/step
Brownout prevention hold time		0		1000	ms
Brownout prevention release rate		10		1500	ms/step
Brownout prevention release step size		0.25		2	dB/step

Copyright © 2017–2018, Texas Instruments Incorporated

6.6 I²C Timing Requirements

T_A = 25 °C, AVDD = IOVDD = 1.8 V (unless otherwise noted)

		MIN	NOM	MAX	UNIT
Standard-Mode					
f_{SCL}	SCL clock frequency	0		100	kHz
$t_{HD;STA}$	Hold time (repeated) START condition. After this period, the first clock pulse is generated.	4			µs
t_{LOW}	LOW period of the SCL clock	4.7			µs
t_{HIGH}	HIGH period of the SCL clock	4			µs
$t_{SU;STA}$	Setup time for a repeated START condition	4.7			µs
$t_{HD;DAT}$	Data hold time: For I²C bus devices	0		3.45	µs
$t_{SU;DAT}$	Data set-up time	250			ns
t_r	SDA and SCL rise time			1000	ns
t_f	SDA and SCL fall time			300	ns
$t_{SU;STO}$	Set-up time for STOP condition	4			µs
t_{BUF}	Bus free time between a STOP and START condition	4.7			µs
C_b	Capacitive load for each bus line			400	pF
Fast-Mode					
f_{SCL}	SCL clock frequency	0		400	kHz
$t_{HD;STA}$	Hold time (repeated) START condition. After this period, the first clock pulse is generated.	0.6			µs
t_{LOW}	LOW period of the SCL clock	1.3			µs
t_{HIGH}	HIGH period of the SCL clock	0.6			µs
$t_{SU;STA}$	Setup time for a repeated START condition	40.6			µs
$t_{HD;DAT}$	Data hold time: For I²C bus devices	0		0.9	µs
$t_{SU;DAT}$	Data set-up time	100			ns
t_r	SDA and SCL rise time	20 + 0.1 × Cb		300	ns
t_f	SDA and SCL fall time	20 + 0.1 × Cb		300	ns
$t_{SU;STO}$	Set-up time for STOP condition	0.26			µs
t_{BUF}	Bus free time between a STOP and START condition	1.3			µs
C_b	Capacitive load for each bus line			400	pF
Fast-Mode Plus					
f_{SCL}	SCL clock frequency	0		1000	kHz
$t_{HD;STA}$	Hold time (repeated) START condition. After this period, the first clock pulse is generated.	0.26			µs
t_{LOW}	LOW period of the SCL clock	0.5			µs
t_{HIGH}	HIGH period of the SCL clock	0.26			µs
$t_{SU;STA}$	Setup time for a repeated START condition	0.26			µs
$t_{HD;DAT}$	Data hold time: For I²C bus devices	0			µs
$t_{SU;DAT}$	Data set-up time	50			ns
t_r	SDA and SCL Rise Time			120	ns
t_f	SDA and SCL Fall Time			120	ns
$t_{SU;STO}$	Set-up time for STOP condition				µs
t_{BUF}	Bus free time between a STOP and START condition	0.5			µs
C_b	Capacitive load for each bus line			550	pF

Copyright © 2017–2018, Texas Instruments Incorporated

6.7 TDM Port Timing Requirements

T_A = 25 °C, AVDD = IOVDD = 1.8 V, 20 pF load on all outputs (unless otherwise noted)

			MIN	NOM	MAX	UNIT
t_H(SBCLK)	SBCLK high period		40			ns
t_L(SBCLK)	SBCLK low period		40			ns
t_{SU}(FSYNC)	FSYNC setup time		8			ns
t_{HLD}(FSYNC)	FSYNC hold time		8			ns
t_{SU}(FSYNC)	SDIN setup time		8			ns
t_{HLD}(SDIN)	SDIN hold time		8			ns
t_d(DO-FSYNC)	FSYNC to SDOUT delay (tx_offset = 0 only)	50% of FSYNC to 50% of SDOUT			35	ns
t_d(DO-SBCLK)	SBCLK to SDOUT delay	50% of FSYNC to 50% of SDOUT			35	ns
t_r(SBCLK)	SBCLK rise time	10 % - 90 % Rise Time			8	ns
t_f(SBCLK)	SBCLK fall time	90 % - 10 % Fall Time			8	ns

6.8 PDM Port Timing Requirements

T_A = 25 °C, AVDD = IOVDD = 1.8 V, 20 pF load on all outputs (unless otherwise noted)

			MIN	NOM	MAX	UNIT
t_{SU}(PDM)	PDM IN setup time		20			ns
t_{HLD}(PDM)	PDM IN hold time		3			ns
t_r(PDM)	PDM IN rise time	10 % - 90 % Rise Time			4	ns
t_f(PDM)	PDM IN fall time	90 % - 10 % Fall Time			4	ns

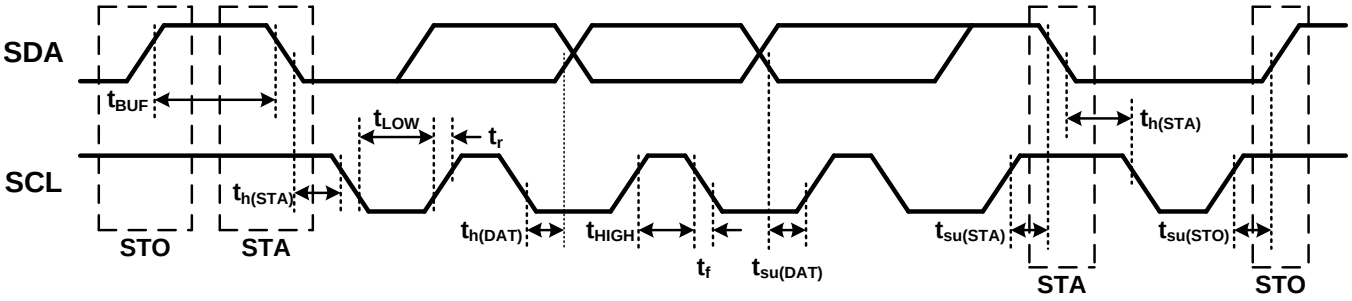

Figure 1. I2C Timing Diagram

Copyright © 2017–2018, Texas Instruments Incorporated

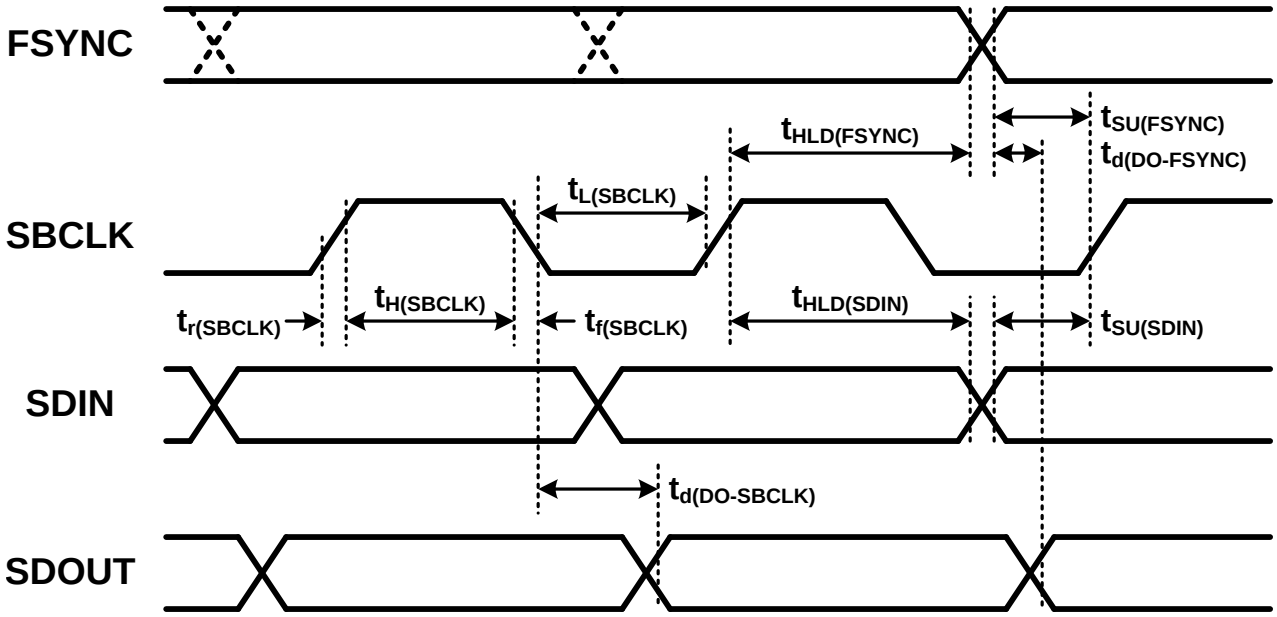

Figure 2. TDM Timing Diagram

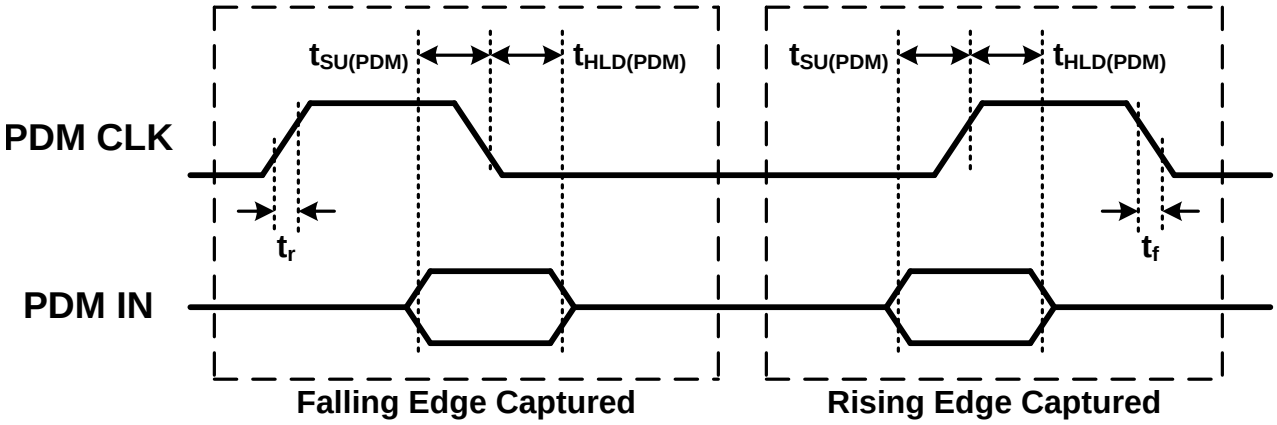

Figure 3. PDM Timing Diagram

6.9 Typical Characteristics

At T_A = 25°C, f_{SPK_AMP} = 384 kHz, input signal is 1 kHz Sine, unless otherwise noted. Filter used for Load Resistance is 30 µH, unless otherwise noted.

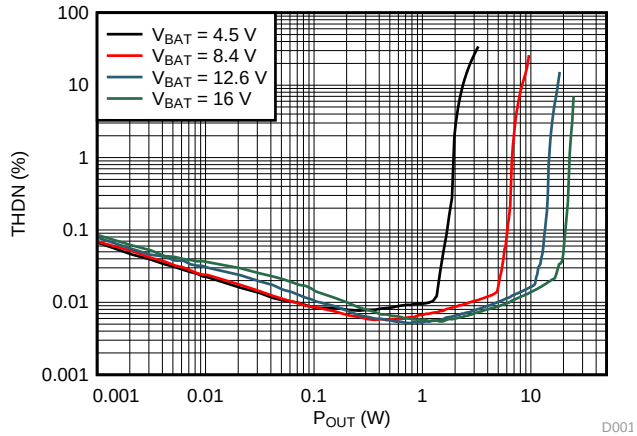

RL = 4 Ω F_{IN} = 1 kHz

Figure 4. THD+N vs Output Power

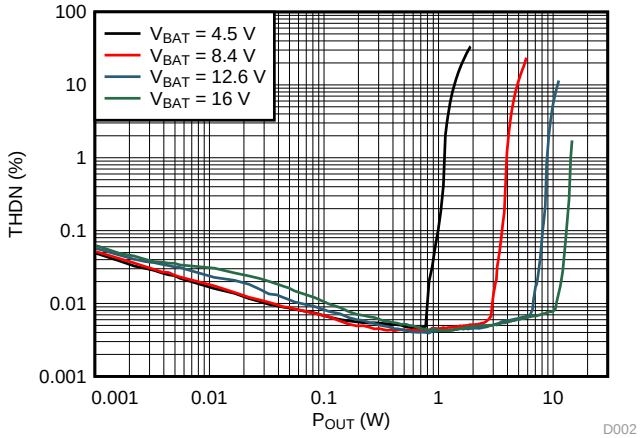

RL = 8 Ω F_S = 1 kHz F_{IN} = 1 kHz

Figure 5. THD+N vs Output Power

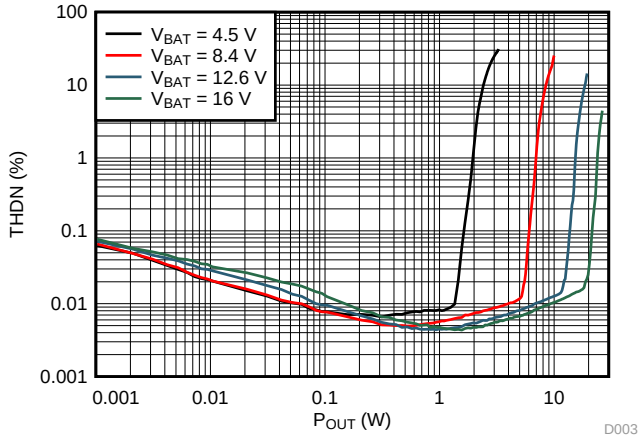

RL = 4 Ω F_{IN} = 6.667 kHz

Figure 6. THD+N vs Output Power

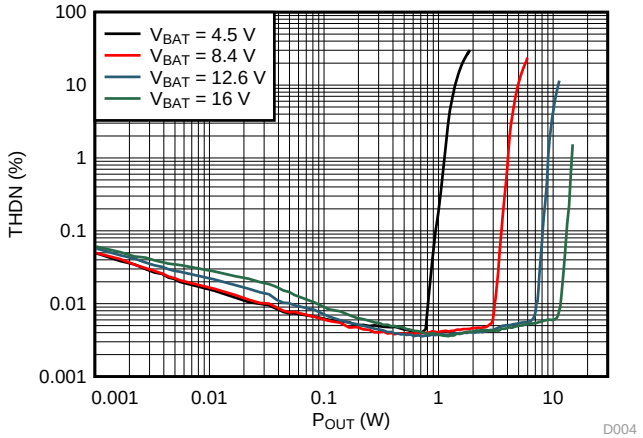

RL = 8 Ω F_{IN} = 6.667 kHz

Figure 7. THD+N vs Output Power

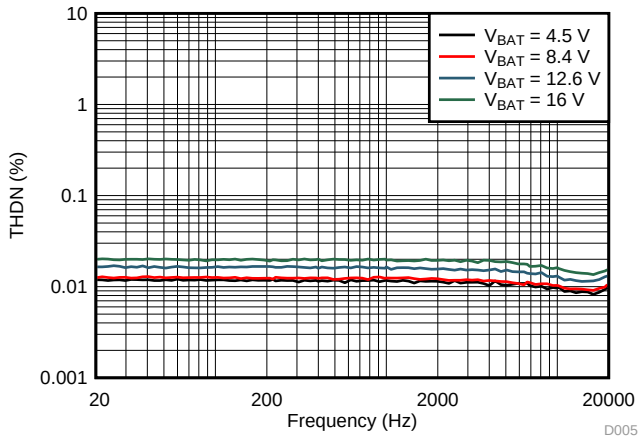

F_{IN} = 20 Hz – 20 kHz P_{OUT} = 0.1 W RL = 4 Ω + 30 µH

Figure 8. THD+N vs Frequency

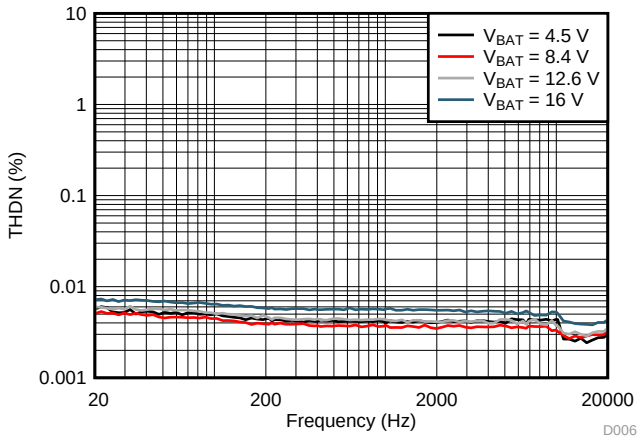

F_{IN} = 20 Hz – 20 kHz P_{OUT} = 1 W RL = 4 Ω + 30 µH

Figure 9. THD+N vs Frequency

Copyright © 2017–2018, Texas Instruments Incorporated

Typical Characteristics (continued)

At T_A = 25°C, f_{SPK_AMP} = 384 kHz, input signal is 1 kHz Sine, unless otherwise noted. Filter used for Load Resistance is 30 µH, unless otherwise noted.

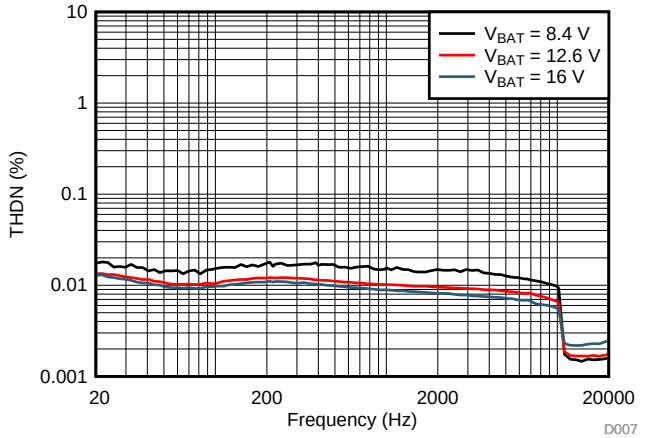

F_{IN} = 20 Hz – 20 kHz P_{OUT} = 5 W RL = 4 Ω + 30 µH

Figure 10. THD+N vs Frequency

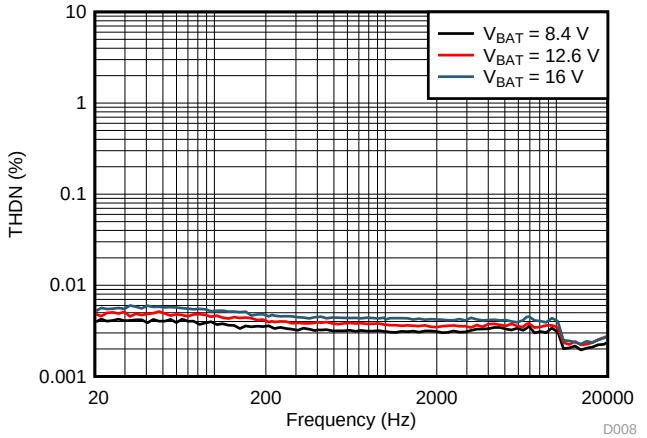

F_{IN} = 20 Hz – 20 kHz P_{OUT} = 1 W RL = 8 Ω + 30 µH

Figure 11. THD+N vs Frequency

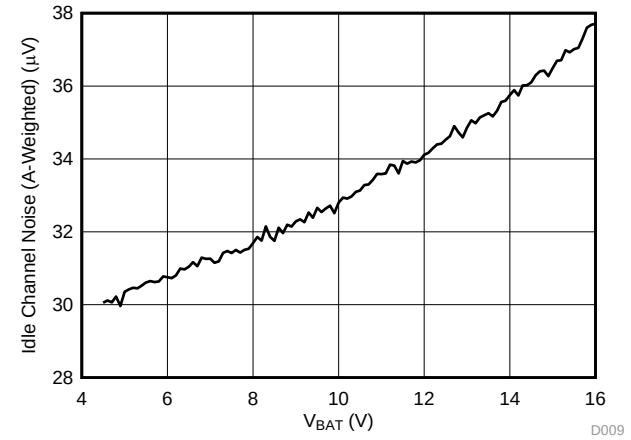

VBAT = 4.5 V – 16 V

Figure 12. Idle Channel Noise (A-Weighted) vs V_{BAT}

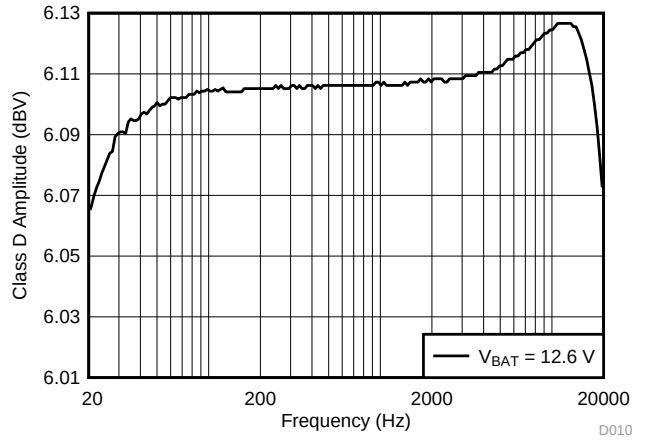

F_S = 48 kHz P_{OUT} = 1 W

Figure 13. Amplitude vs Frequency

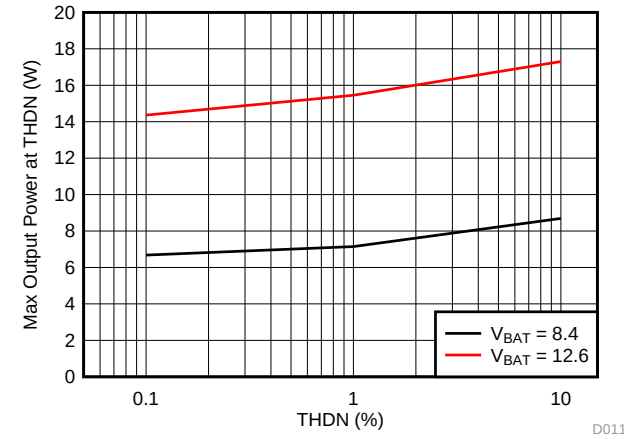

RL = 4 Ω

Figure 14. Max Output Power vs THD+N

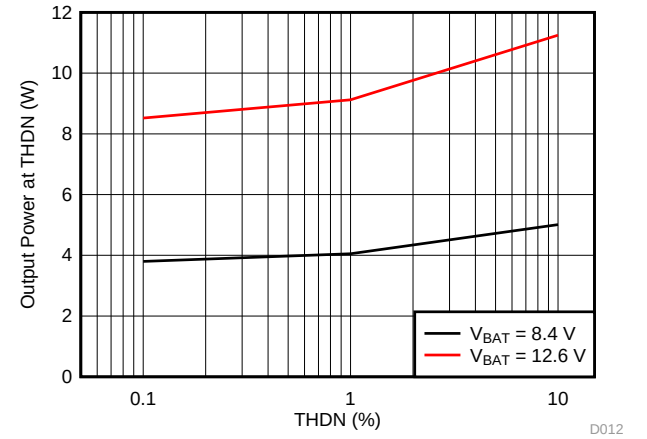

RL = 8 Ω

Figure 15. Max Output Power vs THD+N

Copyright © 2017–2018, Texas Instruments Incorporated

Typical Characteristics (continued)

At T_A = 25°C, f_{SPK_AMP} = 384 kHz, input signal is 1 kHz Sine, unless otherwise noted. Filter used for Load Resistance is 30 µH, unless otherwise noted.

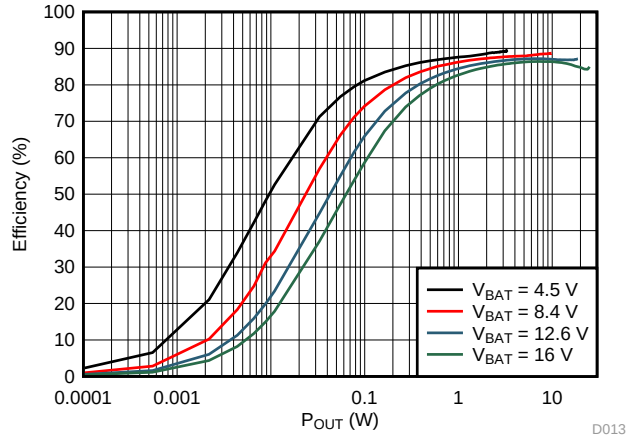

RL = 4 Ω F_{IN} = 1 kHz

Figure 16. Efficiency vs Output Power

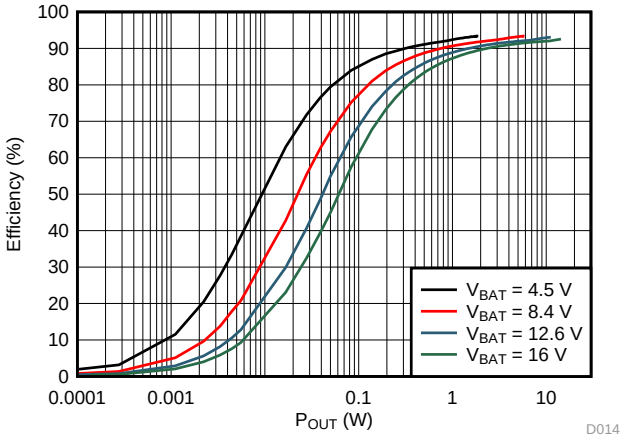

RL = 8 Ω F_{IN} = 1 kHz

Figure 17. Efficiency vs Output Power

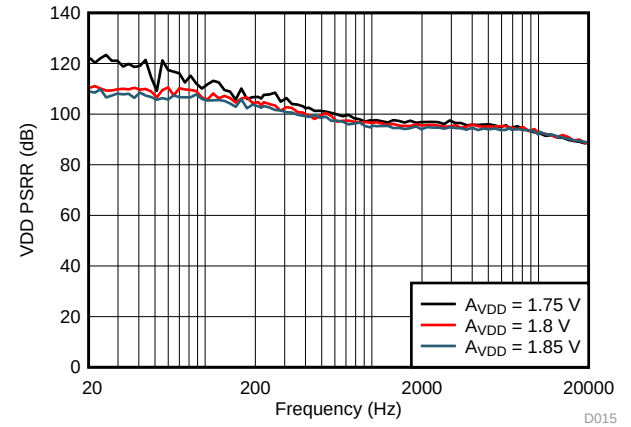

Figure 18. VDD PSRR vs Frequency

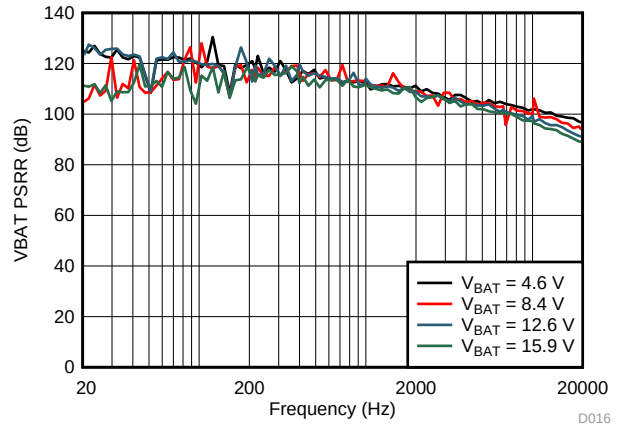

Figure 19. VBAT PSRR vs Frequency

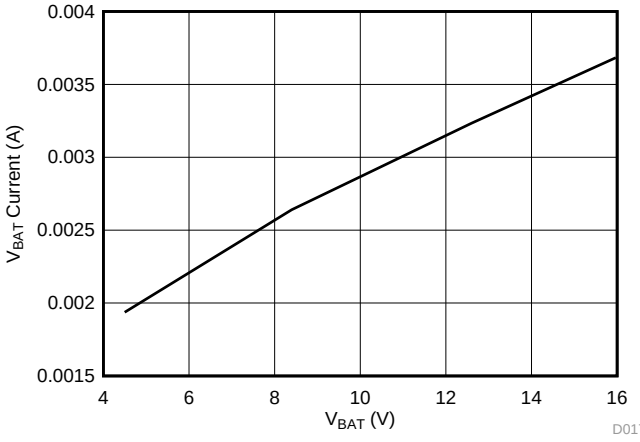

V_{BAT} = 4.5 V – 16 V

Figure 20. V_{BAT} Idle Current vs V_{BAT}

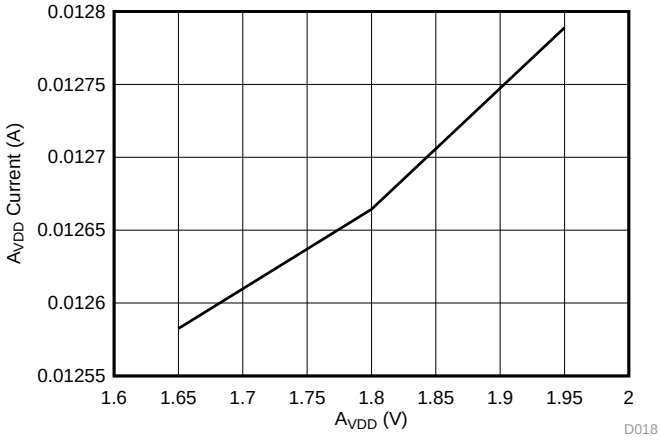

A_{VDD} = 1.65 V – 1.95 V IV Sense Enabled

Figure 21. A_{VDD} Idle Current vs A_{VDD}

Copyright © 2017–2018, Texas Instruments Incorporated

Typical Characteristics (continued)

At T_A = 25°C, f_{SPK_AMP} = 384 kHz, input signal is 1 kHz Sine, unless otherwise noted. Filter used for Load Resistance is 30 µH, unless otherwise noted.

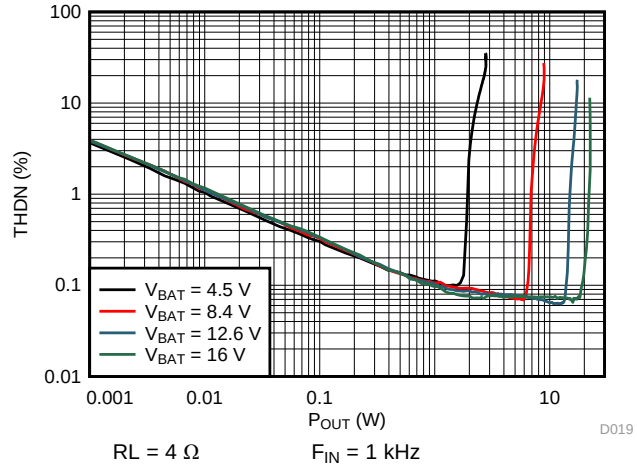

RL = 4 Ω F_{IN} = 1 kHz

Figure 22. I_{SENSE} THD+N vs Output Power

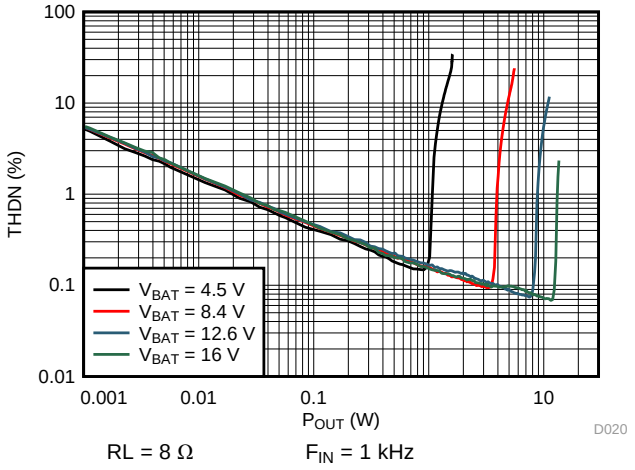

RL = 8 Ω F_{IN} = 1 kHz

Figure 23. I_{SENSE} THD+N vs Output Power

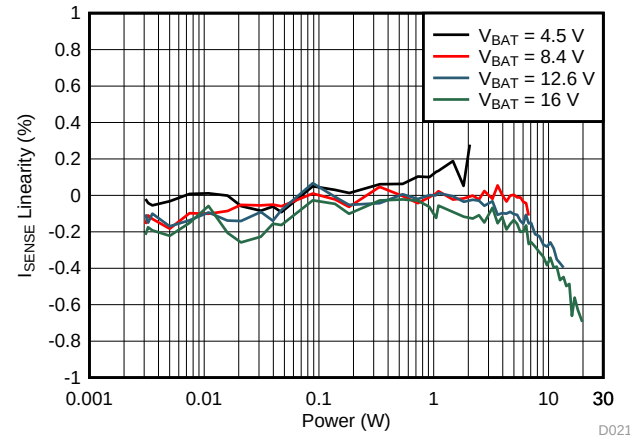

RL = 4 Ω Pilot tone = 40 Hz, 34 dB

Figure 24. I_{SENSE} Gain Linearity vs Output Power

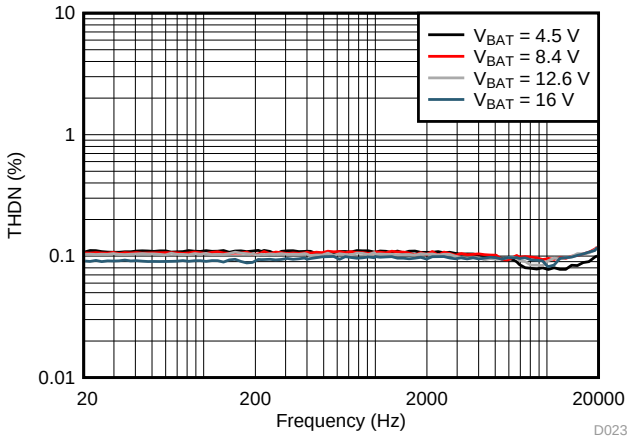

F_{IN} = 20 Hz – 20 kHz P_{OUT} = 1 W

Figure 25. I_{SENSE} THD+N vs Frequency

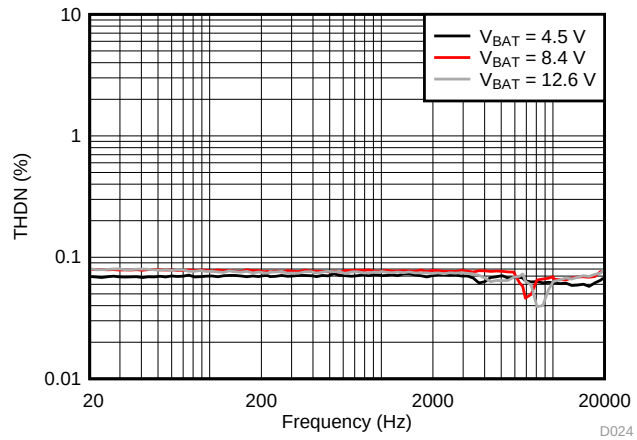

F_{IN} = 20 Hz – 20 kHz P_{OUT} = 1 W

Figure 26. I_{SENSE} THD+N vs Frequency

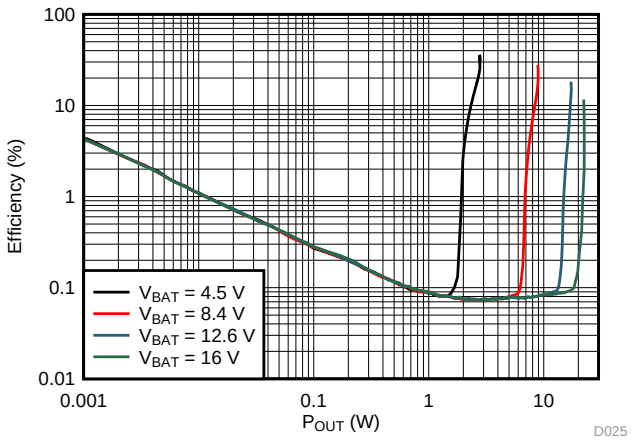

RL = 4 Ω

Figure 27. V_{SENSE} THD+N vs Output Power

Typical Characteristics (continued)

At T_A = 25°C, f_{SPK_AMP} = 384 kHz, input signal is 1 kHz Sine, unless otherwise noted. Filter used for Load Resistance is 30 µH, unless otherwise noted.

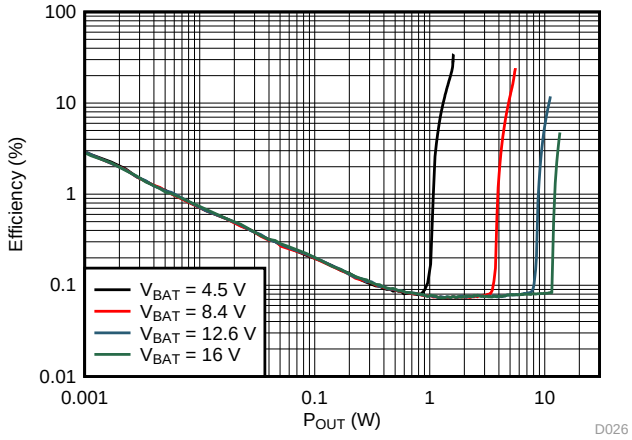

RL = 8 Ω

Figure 28. V_{SENSE} THD+N vs Output Power

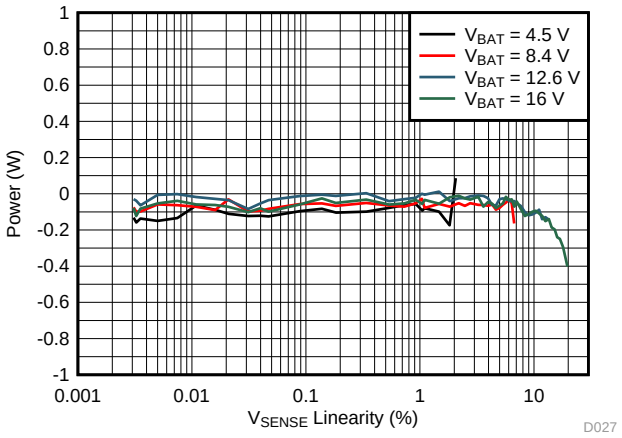

RL = 4 Ω Pilot tone = 40 Hz, 34 dB

Figure 29. Output Power vs V_{SENSE} Linearity

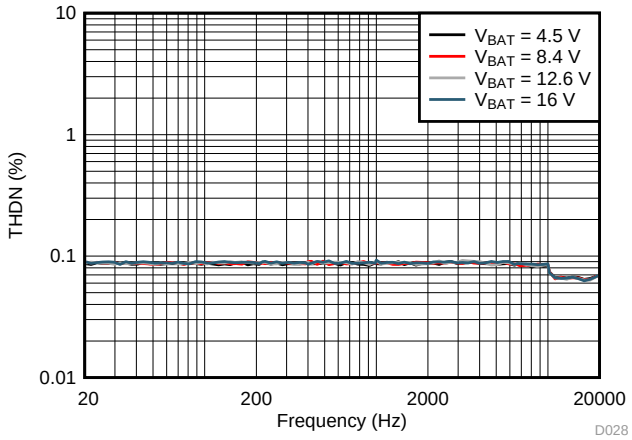

F_{IN} = 20 Hz – 20 kHz P_{OUT} = 1 W

Figure 30. V_{SENSE} THD+N vs Frequency

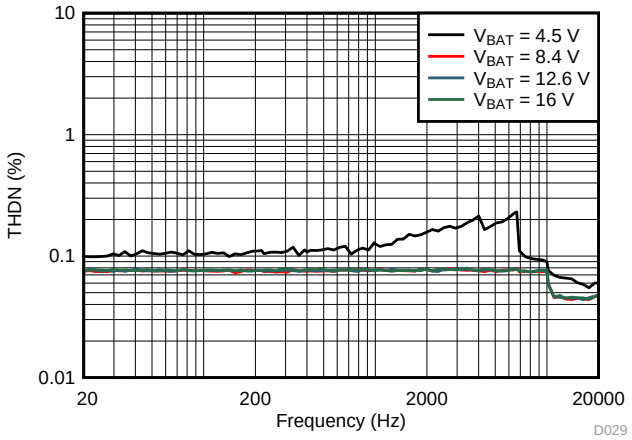

F_{IN} = 20 Hz – 20 kHz P_{OUT} = 1 W

Figure 31. V_{SENSE} THD+N vs Frequency

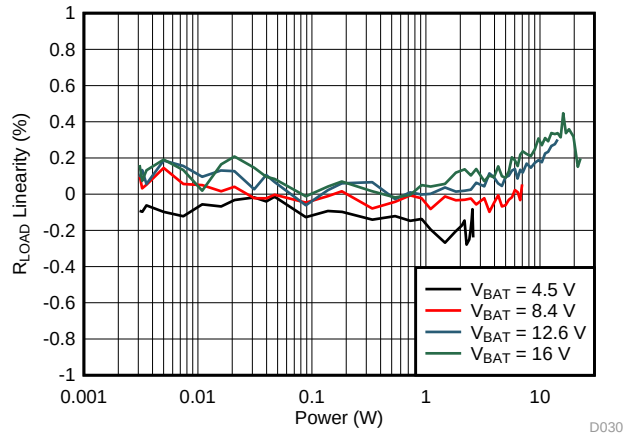

RL = 4 Ω + 30 µH Pilot tone = 40 Hz, 34 dB

Figure 32. V/I$_{SENSE}$ Gain Linearity vs Output Power

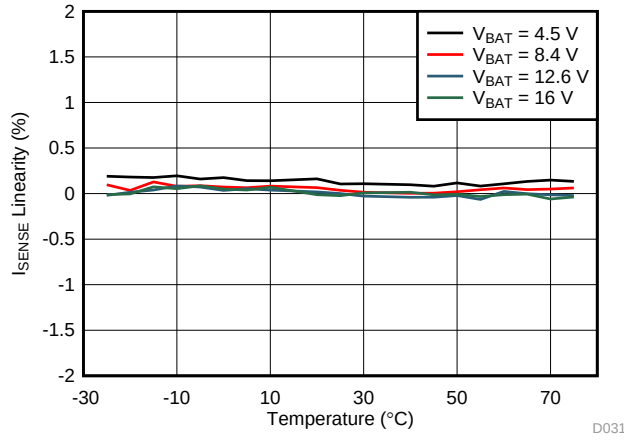

T_A = –20°C – 70ºC Pilot tone = 40 Hz, 34 dB

Figure 33. I_{SENSE} Gain Deviation vs Temperature

Copyright © 2017–2018, Texas Instruments Incorporated

Typical Characteristics (continued)

At T_A = 25°C, f_{SPK_AMP} = 384 kHz, input signal is 1 kHz Sine, unless otherwise noted. Filter used for Load Resistance is 30 µH, unless otherwise noted.

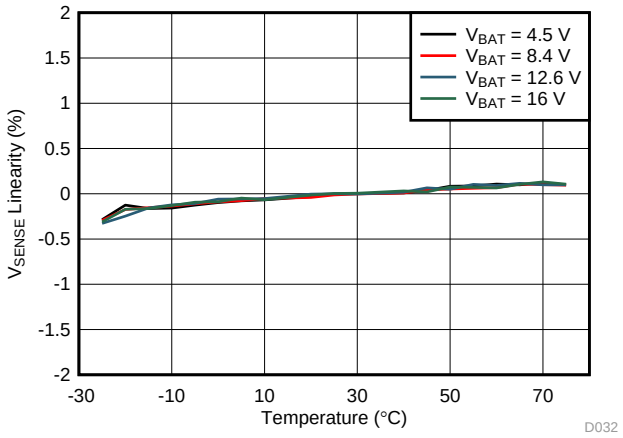

T_A = –20°C – 70ºC Pilot tone = 40 Hz, 34 dB

Figure 34. V_{SENSE} Gain Deviation vs Temperature

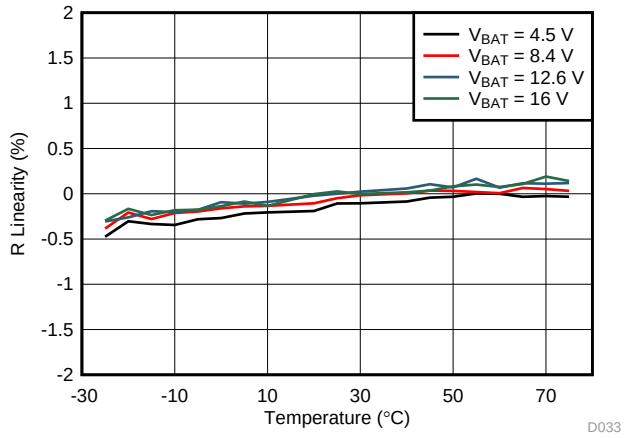

T_A = –20°C – 70ºC Pilot tone = 40 Hz, 34 dB

Figure 35. V/I_{SENSE} Gain Deviation vs Temperature

7 Parameter Measurement Information

All typical characteristics for the devices are measured using the Bench EVM and an Audio Precision SYS-2722 Audio Analyzer. A PSIA interface is used to allow the I^2S interface to be driven directly into the SYS-2722. Speaker output terminals are connected to the Audio-Precision analyzer analog inputs through a differential-to-single ended(D2S) filter as shown below. The D2S filter contains a 1st order Passive pole at 120 kHz. The D2S filter ensures the TAS2770 high performance class-D amplifier sees a fully differential matched loading at its outputs. This prevents measurement errors due to loading effects of AUX-0025 filter on the class-D outputs.

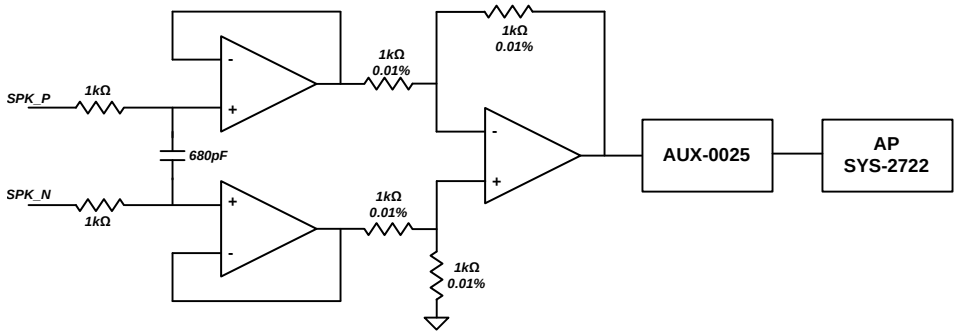

Figure 36. Differential To Single Ended (D2S) Filter

8 Detailed Description

8.1 Overview

The TAS2770 is a mono digital input Class-D amplifier optimized for mobile applications where efficient battery operation and small solution size are crucial. It integrates speaker voltage and current sensing and battery tracking limiting with brown out prevention. The device can operate in either TDM/I^{2}C mode. Both modes support two PDM inputs that can be used for low latency playback or sensor aggregation.

8.2 Functional Block Diagram

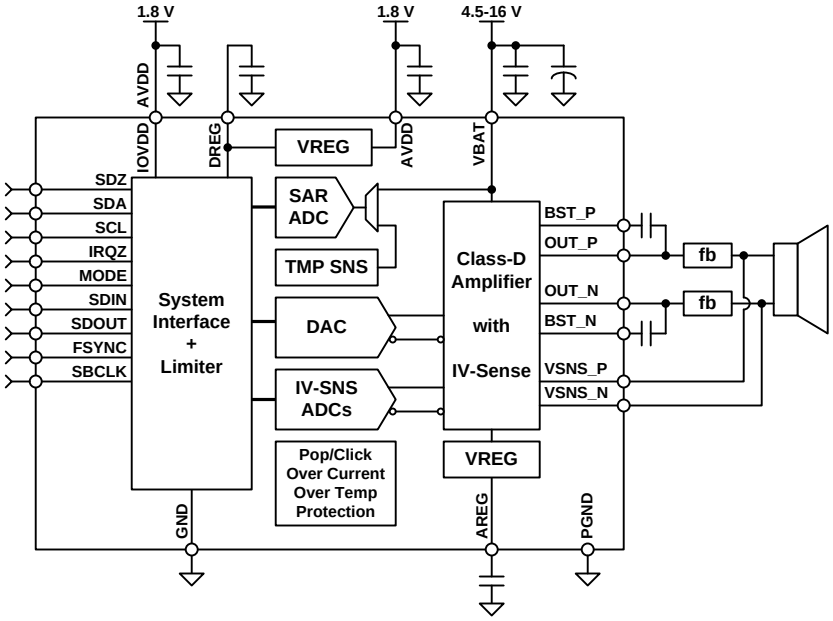

Copyright © 2016, Texas Instruments Incorporated

8.3 Feature Description

8.3.1 Device Mode and Address Selection

The TAS2770 can operate in two distinct operational modes, each with eight selectable device addresses. In TDM/I^{2}C Mode, audio input and output are provided via the FSYNC, SBCLK, SDIN and SDOUT pins using formats including I^{2}S, Left Justified and TDM. Configuration and status are provided via the SDA and SCL pins using the I^{2}C protocol.

The PDM input can be used for a low latency playback path or as a sensor input.

Table 1 below illustrates how to configure the device for TDM/I^{2}C Mode. I^{2}C slave addresses are shown left shifted by one bit with the R/W bit set to 0 (i.e. {ADDR[6:0],1b0}). 5% or better tolerance resistors should be used for setting the mode configuration.

Table 1. TDM/I^{2}C Mode Address Selection

MODE PIN	I2C SLAVE ADDRESS
	TAS2770
Short to GND	0x82
470 Ω to GND	0X84
470 Ω to IOVDD	0x86
2.2 KΩ to GND	0x88
2.2 KΩ to IOVDD	0x8A
10 KΩ to GND	0x8C

Copyright © 2017–2018, Texas Instruments Incorporated

Feature Description (continued)

Table 1. TDM/I²C Mode Address Selection (continued)

MODE PIN	I2C SLAVE ADDRESS
	TAS2770
10 KΩ to IOVDD	0x8E
47 KΩ to IOVDD	0x90

8.3.2 General I²C Operation

The I²C bus employs two signals, SDA (data) and SCL (clock), to communicate between integrated circuits in a system using serial data transmission. The address and data 8-bit bytes are transferred most-significant bit (MSB) first. In addition, each byte transferred on the bus is acknowledged by the receiving device with an acknowledge bit. Each transfer operation begins with the master device driving a start condition on the bus and ends with the master device driving a stop condition on the bus. The bus uses transitions on the data terminal (SDA) while the clock is at logic high to indicate start and stop conditions. A high-to-low transition on SDA indicates a start, and a low-to-high transition indicates a stop. Normal data-bit transitions must occur within the low time of the clock period. shows a typical sequence.

The master generates the 7-bit slave address and the read/write (R/W) bit to open communication with another device and then waits for an acknowledge condition. The device holds SDA low during the acknowledge clock period to indicate acknowledgment. When this occurs, the master transmits the next byte of the sequence. Each device is addressed by a unique 7-bit slave address plus R/W bit (1 byte). All compatible devices share the same signals via a bi-directional bus using a wired-AND connection.

Use external pull-up resistors for the SDA and SCL signals to set the logic-high level for the bus. Use pull-up resistors between 2 kΩ and 4.7 kΩ. Do not allow the SDA and SCL voltages to exceed the device supply voltage, IOVDD.

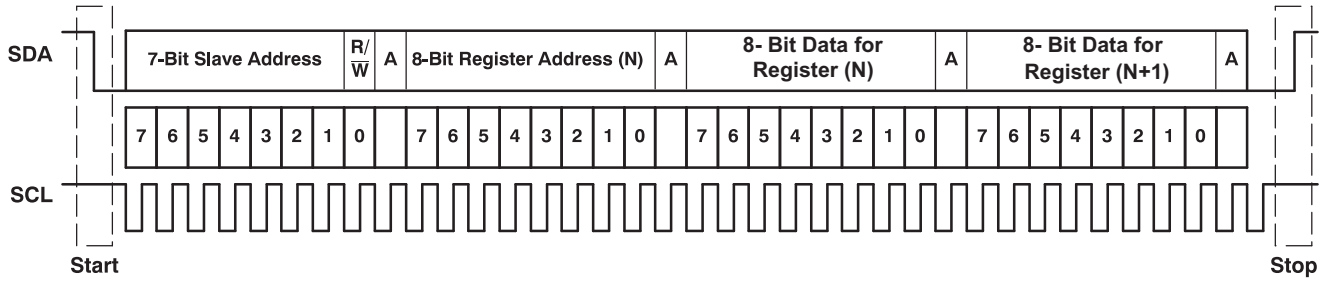

Figure 37. Typical I²C Sequence

There is no limit on the number of bytes that can be transmitted between start and stop conditions. When the last word transfers, the master generates a stop condition to release the bus. Figure 37shows a generic data transfer sequence.

8.3.3 Single-Byte and Multiple-Byte Transfers

The serial control interface supports both single-byte and multiple-byte read/write operations for all registers. During multiple-byte read operations, the TAS2770 responds with data, a byte at a time, starting at the register assigned, as long as the master device continues to respond with acknowledges.

The TAS2770 supports sequential I²C addressing. For write transactions, if a register is issued followed by data for that register and all the remaining registers that follow, a sequential I²C write transaction has taken place. For I²C sequential write transactions, the register issued then serves as the starting point, and the amount of data subsequently transmitted, before a stop or start is transmitted, determines to how many registers are written.

Copyright © 2017–2018, Texas Instruments Incorporated

8.3.4 Single-Byte Write

As shown in Figure 38, a single-byte data-write transfer begins with the master device transmitting a start condition followed by the I²C device address and the read/write bit. The read/write bit determines the direction of the data transfer. For a write-data transfer, the read/write bit must be set to 0. After receiving the correct I²C device address and the read/write bit, the TAS2770 responds with an acknowledge bit. Next, the master transmits the register byte corresponding to the device internal memory address being accessed. After receiving the register byte, the device again responds with an acknowledge bit. Finally, the master device transmits a stop condition to complete the single-byte data-write transfer.

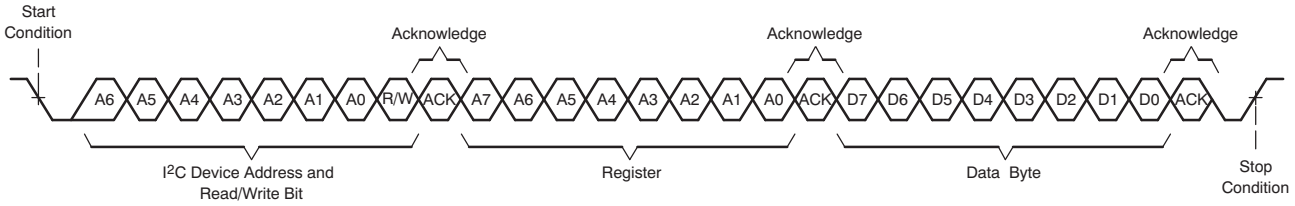

Figure 38. Single-Byte Write Transfer

8.3.5 Multiple-Byte Write and Incremental Multiple-Byte Write

A multiple-byte data write transfer is identical to a single-byte data write transfer except that multiple data bytes are transmitted by the master device to the TAS2770 as shown in Figure 39. After receiving each data byte, the device responds with an acknowledge bit.

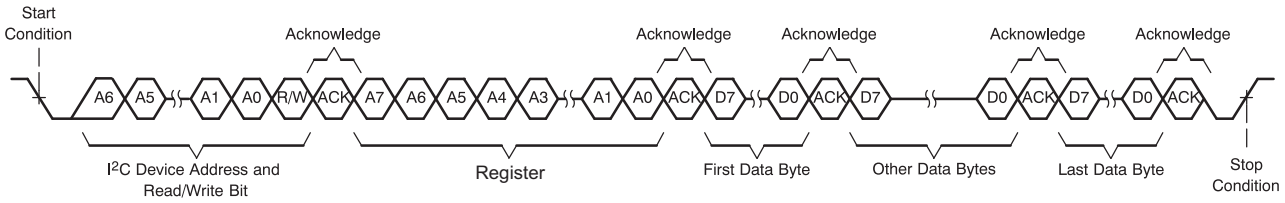

Figure 39. Multi-Byte Write Transfer

8.3.6 Single-Byte Read

As shown in Figure 40, a single-byte data-read transfer begins with the master device transmitting a start condition followed by the I²C device address and the read/write bit. For the data-read transfer, both a write followed by a read are actually done. Initially, a write is done to transfer the address byte of the internal memory address to be read. As a result, the read/write bit is set to a 0.

After receiving the TAS2770 address and the read/write bit, the device responds with an acknowledge bit. The master then sends the internal memory address byte, after which the device issues an acknowledge bit. The master device transmits another start condition followed by the TAS2770 address and the read/write bit again. This time, the read/write bit is set to 1, indicating a read transfer. Next, the TAS2770 transmits the data byte from the memory address being read. After receiving the data byte, the master device transmits a not-acknowledge followed by a stop condition to complete the single-byte data read transfer.

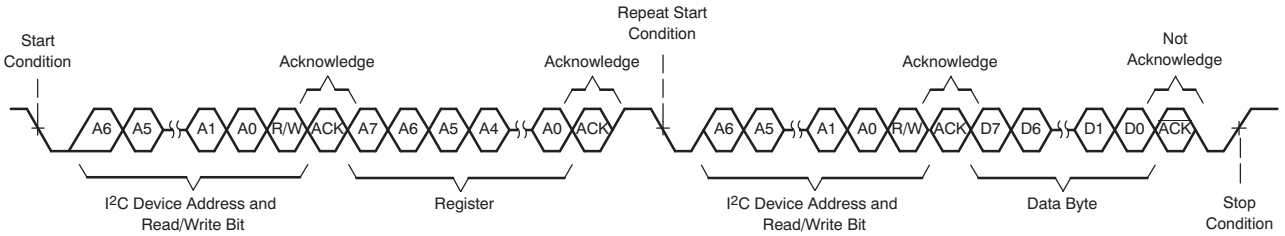

Figure 40. Single-Byte Read Transfer

Copyright © 2017–2018, Texas Instruments Incorporated

8.3.7 Multiple-Byte Read

A multiple-byte data-read transfer is identical to a single-byte data-read transfer except that multiple data bytes are transmitted by the TAS2770 to the master device as shown in Figure 41. With the exception of the last data byte, the master device responds with an acknowledge bit after receiving each data byte.

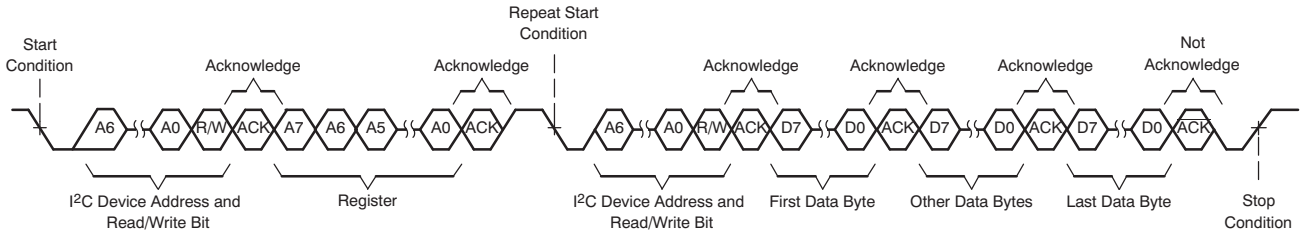

Figure 41. Multi-Byte Read Transfer

8.3.8 Register Organization

Device configuration and coefficients are stored using a page and book scheme. Each page contains 128 bytes and each book contains 256 pages. All device configuration registers are stored in book 0, page 0, which is the default setting at power up (and after a software reset). The book and page can be set by the *BOOK[7:0]* and *PAGE[7:0]* registers respectively.

8.4 Device Functional Modes

8.4.1 PDM Input

The TAS2770 provides one PDM input that can be used for low latency audio playback or sensor aggregation in TDM/I²C mode. Figure 42 below illustrates the double data rate nature of the PDM inputs. Each input has two interleaved PDM channels, one sampled by the rising edge and the other by the falling edge of the clock.

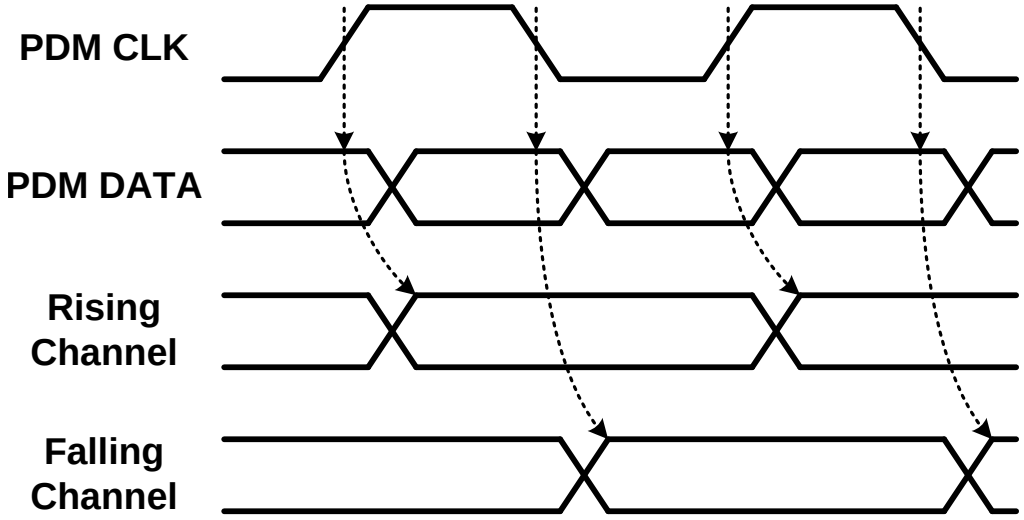

Figure 42. PDM Waveform

The PDM inputs are sampled by the PDMCK pin, which can be independently configured as either a PDM clock slave input or a PDM clock master output. The *PDM_EDGE[1:0]* and *PDM_SLV[1:0]* register bits select the sample clock edge and master/slave mode for each of the two PDM inputs. In master mode the PDMCK pin can disable the clocks (and drive a logic 0) by setting the *PDM_GATE[1:0]* register bits low. The *PDM_CLK[1:0]* register bits select which clock is used to sample each PDM input.

Copyright © 2017–2018, Texas Instruments Incorporated

Device Functional Modes (continued)

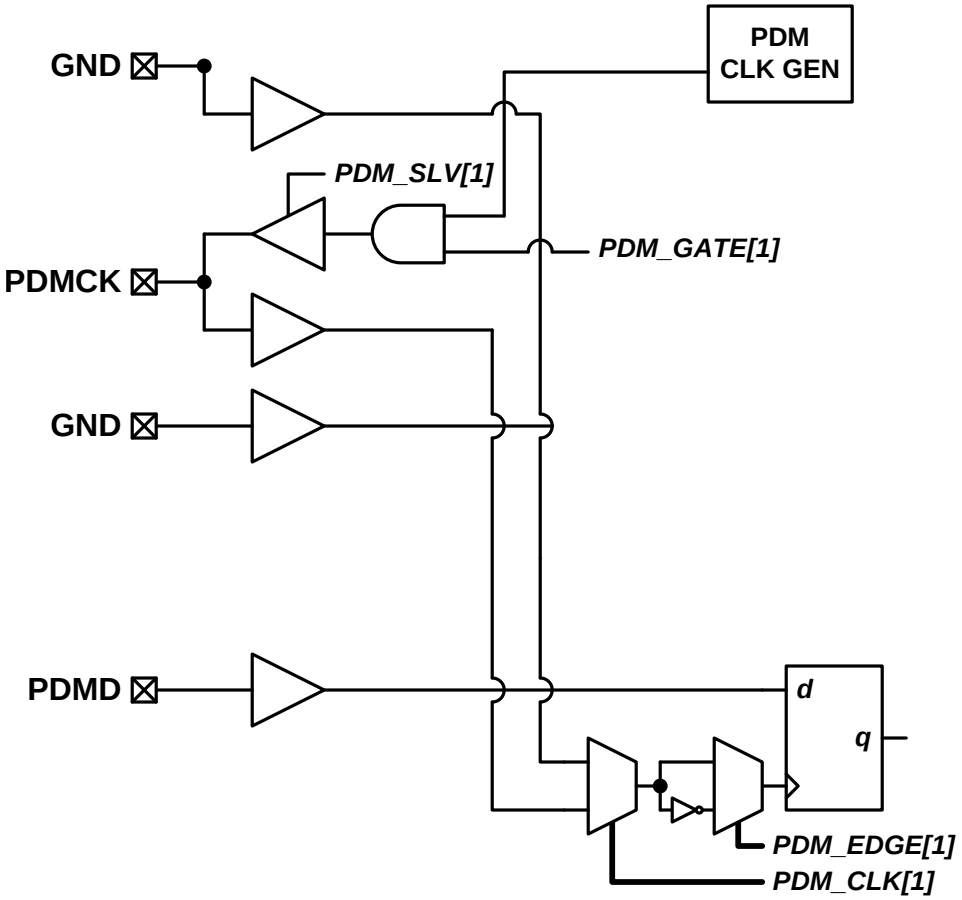

Figure 43. PDM Data and Clock Input Block Diagram

When configured as a clock slave, the PDM clock input does not require a specific phase relationship to the system clock (SBCLK in TDM/I^{2}C Mode), but must have an exact frequency relationship to the audio sample rate. This is equivalent to 64/32/16 (~3 MHz) or 128/64/32 (~6 MHz) times a single/double/quadruple speed sample rate. The PDM rate is set by the *PDM_RATE1[1:0]* register bits.

When the PDMCK pin is configured as a clock master, the TAS2770 will output a 50% duty cycle clock of frequency that is set by the *PDM_RATE1[1:0]* register bits (64/32/16 or 128/64/32 times a single/double/quadruple speed sample rate).

The *PDM_MAP* register bit selects which PDM pin is used for audio playback input and which is used for PDM sensor input. The PDM sensor input can be decimated (time aligned with the IV sense) and transmitted on the SDOUT pin when the device is in TDM/I^{2}C mode.

Table 2. PDM Input Capture Edge

PDM Input Pin	Register Bit	Value	Capture Edge
PDMD	*PDM_EDGE[1]*	0	Rising (default)
		1	Falling

Table 3. PDM Clock Slave

PDM Input Pin	Register Bit	Value	Master/Slave
PDMD	*PDM_SLV[1]*	0	Slave (default)
		1	Master

Copyright © 2017–2018, Texas Instruments Incorporated

Table 4. PDM Clock Select

PDM Input Pin	Register Bit	Value	Clock Source
PDMD	*PDM_CLK[1]*	0	GND
		1	PDMCK (default)

Table 5. PDM Master Mode Clock Gate

PDM Clock Pin	Register Bit	Value	Gating
PDMCK	*PDM_GATE[1]*	0	Gated Off (default)
		1	Active

Table 6. PDM Input Sample Rate

PDM Input Pin	Register Bits	Value	Sample Rate
PDMD	*PDM_RATE1[1:0]*	00	2.54 - 3.38 MHz (default)
		01	5.08 - 6.76 MHz
		10	Reserved
		11	Reserved

Table 7. PDM Pin Mapping

PDM_MAP	Mapping
0	PDMD pin for sensor input (default)
1	PDMD pin for playback

8.4.2 TDM Port

The TAS2770 provides a flexible TDM serial audio port for use in TDM/I^2C Mode. The port can be configured to support a variety of formats including stereo I^2S, Left Justified and TDM. Mono audio playback is available via the SDIN pin. The SDOUT pin is used to transmit sample streams including speaker voltage and current sense, VBAT voltage, die temperature and channel gain.

The TDM serial audio port supports up to 8 32-bit time slots at 44.1/48 kHz, 4 32-bit time slots at a 88.2/96 kHz sample rate and 2 32-bit time slots at a 176.4/192 kHz sample rate. The device supports 2 time slots at 32 bits in width and 4 or 8 time slots at 16, 24 or 32 bits in width. Valid SBCLK to FSYNC ratios are 64, 96, 128, 192, and 256.. Note that the device will automatically detect the number of time slots and this does not need to be programmed.

By default, the TAS2770 will automatically detect the PCM playback sample rate. This can be disabled by setting the *AUTO_RATE* register bit high.

The *SAMP_RATE[2:0]* register bits set the PCM audio sample rate when *AUTO_RATE* = 1. The TAS2770 employs a robust clock fault detection engine that will automatically volume ramp down the playback path if FSYNC does not match the configured sample rate (if *AUTO_RATE* = 1) or the ratio of SBCLK to FSYNC is not supported (minimizing any audible artifacts). Once the clocks are detected to be valid in both frequency and ratio, the device will automatically volume ramp the playback path back to the configured volume and resume playback.

Table 8. PCM Auto Sample Rate Detection

AUTO_RATE	Setting
0	Enabled (default)
1	Disabled

Copyright © 2017–2018, Texas Instruments Incorporated

Table 9. PCM Audio Sample Rates

SAMP_RATE[1:0]	Sample Rate
000	Reserved
001	Reserved
010	Reserved
011	44.1 kHz / 48 kHz (default)
100	88.2 kHz / 96 kHz
101	176.4 kHz / 192 kHz
110	Reserved
111	Reserved

Figure 44 and Figure 45 below illustrates the receiver frame parameters required to configure the port for playback. A frame begins with the transition of FSYNC from either high to low or low to high (set by the *FRAME_START* register bit). FSYNC and SDIN are sampled by SBCLK using either the rising or falling edge (set by the *RX_EDGE* register bit). The *RX_OFFSET[4:0]* register bits define the number of SBCLK cycles from the transition of FSYNC until the beginning of time slot 0. This is typically set to a value of 0 for Left Justified format and 1 for an I^2S format.

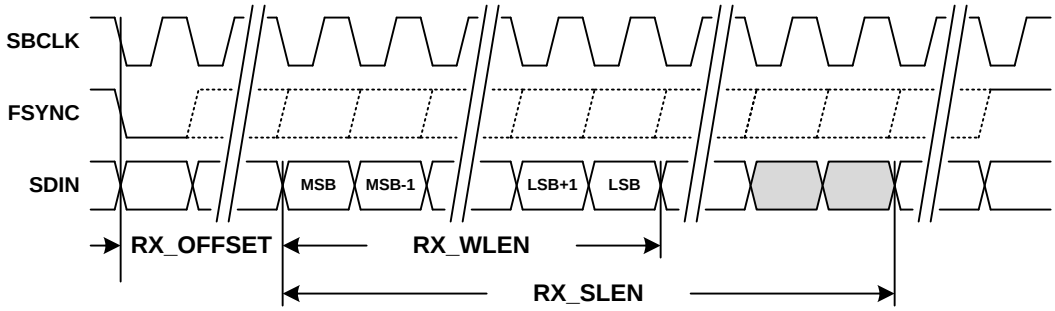

Figure 44. TDM RX Time Slot with Left Justification

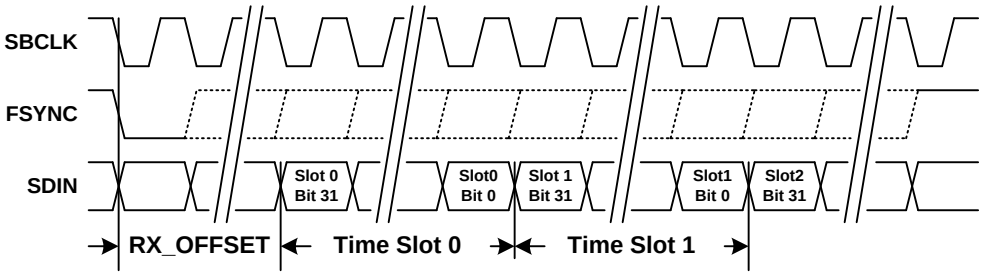

Figure 45. TDM RX Time Slots

Table 10. TDM Start of Frame Polarity

FRAME_START	Polarity
0	Low to High on FSYNC
1	High to Low on FSYNC (default)

Table 11. TDM RX Capture Polarity

RX_EDGE	FSYNC and SDIN Capture Edge
0	Rising edge of SBCLK (default)
1	Falling edge of SBCLK

Copyright © 2017–2018, Texas Instruments Incorporated

Table 12. TDM RX Start of Frame to Time Slot 0 Offset

RX_OFFSET[4:0]	SBCLK Cycles
0x00	0
0x01	1 (default)
0x02	2
...	...
0x1E	30
0x1F	31

The *RX_SLEN[1:0]* register bits set the length of the RX time slot. The length of the audio sample word within the time slot is configured by the *RX_WLEN[1:0]* register bits. The RX port will left justify the audio sample within the time slot by default, but this can be changed to right justification via the *RX_JUSTIFY* register bit. The TAS2770 supports mono and stereo down mix playback ([L+R]/2) via the left time slot, right time slot and time slot configuration register bits (*RX_SLOT_L[3:0]*, *RX_SLOT_R[3:0]* and *RX_SCFG[1:0]* respectively). By default the device will playback mono from the time slot equal to the I^2C base address offset (set by the MODE pin) for playback. The *RX_SCFG[1:0]* register bits can be used to override the playback source to the left time slot, right time slot or stereo down mix set by the *RX_SLOT_L[3:0]* and *RX_SLOT_R[3:0]* register bits.

If time slot selections places reception either partially or fully beyond the frame boundary, the receiver will return a null sample equivalent to a digitally muted sample.

Table 13. TDM RX Time Slot Length

RX_SLEN[1:0]	Time Slot Length
00	16-bits
01	24-bits
10	32-bits (default)
11	reserved

Table 14. TDM RX Sample Word Length

RX_WLEN[1:0]	Length
00	16-bits
01	20-bits
10	24-bits (default)
11	32-bits

Table 15. TDM RX Sample Justification

RX_JUSTIFY	Justification
0	Left (default)
1	Right

Table 16. TDM RX Time Slot Select Configuration

RX_SCFG[1:0]	Config Origin
00	Mono with Time Slot equal to I^2C Address Offset (default)
01	Mono Left Channel
10	Mono Right Channel
10	Stereo Down Mix [L+R]/2

Table 17. TDM RX Left Channel Time Slot

RX_SLOT_L[3:0]	Time Slot
0x0	0 (default)
0x1	1

Copyright © 2017–2018, Texas Instruments Incorporated

Table 17. TDM RX Left Channel Time Slot (continued)

RX_SLOT_L[3:0]	Time Slot
...	...
0xE	14
0xF	15

Table 18. TDM RX Right Channel Time Slot

RX_SLOT_R[3:0]	Time Slot
0x0	0 (default)
0x1	1
...	...
0xE	14
0xF	15

The TDM port can transmit a number sample streams on the SDOUT pin including speaker voltage sense, speaker current sense, decimated PDM input, VBAT voltage, die temperature and channel gain. Figure 46 below illustrates the alignment of time slots to the beginning of a frame and how a given sample stream is mapped to time slots. Either the rising or falling edge of SBCLK can be used to transmit data on the SDOUT pin, which can be configured by setting the *TX_EDGE* register bit. The *TX_OFFSET[2:0]* register bits define the number SBCLK cycles between the start of a frame and the beginning of time slot 0. This would typically be programmed to 0 for Left Justified format and 1 for I^2S format. The TDM TX can either transmit logic 0 or Hi-Z depending on the setting of the *TX_FILL* register bit setting. An optional bus keeper will weakly hold the state of SDOUT when all devices driving are Hi-Z. Since only one bus keeper is required on SDOUT, this feature can be disabled via the *TX_KEEPER* register bit.

Each sample stream is composed of either one or two 8-bit time slots. Speaker voltage sense, speaker current sense and decimated PDM sample streams are 16-bit precision, so they will always utilize two TX time slots. The VBAT voltage stream is 12-bit precision, and can either be transmitted left justified in a 16-bit word (using two time slots) or can be truncated to 8-bits (the top 8 MSBs) and be transmitted in a single time slot. This is configured by setting *VBAT_SLEN* register bit. The Die temperature and gain are both 8-bit precision and are transmitted in a single time slot.

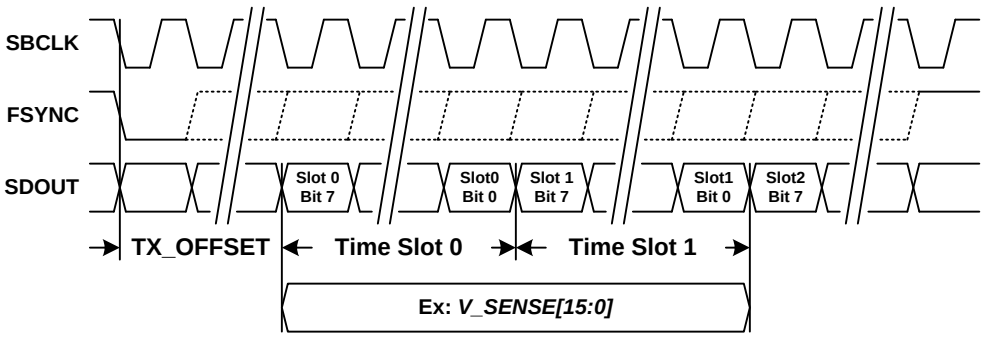

Figure 46. TDM Port TX Diagram

Table 19. TDM TX Transmit Polarity

TX_EDGE	SDOUT Transmit Edge
0	Rising edge of SBCLK
1	Falling edge of SBCLK (default)

Copyright © 2017–2018, Texas Instruments Incorporated

Table 20. TDM TX Start of Frame to Time Slot 0 Offset

TX_OFFSET[2:0]	SBCLK Cycles
0x0	0
0x1	1 (default)
0x2	2
...	...
0x6	6
0x7	7

Table 21. TDM TX Unused Bit Field Fill

TX_FILL	SDOUT Unused Bit Fields
0	Transmit 0
1	Transmit Hi-Z (default)

Table 22. TDM TX SDOUT Bus Keeper Enable

TX_KEEPER	SDOUT Bus Keeper
0	Disable bus keeper
1	Enable bus keeper (default)

The time slot register for each sample stream defines where the MSB transmission begins. For instance, if *VSNS_SLOT[5:0]* is set to 2, the upper 8 MSBs will be transmitted in time slot 2 and the lower 8 LSBs will be transmitted in time slot 3. Each sample stream can be individually enabled or disabled. This is useful to manage limited TDM bandwidth since it may not be necessary to transmit all streams for all devices on the bus.

It is important to ensure that time slot assignments for actively transmitted sample streams do not conflict. For instance, if *VSNS_SLOT[5:0]* is set to 2 and *ISNS_SLOT[5:0]* is set to 3, the lower 8 LSBs of voltage sense will conflict with the upper 8 MSBs of current sense. This will produce unpredictable transmission results in the conflicting bit slots (i.e. the priority is not defined).

If time slot selections place transmission beyond the frame boundary, the transmitter will truncate transmission at the frame boundary.

Table 23. TDM Voltage Sense Time Slot

VSNS_SLOT[5:0]	Slot
0x00	0 (default)
0x01	1
0x02	2
...	...
0x3E	62
0x3F	63

Table 24. TDM Voltage Sense Transmit Enable

VSNS_TX	State
0	Disabled (default)
1	Enabled

Table 25. TDM Current Sense Time Slot

ISNS_SLOT[5:0]	Slot
0x00	0
0x01	1
0x02	2 (default)
...	...

Copyright © 2017–2018, Texas Instruments Incorporated

Table 25. TDM Current Sense Time Slot (continued)

ISNS_SLOT[5:0]	Slot
0x3E	62
0x3F	63

Table 26. TDM Current Sense Transmit Enable

ISNS_TX	State
0	Disabled (default)
1	Enabled

Table 27. TDM Decimated PDM Input Time Slot

PDM_SLOT[5:0]	Slot
0x00	0
0x01	1
...	...
0x04	4 (default)
...	...
0x3E	62
0x3F	63

Table 28. TDM Decimated PDM Input Transmit Enable

PDM_TX	State
0	Disabled (default)
1	Enabled

Table 29. TDM VBAT Time Slot

VBAT_SLOT[5:0]	Slot
0x00	0
0x01	1
...	...
0x06	6 (default)
...	...
0x3E	62
0x3F	63

Table 30. TDM VBAT Time Slot Length

VBAT_SLEN	Slot Length
0	Truncate to 8-bits (default)
1	Left justify to 16-bits

Table 31. TDM VBAT Transmit Enable

VBAT_TX	State
0	Disabled (default)
1	Enabled

Copyright © 2017–2018, Texas Instruments Incorporated

Table 32. TDM Temp Sensor Time Slot

TEMP_SLOT[5:0]	Slot
0x00	0
0x01	1
...	...
0x07	7 (default)
...	...
0x3E	62
0x3F	63

Table 33. TDM Temp Sensor Transmit Enable

TEMP_TX	State
0	Disabled (default)
1	Enabled

Table 34. TDM Limiter Gain Reduction Time Slot

GAIN_SLOT[5:0]	Slot
0x00	0
0x01	1
...	...
0x08	8 (default)
...	...
0x3E	62
0x3F	63

Table 35. TDM Limiter Gain Reduction Transmit Enable

GAIN_TX	State
0	Disabled (default)
1	Enabled

8.4.3 Playback Signal Path

8.4.3.1 High Pass Filter

Excessive DC and low frequency content in audio playback signal can damage loudspeakers, so the TAS2770 employs a high-pass filter (HPF) to prevent this from occurring for the PCM playback path. No HPF is available in the PDM playback path. Table 36 below shows the -3 dB corner frequencies available for each sample rate set by register bits *HPF_FREQ[2:0]*. The filter can be bypassed by setting the *HPF_FREQ[2:0]* register to 3'b000. The HPF Bi-Quad filter coefficients can also be directly programmed via the TBD register bits.

Table 36. HPF Filter Settings

HPF_FREQ[2:0]	-3 dB FREQUENCY (Hz)	
	44.1/88.2/176.4 kHz	48/96/192 kHz
000	bypass	bypass
001	1.8 (default)	2 (default)
010	46	50
011	92	100
100	184	200
101	368	400
110	735	800
111	Reserved	Reserved

Copyright © 2017–2018, Texas Instruments Incorporated

8.4.3.2 Digital Volume Control and Amplifier Output Level

The gain from audio input to speaker terminals is controlled by setting the amplifier's output level and digital volume control (DVC). A separate DVC is provided for PDM (available from the PDM input pins) and PCM (available from the TDM ports pins) playback paths.

Amplifier output level settings are presented in dBV (dB relative to 1 V_{rms}) with a full scale digital audio input (0 dBFS) and the digital volume control set to 0 dB. It should be noted that these levels may not be achievable because of analog clipping in the amplifier, so they should be used to convey gain only. Table 37 below shows analog gain settings that can be programmed via the *AMP_LEVEL[4:0]* register bits.

Table 37. Amplifier Output Level Settings

AMP_LEVEL[4:0]	FULL SCALE OUTPUT	
	dBV	V_{PEAK} (V)
0x00	11.0	5.02
0x01	11.5	5.32
0x02	12.0	5.63
0x03	12.5	5.96
0x04	13.0	6.32
0x05	13.5	6.69
0x06	14.0	7.09
0x07	14.5	7.51
0x08	15.0	7.95
0x09	15.5	8.42
0x0A	16.0	8.92
0x0B	16.5	9.45
0x0C	17.0	10.0
0x0D	17.5	10.6
0x0E	18.0	11.2
0x0F	18.5	11.9
0x10	19.0 (default)	12.6 (default)
0x11	19.5	13.4
0x12	20.0	14.1
0x13	20.5	14.98
0x14	21.0	15.87
0x15 - 0x1F	Reserved	Reserved

Equation 1 calculates the amplifiers output voltage.

$$V_{AMP} = \text{Input} + A_{dvc} + A_{AMP} \quad \text{dBV} \tag{1}$$

where

- V_{AMP} is the amplifier output voltage in dBV
- Input is the digital input amplitude in dB with respect to 0 dBFS
- A_{dvc} is the digital volume control setting, 0 dB to -100 dB in 0.5 dB steps
- A_{AMP} is the amplifier output level setting in dBV

The digital volume control (DVC) is independently configurable for PCM and PDM streams from 0 dB to -100 dB in 0.5 dB steps by setting the *DVC_PCM[7:0]* and *PVC_PDM[7:0]* register bits respectively. Settings greater than 0xC8 are interpreted as mute. When a change in digital volume control occurs, the device ramps the volume to the new setting based on the *DVC_RATE[1:0]* register bits. If DVC_RATE[1:0] is set to 2'b11, volume ramping is disabled. This can be used to speed up startup, shutdown and digital volume changes when volume ramping is handled by the system master.

Copyright © 2017–2018, Texas Instruments Incorporated

Table 38. PCM Digital Volume Control

DVC_PCM[7:0]	Volume (dB)
0x00	0 (default)
0x01	-0.5
0x02	-1
...	...
0xC8	-100
0xC9 - 0xFF	Mute

Table 39. PDM Digital Volume Control

DVC_PDM[7:0]	Volume (dB)
0x00	0 (default)
0x01	-0.5
0x02	-1
...	...
0xC8	-100
0xC9 - 0xFF	Mute

Table 40. Digital Volume Ramp Rate

DVC_RAMP[1:0]	Ramp Rate
00	0.5 dB per 1 Sample (default)
01	0.5 dB per 4 Samples
10	0.5 dB per 8 Samples
11	Volume Ramping Disabled

The Class-D amplifier uses a closed-loop architecture, so the gain does not depend on VBAT. The approximate threshold for the onset of analog clipping is calculated in Equation 2.

$$V_{PK(max,preclip)} = VBAT \times \left(\frac{R_L}{R_{FET(tot)} + R_{interconnect} + R_L} \right) V$$

where

- $V_{PK(max,preclip)}$ is the maximum peak unclipped output voltage in V
- VBAT is the power supply voltage
- R_L is the speaker load in Ω
- $R_{interconnect}$ is the additional resistance in the PCB (such as cabling and filters) in Ω
- $R_{FET(on)}$ is the power stage total on resistance (HS FET+LS FET+Sense Resistor+bonding+packaging) in Ω (2)

The effective on-resistance for this device (including HS+LS FET, Sense Resistor and bonding and packaging leads) is approximately 510 mΩ at room temperature. Table 41 shows approximate maximum unclipped peak output voltages at room temperature (excluding interconnect resistances).

Table 41. Approximate Maximum Unclipped Peak Output Voltage at Room Temperature

SUPPLY VOLTAGE VBAT (V)	MAXIMUM UNCLIPPED PEAK VOLTAGE V_{PK} (V)	
	R_L = 4 Ω	R_L = 8 Ω
8.4	7.45	7.90
12.6	11.18	11.84

Copyright © 2017–2018, Texas Instruments Incorporated

8.4.3.3 Audio Playback Selection

Audio playback can be sourced from either PCM (via TDM) or PDM (via PDMD PDM Inputs) input sources via the *PB_SRC* register bit. The *PB_PDM_SRC* register bit determines the source of the PDM source.

Table 42. Audio Playback Source

PB_SRC	Source
0	PCM (default)
1	PDM

Table 43. PDM Playback Source

PB_PDM_SRC	Source
0	PDM input pin defined by PDM_MAP register bit (default)
1	Reserved

8.4.3.4 Battery Tracking Limiter with Brown Out Prevention

The TAS2770 monitors battery voltage (VBAT) and the audio signal to automatically decrease gain when the audio signal peaks exceed a programmable threshold. This helps prevent clipping and extends playback time through end of charge battery conditions. The limiter threshold can be configured to track VBAT below a programmable inflection point with a programmable slope. A minimum threshold sets the limit of threshold reduction from VBAT tracking. Configurable attack rate, hold time and release rate are provided to shape the dynamic response of the limiter (via *LIM_ATK_RT[2:0], LIM_HLD_TM[2:0] and LIM_RLS_RT[2:0]* register bits).

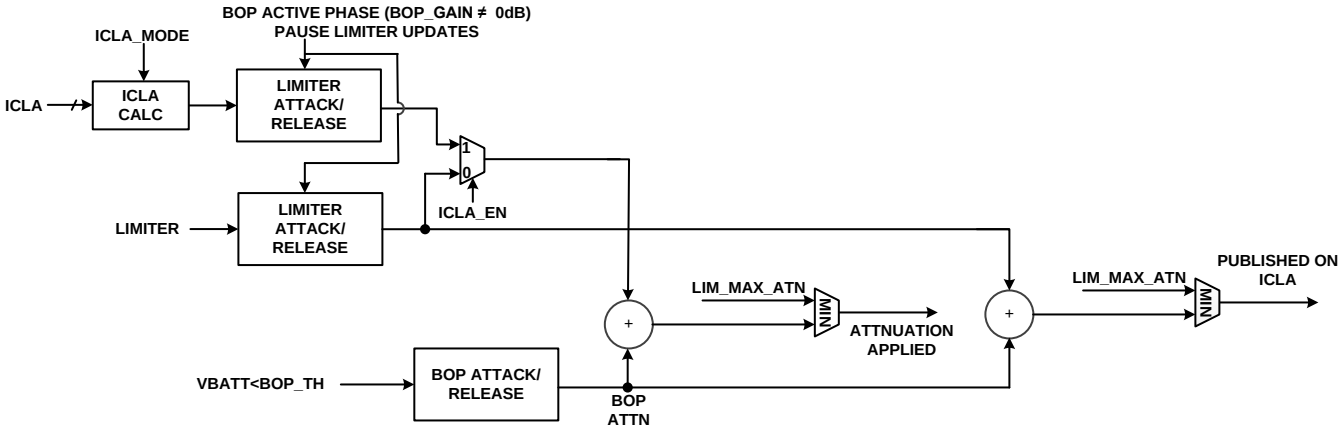

Figure 47. Limiter and Brown Out Prevention Interaction Diagram

A Brown Out Prevention (BOP) feature provides a priority input to the limiter to provide very fast response to transient dips in VBAT at end of charge conditions that can cause system level brown out. When VBAT dips below the BOP threshold, the limiter begins reducing gain with an attack latency of less than 10 µs and a configurable attack rate. When VBAT rises above the BOP threshold, the limiter will begin to release after the programmed hold time.

The limiter is enabled by setting the *LIM_EN* bit register bit high.

Table 44. Battery Tracking Limiter Enable

LIM_EN	Value
0	Disabled (default)
1	Enabled

Copyright © 2017–2018, Texas Instruments Incorporated

The limiter has configurable attack rate, hold time and release rate, which are available via the *LIM_ATK_RT[2:0]*, *LIM_HLD_TM[2:0]* and *LIM_RLS_RT[2:0]* register bits respectively. The limiter attack and release step size can be set by configuring the *LIM_ATK_ST[1:0]* and *LIM_RLS_ST[1:0]* register bits respectively.

Table 45. Limiter Attack Rate

LIM_ATK_RT[2:0]	Attack Rate (µs)
0x0	5
0x1	10
0x2	20 (default)
0x3	40
0x4	80
0x5	160
0x6	320
0x7	640

Table 46. Limiter Hold Time

LIM_HLD_TM[2:0]	Hold Time (ms)
0x0	0
0x1	10
0x2	25
0x3	50
0x4	100
0x5	250
0x6	500 (default)
0x7	1000

Table 47. Limiter Release Rate

LIM_RLS_RT[2:0]	Release Time (ms)
0x0	10
0x1	50
0x2	100
0x3	250
0x4	500
0x5	750
0x6	1000 (default)
0x7	1500

Table 48. Limiter Attack Step Size

LIM_ATK_ST[1:0]	Step Size (dB)
00	0.25
01	0.5 (default)
10	1
11	2

Table 49. Limiter Release Step Size

LIM_RLS_ST[1:0]	Step Size (dB)
00	0.25
01	0.5 (default)
10	1

Copyright © 2017–2018, Texas Instruments Incorporated

Table 49. Limiter Release Step Size (continued)

LIM_RLS_ST[1:0]	Step Size (dB)
11	2

A maximum level of attenuation applied by the limiter and brown out prevention feature is configurable via the *LIM_MAX_ATN[4:0]* register bits. This attenuation limit is shared between the features. For instance, if the maximum attenuation is set to 6 dB and the limiter has reduced gain by 4 dB, the brown out prevention feature will only be able to reduce the gain further by another 2 dB. If the limiter or brown out prevention feature is attacking and it reaches the maximum attenuation, gain will not be reduced any further.

Table 50. Limiter Max Attenuation

LIM_MAX_ATN[4:0]	Attenuation (dB)
0x00	1
0x01	1.5
...	...
0x10	9 (default)
...	...
0x1E	16
0x1F	16.5

The limiter begins reducing gain when the output signal level is greater than the limiter threshold. The limiter can be configured to track VBAT below a programmable inflection point with a minimum threshold value. Figure 48 below shows the limiter configured to limit to a constant level regardless of VBAT level. To achieve this behavior, set the limiter maximum threshold to the desired level via the *LIM_TH_MAX[6:0]* register bits. Set the limiter inflection point (via the *LIM_INF_PT[6:0]* register bits) below the minimum allowable VBAT setting. The limiter minimum threshold register bits (*LIM_TH_MIN[6:0]*) do not impact limiter behavior in this use case.

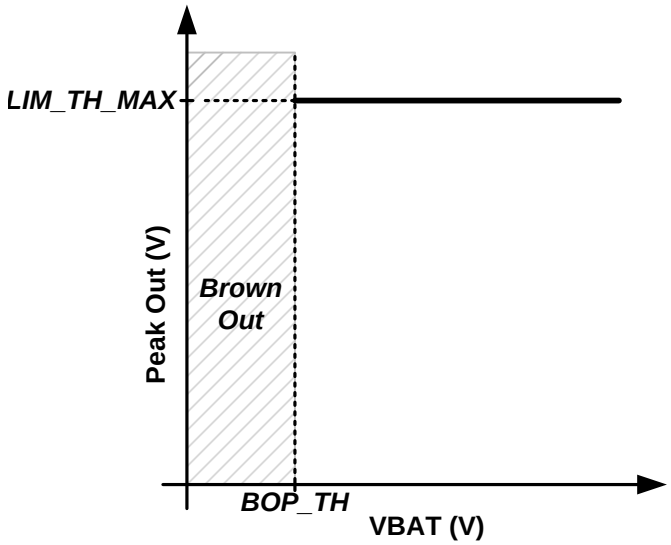

Figure 48. Limiter with Fixed Threshold

Table 51. Limiter Maximum Threshold

LIM_TH_MAX[6:0]	Threshold (V)
0x00	2
0x01	2.1
...	...
0x6E	13 (default)
...	...

Copyright © 2017–2018, Texas Instruments Incorporated

Table 51. Limiter Maximum Threshold (continued)

LIM_TH_MAX[6:0]	Threshold (V)
0x7E	14.6
0x7F	14.7

Table 52. Limiter Minimum Threshold

LIM_TH_MIN[6:0]	Threshold (V)
0x00	2
0x01	2.1
...	...
0x1E	5 (default)
...	...
0x7E	14.6
0x7F	14.7

Table 53. Limiter Inflection Point

LIM_INF_PT[6:0]	Inflection Point (V)
0x00	2
0x01	2.1
...	...
0x58	10.8 (default)
...	...
0x7E	14.6
0x7F	14.7

Figure 49 shows how to configure the limiter to track VBAT below a threshold without a minimum threshold. Set the *LIM_TH_MAX[6:0]* register bits to the desired threshold and *LIM_INF_PT[6:0]* register bits to the desired inflection point where the limiter will begin reducing the threshold with VBAT. The *LIM_SLOPE[1:0]* register bits can be used to change the slope of the limiter tracking with VBAT. The default value of 1 V/V will reduce the threshold 1 V for every 1 V of drop in VBAT. More aggressive tracking slopes can be programmed if desired. Program the *LIM_TH_MIN[6:0]* below the minimum VBAT to prevent the limiter from having a minimum threshold reduction when tracking VBAT.

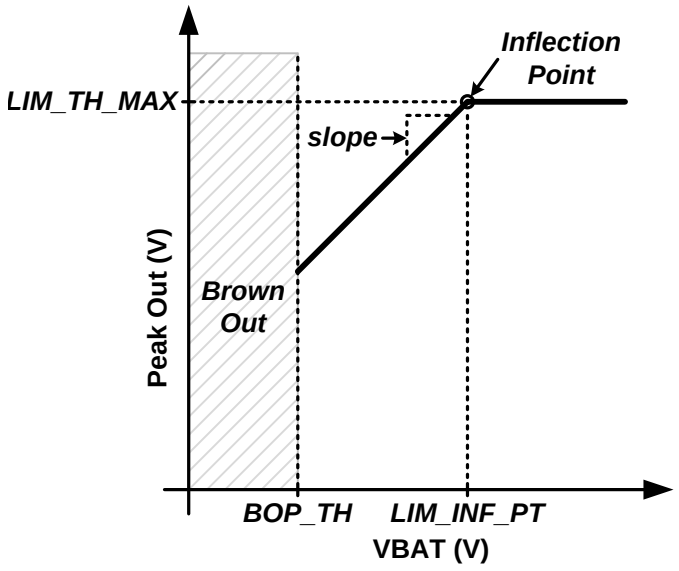

Figure 49. Limiter with Inflection Point

Table 54. Limiter VBAT Tracking Slope

LIM_SLOPE[1:0]	Slope (V/V)
00	1 (default)
01	1.5
10	2
11	4

To achieve a limiter that tracks VBAT below a threshold, configure the limiter as explained in the previous example, except program the *LIM_TH_MIN[6:0]* register bits to the desired minimum threshold. This is shown in Figure 50 below.

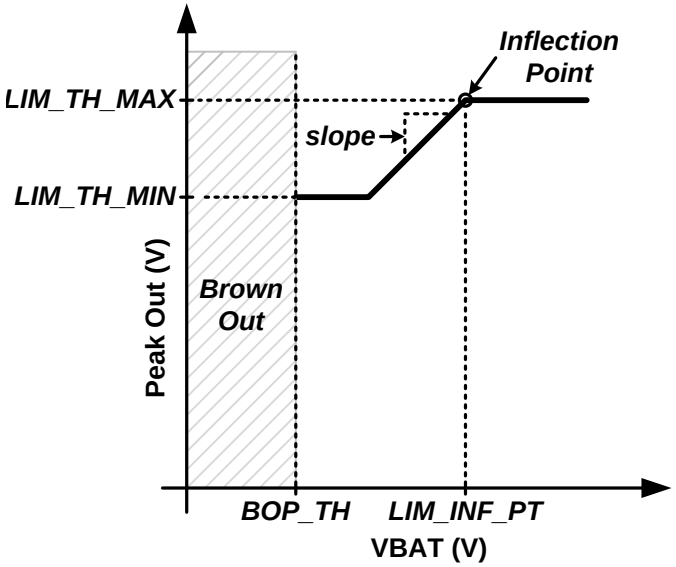

Figure 50. Limiter with Inflection Point and Minimum Threshold

The TAS2770 also employs a Brown Out Prevention (BOP) feature that serves as a low latency priority input to the limiter engine that begins attacking within 10 µs of VBAT dipping below the programmed BOP threshold. This feature can be enabled by setting the *BOP_EN* register bit high. It should be noted that the BOP feature is independent of the limiter and will function if enabled even if the limiter is disabled. The BOP threshold is configured by setting the threshold with register bits *BOP_TH[7:0]*.

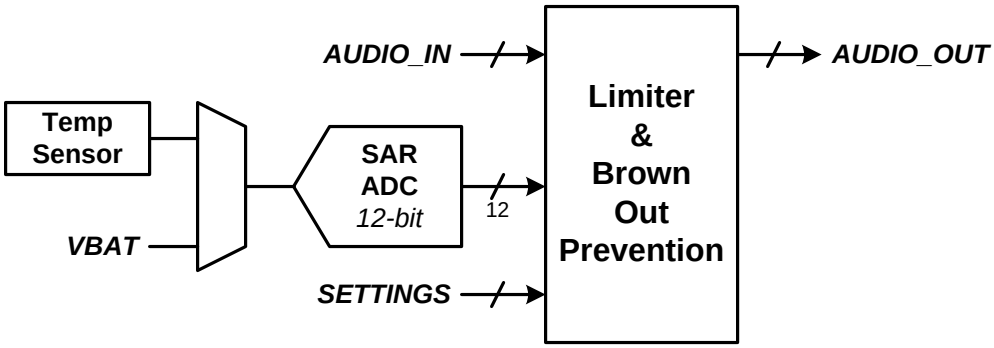

Figure 51. Limiter Block Diagram

Table 55. Brown Out Prevention Enable

BOP_EN	Value
0	Disabled
1	Enabled (default)

Copyright © 2017–2018, Texas Instruments Incorporated

Table 56. Brown Out Prevention Threshold

BOP_TH[7:0]	Threshold (V)
0x00	4.5
0x01	4.525
0x02	4.55
...	...
0x14	5.0 (default)
...	...
0xFE	10.85
0xFF	10.875

The BOP feature has a separate attack rate, attack step size and hold time from the battery tracking limiter (register bits *BOP_ATK_RT[2:0]*, *BOP_ATK_ST[1:0]* and *BOP_HLD_TM[2:0]* respectively). The BOP feature uses the *LIM_RLS_RT[2:0]* register setting to release after a brown out event.

Table 57. Brown Out Prevention Attack Rate

BOP_ATK_RT[2:0]	Attack Rate (µs)
0x0	5
0x1	10
0x2	20 (default)
0x3	40
0x4	80
0x5	160
0x6	320
0x7	640

Table 58. Brown Out Prevention Attack Step Size

BOP_ATK_ST[1:0]	Step Size (dB)
00	0.5
01	1 (default)
10	1.5
11	2

Table 59. Brown Out Prevention Hold Time

BOP_HLD_TM[2:0]	Hold Time (ms)
0x0	0
0x1	10
0x2	25
0x3	50
0x4	100
0x5	250
0x6	500 (default)
0x7	1000

The TAS2770 can also shutdown the device when a brown out event occurs if the *BOP_SHUTDOWN* register bit is set high. For the device to continue playing audio again, the device must transition through a SW/HW shutdown state. Setting the *BOP_INF_HLD* high will cause the limiter to stay in the hold state (i.e. never release) after a cleared brown out event until either the device transitions through a mute or SW/HW shutdown state or the register bit *BOP_HLD_CLR* is written to a high value (which will cause the device to exit the hold state and begin releasing). This bit is self clearing and will always readback low. Figure 52 below illustrates the entering and exiting from a brown out event.

Copyright © 2017–2018, Texas Instruments Incorporated

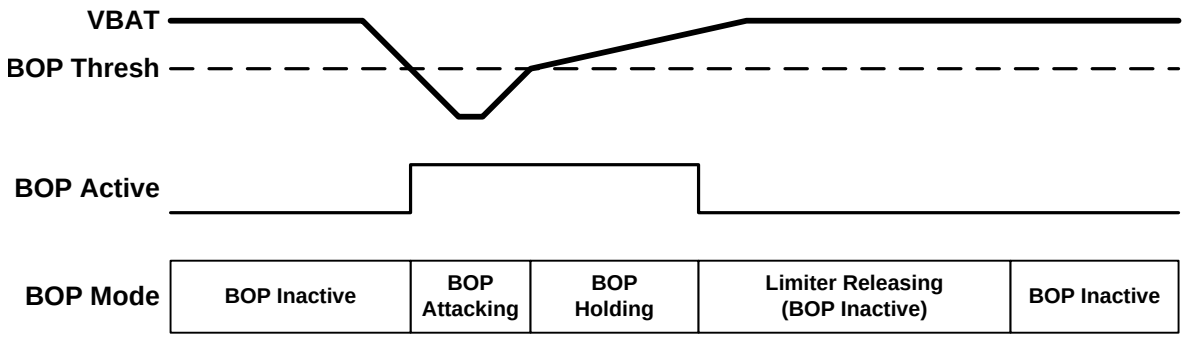

Figure 52. Brown Out Prevention Event

Table 60. Shutdown on Brown Out Event

BOP_SHUTDOWN	Value
0	Don't Shutdown (default)
1	Shutdown

Table 61. Infinite Hold on Brown Out Event

BOP_INF_HLD	Value
0	Use *BOP_HLD_TM* after Brown Out event (default)
1	Do not release until *BOP_HLD_CLR* is asserted high

Table 62. BOP Infinite Hold Clear

BOP_HLD_CLR	Value
0	Don't clear (default)
1	Clear event (self clearing)

8.4.3.5 Inter Chip Limiter Alignment

8.4.3.5.1 TDM Mode

The TAS2770 supports alignment of limiter (including brown out prevention) dynamics across devices that share the same TDM bus. This ensures consistent gain between channels during limiting or brown out events since these dynamics are dependent on audio content, which can vary across channels. Each device can be configured to align to a specified number of other devices, which allows creation of groupings of devices that align only to each other.

Limiter activity is communicated via the limiter gain reduction parameter that can be optionally transmitted by each device on SDOUT in an 8-bit time slot. Gain reduction should be transmitted in adjacent time slots for all devices that are to be aligned beginning with the first slot that is specified by the *ICLA_SLOT[5:0]* register bits. The order of the devices is not important as long as they are adjacent. The time slot for limiter gain reduction is configured by the *GAIN_SLOT[5:0]* register bits and enabled by the *GAIN_TX* register bit.

The *ICLA_SEN[7:0]* register bits specify which time slots should be listened to for gain alignment. This allows any number of devices between two and eight to be grouped together. At least two of these bits should be enabled for alignment to take place. The *ICLA_USE_MAX* register bit determines whether alignment is based on the maximum or minimum gain reduction value from the group of enabled devices.

To enable the inter chip limiter alignment feature, the *ICLA_EN* register bit should be asserted high and all devices should be configured with identical limiter and brown out prevention settings. Limiter gain reduction transmission should be enabled on all devices as described above.

Copyright © 2017–2018, Texas Instruments Incorporated

Table 63. Inter Chip Limiter Alignment

ICLA_EN	Value
0	Disabled (default)
1	Enabled

Table 64. ICLA Alignment Configuration

ICLA_MODE	Value
00	Use the minimum gain reduction of the ICLA group including 0dB (default)
01	Use the maximum gain reduction of the ICLA group
10	Use the minimum gain reduction of the ICLA group that is non-0dB
11	Reserved

Table 65. Inter Chip Limiter Alignment Starting Time Slot

ICLA_SLOT[5:0]	Starting Time Slot
0x00	Time Slot 0 (default)
0x01	Time Slot 1
0x02	Time Slot 2
...	...
0x3F	Time Slot 63

Table 66. Inter Chip Limiter Alignment Time Slot Enable

Register Bit	Description	Bit Value	State
ICLA_SEN[0]	Time Slot = *ICLA_SLOT[5:0]*. When enabled, the limiter will include this time slot in the alignment group.	0	Disabled (default)
		1	Enabled
ICLA_SEN[1]	Time Slot = *ICLA_SLOT[5:0]* + 1. When enabled, the limiter will include this time slot in the alignment group.	0	Disabled (default)
		1	Enabled
ICLA_SEN[2]	Time Slot = *ICLA_SLOT[5:0]* + 2. When enabled, the limiter will include this time slot in the alignment group.	0	Disabled (default)
		1	Enabled
ICLA_SEN[3]	Time Slot = *ICLA_SLOT[5:0]* + 3. When enabled, the limiter will include this time slot in the alignment group.	0	Disabled (default)
		1	Enabled
ICLA_SEN[4]	Time Slot = *ICLA_SLOT[5:0]* + 4. When enabled, the limiter will include this time slot in the alignment group.	0	Disabled (default)
		1	Enabled
ICLA_SEN[5]	Time Slot = *ICLA_SLOT[5:0]* + 5. When enabled, the limiter will include this time slot in the alignment group.	0	Disabled (default)
		1	Enabled
ICLA_SEN[6]	Time Slot = *ICLA_SLOT[5:0]* + 6. When enabled, the limiter will include this time slot in the alignment group.	0	Disabled (default)
		1	Enabled
ICLA_SEN[7]	Time Slot = *ICLA_SLOT[5:0]* + 7. When enabled, the limiter will include this time slot in the alignment group.	0	Disabled (default)
		1	Enabled

8.4.3.6 Class-D Settings

The TAS2770 Class-D amplifier supports spread spectrum PWM modulation, which can be enabled by setting the *AMP_SS* register bit high. This can help reduce EMI in some systems.

Table 67. Low EMI Spread Spectrum Mode

AMP_SS	Spread Spectrum
0	Disabled
1	Enabled (default)

By default the Class-D amplifier's switching frequency is based on the device's trimmed internal oscillator. To synchronize switching to the audio sample rate, set the *CLASSD_SYNC* register bit high. When the Class-D is synchronized to the audio sample rate, the *RATE_RAMP* register bit must be set based whether the audio sample rate is based on a 44.1 kHz or 48 kHz frequency. For 44.1, 88.2 and 176.4 kHz, set this bit high. for 48, 96 and 192 kHz, set this bit low. This ensures that the internal ramp generator has the appropriate slope.

Table 68. Class-D Synchronization Mode

CLASSD_SYNC	Synchronization Mode
0	Not synchronized to audio clocks (default)
1	Synchronized to audio clocks

Table 69. Sample Rate for Class-D Synchronized Mode

RAMP_RATE	Playback Sample Rate
0	48, 96 and 192 kHz (default)
1	44.1, 88.2 and 174.6 kHz

8.4.4 SAR ADC

A 12-bit SAR ADC monitors VBAT voltage and die temperature. The results of these conversions are available via register readback (*VBAT_CNV[11:0]* and *TMP_CNV[7:0]* registers respectively). VBAT voltage conversions are also used by the limiter and brown out prevention features.

The ADC runs at a fixed 667 kHz sample rate (1.5 µs per conversion) interleaved between VBAT voltage and die temperature measurements. This gives an effective sample rate of 333 kHz (3 µs per conversion) with a latency of 1 sample (1.5 µs). This gives a worst case measurement latency of 4.5 µs. Actual VBAT voltage is calculated by dividing the *VBAT_CNV[11:0]* register by 256. Actual die temperature is calculated by dividing the *TMP_CNV[11:0]* register by 16 and then subtracting 93.

Table 70. ADC VBAT Voltage Conversion

VBAT_CNV[11:0]	VBAT Voltage (V)
0x000	0 V
0x001	0.0039 V
...	...
0xC9A	12.6016 V
...	...
0xFFE	15.9922 V
0xFFF	15.9961 V

Table 71. ADC Die Temperature Conversion

TMP_CNV[11:0]	Die Temperature (°C)
0x000	-93 °C
0x001	-92.9375 °C
...	...
0x760	25 °C
...	...
0xFFE	162.8750 °C
0xFFF	162.9375 °C

Copyright © 2017–2018, Texas Instruments Incorporated

8.4.5 IV Sense

The TAS2770 provides speaker voltage and current sense for real time monitoring of loudspeaker behavior. The VSNS_P and VSNS_N pins should be connected after any ferrite bead filter (or directly to the OUT_P and OUT_N connections if no EMI filter is used). The V-Sense connections eliminate IR drop error due to packaging, PCB interconnect or ferrite bead filter resistance. It should be noted that any interconnect resistance after the V-Sense terminals will not be corrected for, so it is advised to connect the sense connections as close to the load as possible.

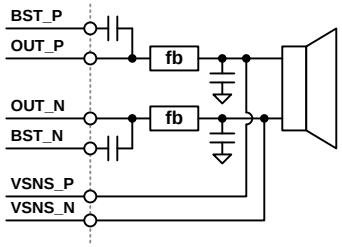

Figure 53. V-Sense Connections

I-Sense and V-Sense can be powered down by asserting the *ISNS_PD* and *VSNS_PD* register bits respectively. When powered down, the device will return null samples for the powered down block.

Table 72. I-Sense Power Down

ISNS_PD	Setting
0	I-Sense is active (default)
1	I-Sense is powered down

Table 73. V-Sense Power Down

VSNS_PD	Setting
0	V-Sense is active (default)
1	V-Sense is powered down

8.4.6 Clocks and PLL

In TMD/I^{2}C Mode, the device operates from SBCLK. Table 74 and Table 75 below shows the valid SBCLK frequencies for each sample rate and SBCLK to FSYNC ratio (for 44.1 kHz and 48 kHz family frequencies respectively.

If the sample rate is properly configured via the *SAMP_RATE[1:0]* bits, no additional configuration is required as long as the SBCLK to FSYNC ratio is valid. The device will detect improper SBCLK frequencies and SBCLK to FSYNC ratios and volume ramp down the playback path to minimize audible artifacts.

Table 74. Supported SBCLK Frequencies (48 kHz based sample rates)

Sample Rate (kHz)	SBCLK to FSYNC Ratio						
	64	96	128	192	256	384	512
48 kHz	3.072 MHz	4.608 MHz	6.144 MHz	9.216 MHz	12.288 MHz	18.432 MHz	24.576 MHz
96 kHz	6.144 MHz	9.216 MHz	12.288 MHz	18.432 MHz	24.576 MHz	-	-
192 kHz	12.288 MHz	18.432 MHz	24.576 MHz	-	-	-	-

Table 75. Supported SBCLK Frequencies (44.1 kHz based sample rates)

Sample Rate (kHz)	SBCLK to FSYNC Ratio						
	64	96	128	192	256	384	512
44.1 kHz	2.8224 MHz	4.2336 MHz	5.6448 MHz	8.4672 MHz	11.2896 MHz	16.9344 MHz	22.5792 MHz
88.2 kHz	5.6448 MHz	8.4672 MHz	11.2896 MHz	16.9344 MHz	22.5792 MHz	-	-
176.4 kHz	11.2896 MHz	16.9344 MHz	22.5792 MHz	-	-	-	-

Copyright © 2017–2018, Texas Instruments Incorporated

8.4.7 Operational Modes

8.4.7.1 Hardware Shutdown

The device enters Hardware Shutdown mode if the SDZ pin is asserted low. In Hardware Shutdown mode, the device consumes the minimum quiescent current from AVDD and VBAT supplies. All registers loose state in this mode and communication is disabled (via I^2C).

If SDZ is asserted low while audio is playing, the device will ramp down volume on the audio, stop the Class-D switching, power down analog and digital blocks and finally put the device into Hardware Shutdown mode.

When SDZ is released, the device will sample the MODE pin and enter the selected operational mode (i.e. either TDM/I^2C).

8.4.7.2 Software Shutdown

Software Shutdown mode powers down all analog blocks required to playback audio, but does not cause the device to loose register state. Software Shutdown is enabled by asserting the *MODE[1:0]* register bits to 2'b10. If audio is playing when Software Shutdown is asserted, the Class-D will volume ramp down before shutting down. When deasserted, the Class-D will begin switching and volume ramp back to the programmed digital volume setting.

8.4.7.3 Mute

The TAS2770 will volume ramp down the Class-D amplifier to a mute state by setting the *MODE[1:0]* register bits to 2'b01. During mute the Class-D still switches, but transmits no audio content. If mute is deasserted, the device will volume ramp back to the programmed digital volume setting.

8.4.7.4 Active

In Active Mode the Class-D switches and plays back audio. Speaker voltage and current sensing are operational if enabled. PDM inputis also active if enabled. Set the *MODE[1:0]* register bits to 2'b00 to enter active mode.

8.4.7.5 Mode Control and Software Reset

The TAS2770 mode can be configured by writing the *MODE[1:0]* bits.

Table 76. Mode Control

MODE[1:0]	Setting
00	Active
01	Mute
10	Software Shutdown (default)
11	Reserved

A software reset can be accomplished by asserting the *SW_RESET* bit, which is self clearing. This will restore all registers to their default values.

Table 77. Software Reset

SW_RESET	Setting
0	Don't reset (default)
1	Reset

8.4.8 Faults and Status

During the power-up sequence, the power-on-reset circuit (POR) monitoring the AVDD pin will hold the device in reset (including all configuration registers) until the supply is valid. The device will not exit hardware shutdown until AVDD is valid and the SDZ pin is released. Once SDZ is released, the digital core voltage regulator will power up, enabling detection of the operational mode. If AVDD dips below the POR threshold, the device will immediately be forced into a reset state.

Copyright © 2017–2018, Texas Instruments Incorporated

The device also monitors the VBAT supply and holds the analog core in power down if the supply is below the UVLO threshold or above the OVLO threshold. If the TAS2770 is in active operation and a UVLO or OVLO fault occurs, the analog supplies will immediately power down to protect the device. These faults are latching and require a transition through HW/SW shutdown to clear the fault. The live and latched registers will report UVLO/OVLO faults.

The device transitions into software shutdown mode if it detects any faults with the TDM clocks such as:

- Invalid SBCLK to FSYNC ratio
- Invalid FSYNC frequency
- Halting of SBCLK or FSYNC clocks

Upon detection of a TDM clock error, the device transitions into software shutdown mode as quickly as possible to limit the possibility of audio artifacts. Once all TDM clock errors are resolved, the device volume ramps back to its previous playback state. During a TDM clock error, the IRQZ pin will assert low if the clock error interrupt mask register bit is set low (*INT_MASK[2]*). The clock fault is also available for readback in the live or latched fault status registers (*INT_LIVE[2]* and *INT_LTCH[2]*). Reading the latched fault status register (*INT_LTCH[7:0]*) clears the register.

The TAS2770 also monitors die temperature and Class-D load current and will enter software shutdown mode if either of these exceed safe values. As with the TDM clock error, the IRQZ pin will assert low for these faults if the appropriate fault interrupt mask register bit is set low (*INT_MASK[0]* for over temp and *INT_MASK[1]* for over current). The fault status can also be monitored in the live and latched fault registers as with the TDM clock error.

Die over temp and Class-D over current errors can either be latching (i.e. the device will enter software shutdown until a HW/SW shutdown sequence is applied) or they can be configured to automatically retry after a prescribed time. This behavior can be configured in the *OTE_RETRY* and OCE_RETRY register bits (for over temp and over current respectively). Even in latched mode, the Class-D will not attempt to retry after an over temp or over current error until the retry time period (1.5s) has elapsed. This prevents applying repeated stress to the device in a rapid fashion that could lead to device damage. If the device has been cycled through SW/HW shutdown, the device will only begin to operate after the retry time period.

The status registers (and IRQZ pin if enabled via the status mask register) also indicates limiter behavior including when the limiter is activity, when VBAT is below the inflection point, when maximum attenuation has been applied, when the limiter is in infinite hold and when the limiter has muted the audio.

The IRQZ pin is an open drain output that asserts low during unmasked fault conditions and therefore must be pulled up with a resistor to IOVDD. An internal pull up resistor is provided in the TAS2770 and can be accessed by setting the *IRQZ_PU* register bit high. Figure 54 below highlights the IRQZ pin circuit.

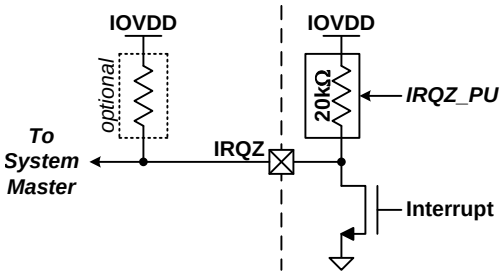

Figure 54. IRQZ Pin

Table 78. Fault Interrupt Mask

INT_MASK[10:0] Bit	Interrupt	Default (1 = Mask)
0	Over Temp Error	0
1	Over Current Error	0
2	TDM Clock Error	1
3	Limiter Active	1
4	VBAT < Inf Point	1

Copyright © 2017–2018, Texas Instruments Incorporated

Table 78. Fault Interrupt Mask (continued)

INT_MASK[10:0] Bit	Interrupt	Default (1 = Mask)
5	Limiter Max Atten	1
6	Limiter Inf Hold	1
7	Limiter Mute	1
8	PDM Clock Error	1
9	VBAT Brown Out	1
10	VBAT UVLO	1
11	VBAT OVLO	1

Table 79. IRQZ Internal Pull Up Enable

IRQZ_PU	State
0	Disabled (default)
1	Enabled

Table 80. IRQZ Interrupt Configuration

IRQZ_PIN_CFG[1:0]	Value
00	IRQZ will assert on any unmasked live interrupts
01	IRQZ will assert on any unmasked latched interrupts (default)
10	Reserved
11	Reserved

8.4.9 Power Sequencing Requirements

AVDD and IOVDD pins should be connected to the same 1.8 V supply domain. There are no other power sequencing requirements for order of rate of ramping up or down.

8.4.10 Digital Input Pull Downs

Each digital input and IO has an optional weak pull down to prevent the pin from floating. Pull downs are not enabled during HW shutdown.

Table 81. Digital Input Pull Down Enables

Register Bit	Description	Bit Value	State
DIN_PD[0]	Weak pull down for PDMCK.	0	Disabled
		1	Enabled (default)
DIN_PD[2]	Weak pull down for PDMD.	0	Disabled
		1	Enabled (default)
DIN_PD[5]	Weak pull down for FSYNC.	0	Disabled
		1	Enabled (default)
DIN_PD[6]	Weak pull down for SDIN.	0	Disabled
		1	Enabled (default)
DIN_PD[7]	Weak pull down for SDOUT.	0	Disabled
		1	Enabled (default)

8.5 Register Maps

8.5.1 Register Summary Table Book=0x00 Page=0x00

Addr	Register	Description	Section
0x00	PAGE	Device Page	PAGE (book=0x00 page=0x00 address=0x00) [reset=0h]

Copyright © 2017–2018, Texas Instruments Incorporated

Register Maps (continued)

0x01	SW_RESET	Software Reset	SW_RESET (book=0x00 page=0x00 address=0x01) [reset=0h]
0x02	PWR_CTL	Power Control	PWR_CTL (book=0x00 page=0x00 address=0x02) [reset=Eh]
0x03	PB_CFG0	Playback Configuration 0	PB_CFG0 (book=0x00 page=0x00 address=0x03) [reset=10h]
0x04	PB_CFG1	Playback Configuration 1	PB_CFG1 (book=0x00 page=0x00 address=0x04) [reset=1h]
0x05	PB_CFG2	Playback Configuration 2	PB_CFG2 (book=0x00 page=0x00 address=0x05) [reset=0h]
0x06	PB_CFG3	Playback Configuration 3	PB_CFG3 (book=0x00 page=0x00 address=0x06) [reset=0h]
0x07	MISC_CFG	Misc Configuration	MISC_CFG (book=0x00 page=0x00 address=0x07) [reset=6h]
0x08	PDM_CFG0	PDM Input Register 0	PDM_CFG0 (book=0x00 page=0x00 address=0x08) [reset=0h]
0x09	PDM_CFG1	PDM Configuration 1	PDM_CFG1 (book=0x00 page=0x00 address=0x09) [reset=8h]
0x0A	TDM_CFG0	TDM Configuration 0	TDM_CFG0 (book=0x00 page=0x00 address=0x0A) [reset=7h]
0x0B	TDM_CFG1	TDM Configuration 1	TDM_CFG1 (book=0x00 page=0x00 address=0x0B) [reset=2h]
0x0C	TDM_CFG2	TDM Configuration 2	TDM_CFG2 (book=0x00 page=0x00 address=0x0C) [reset=Ah]
0x0D	TDM_CFG3	TDM Configuration 3	TDM_CFG3 (book=0x00 page=0x00 address=0x0D) [reset=10h]
0x0E	TDM_CFG4	TDM Configuration 4	TDM_CFG4 (book=0x00 page=0x00 address=0x0E) [reset=13h]
0x0F	TDM_CFG5	TDM Configuration 5	TDM_CFG5 (book=0x00 page=0x00 address=0x0F) [reset=2h]
0x10	TDM_CFG6	TDM Configuration 6	TDM_CFG6 (book=0x00 page=0x00 address=0x10) [reset=0h]
0x11	TDM_CFG7	TDM Configuration 7	TDM_CFG7 (book=0x00 page=0x00 address=0x11) [reset=4h]
0x12	TDM_CFG8	TDM Configuration 8	TDM_CFG8 (book=0x00 page=0x00 address=0x12) [reset=6h]
0x13	TDM_CFG9	TDM Configuration 9	TDM_CFG9 (book=0x00 page=0x00 address=0x13) [reset=7h]
0x14	TDM_CFG10	TDM Configuration 10	TDM_CFG10 (book=0x00 page=0x00 address=0x14) [reset=8h]
0x15	LIM_CFG0	Limiter Configuration 0	LIM_CFG0 (book=0x00 page=0x00 address=0x15) [reset=14h]
0x16	LIM_CFG1	Limiter Configuration 1	LIM_CFG1 (book=0x00 page=0x00 address=0x16) [reset=76h]
0x17	LIM_CFG2	Limiter Configuration 2	LIM_CFG2 (book=0x00 page=0x00 address=0x17) [reset=10h]
0x18	LIM_CFG3	Limiter Configuration 3	LIM_CFG3 (book=0x00 page=0x00 address=0x18) [reset=6Eh]
0x19	LIM_CFG4	Limiter Configuration 4	LIM_CFG4 (book=0x00 page=0x00 address=0x19) [reset=1Eh]
0x1A	LIM_CFG5	Limiter Configuration 5	LIM_CFG5 (book=0x00 page=0x00 address=0x1A) [reset=58h]
0x1B	BOP_CFG0	Brown Out Prevention 0	BOP_CFG0 (book=0x00 page=0x00 address=0x1B) [reset=1h]
0x1C	BOP_CFG1	Brown Out Prevention 1	BOP_CFG1 (book=0x00 page=0x00 address=0x1C) [reset=14h]
0x1D	BOP_CFG2	Brown Out Prevention 2	BOP_CFG2 (book=0x00 page=0x00 address=0x1D) [reset=4Eh]
0x1E	ICLA_CFG0	Inter Chip Limiter Alignment 0	ICLA_CFG0 (book=0x00 page=0x00 address=0x1E) [reset=0h]
0x1F	ICLA_CFG1	Inter Chip Limiter Alignment 1	ICLA_CFG1 (book=0x00 page=0x00 address=0x1F) [reset=0h]
0x20	INT_MASK0	Interrupt Mask 0	INT_MASK0 (book=0x00 page=0x00 address=0x20) [reset=FCh]
0x21	INT_MASK1	Interrupt Mask 1	INT_MASK1 (book=0x00 page=0x00 address=0x21) [reset=B1h]
0x22	INT_LIVE0	Live Interrupt Readback 0	INT_LIVE0 (book=0x00 page=0x00 address=0x22) [reset=0h]
0x23	INT_LIVE1	Live Interrupt Readback 1	INT_LIVE1 (book=0x00 page=0x00 address=0x23) [reset=0h]
0x24	INT_LTCH0	Latched Interrupt Readback 0	INT_LTCH0 (book=0x00 page=0x00 address=0x24) [reset=0h]
0x25	INT_LTCH1	Latched Interrupt Readback 1	INT_LTCH1 (book=0x00 page=0x00 address=0x25) [reset=0h]

Copyright © 2017–2018, Texas Instruments Incorporated

Register Maps (continued)

0x27	VBAT_MSB	SAR ADC Conversion 0	VBAT_MSB (book=0x00 page=0x00 address=0x27) [reset=0h]
0x28	VBAT_LSB	SAR ADC Conversion 1	VBAT_LSB (book=0x00 page=0x00 address=0x28) [reset=0h]
0x29	TEMP_MSB	SAR ADC Conversion 2	TEMP_MSB (book=0x00 page=0x00 address=0x29) [reset=0h]
0x2A	TEMP_LSB	SAR ADC Conversion 2	TEMP_LSB (book=0x00 page=0x00 address=0x2A) [reset=0h]
0x30	INT_CFG	Interrupt Configuration	INT_CFG (book=0x00 page=0x00 address=0x30) [reset=5h]
0x31	DIN_PD	Digital Input Pin Pull Down	DIN_PD (book=0x00 page=0x00 address=0x31) [reset=0h]
0x32	MISC_IRQ	Misc Configuration	MISC_IRQ (book=0x00 page=0x00 address=0x32) [reset=81h]
0x3C	CLOCK_CFG	Clock Configuration	CLOCK_CFG (book=0x00 page=0x00 address=0x3C) [reset=Dh]
0x77	TDM_DET	TDM Clock detection monitor	TDM_DET (book=0x00 page=0x00 address=0x77) [reset=7Fh]
0x7D	REV_ID	Revision and PG ID	REV_ID (book=0x00 page=0x00 address=0x7D) [reset=20h]
0x7E	I2C_CKSUM	I2C Checksum	I2C_CKSUM (book=0x00 page=0x00 address=0x7E) [reset=0h]
0x7F	BOOK	Device Book	BOOK (book=0x00 page=0x00 address=0x7F) [reset=0h]

8.5.2 Register Maps

8.5.2.1 PAGE (book=0x00 page=0x00 address=0x00) [reset=0h]

The device's memory map is divided into pages and books. This register sets the page.

Figure 55. PAGE Register Address: 0x00

7	6	5	4	3	2	1	0
PAGE[7:0]							
RW-0h							

LEGEND: R/W = Read/Write; R = Read only; -n = value after reset

Table 82. Device Page Field Descriptions

Bit	Field	Type	Reset	Description
7-0	PAGE[7:0]	RW	0h	Sets the device page. 00h = Page 0 01h = Page 1 ... FFh = Page 255

8.5.2.2 SW_RESET (book=0x00 page=0x00 address=0x01) [reset=0h]

Asserting Software Reset will place all register values in their default POR (Power on Reset) state.

Figure 56. SW_RESET Register Address: 0x01

7	6	5	4	3	2	1	0
Reserved							SW_RESET
RW-0h							RW-0h

LEGEND: R/W = Read/Write; R = Read only; -n = value after reset

Table 83. Software Reset Field Descriptions

Bit	Field	Type	Reset	Description
7-1	Reserved	RW	0h	Reserved
0	SW_RESET	RW	0h	Software reset. Bit is self clearing. 0b = Don't reset 1b = Reset

Copyright © 2017–2018, Texas Instruments Incorporated

8.5.2.3 PWR_CTL (book=0x00 page=0x00 address=0x02) [reset=Eh]

Sets device's mode of operation and power down of IV sense blocks.

Figure 57. PWR_CTL Register Address: 0x02

7	6	5	4	3	2	1	0
Reserved		Reserved	Reserved	ISNS_PD	VSNS_PD	MODE[1:0]	
RW-0h		RW-0h	RW-0h	RW-1h	RW-1h	RW-2h	

LEGEND: R/W = Read/Write; R = Read only; -n = value after reset

Table 84. Power Control Field Descriptions

Bit	Field	Type	Reset	Description
7-6	Reserved	RW	0h	Reserved
5	Reserved	RW	0h	Reserved
4	Reserved	RW	0h	Reserved
3	ISNS_PD	RW	1h	Current sense power down. 0b = Current sense active 1b = Current sense is powered down
2	VSNS_PD	RW	1h	Voltage sense power down. 0b = voltage sense is active 1b = Voltage sense is powered down
1-0	MODE[1:0]	RW	2h	Device operational mode. 00b = Active 01b = Mute 10b = Software Shutdown 11b = Reserved

8.5.2.4 PB_CFG0 (book=0x00 page=0x00 address=0x03) [reset=10h]

Sets playback source, including PDM input and amplifier output level setting.

Figure 58. PB_CFG0 Register Address: 0x03

7	6	5	4	3	2	1	0
PDM_MAP	PB_PDM_SRC	PB_SRC	AMP_LEVEL[4:0]				
RW-0h	RW-0h	RW-0h	RW-10h				

LEGEND: R/W = Read/Write; R = Read only; -n = value after reset

Table 85. Playback Configuration 0 Field Descriptions

Bit	Field	Type	Reset	Description
7	PDM_MAP	RW	0h	PDM Pin Mapping 0b = PDMD1 for sensor input. 1b = PDMD1 for playback.
6	PB_PDM_SRC	RW	0h	PDM playback source. 0b = PDM input pin defined by PDM_MAP. 1b = Reserved.
5	PB_SRC	RW	0h	Playback source. 0b = PCM 1b = PDM

Copyright © 2017–2018, Texas Instruments Incorporated

Table 85. Playback Configuration 0 Field Descriptions (continued)

Bit	Field	Type	Reset	Description
4-0	AMP_LEVEL[4:0]	RW	10h	Amplifier output level setting. 00h = 11.0 dBV (5.02 Vpk) 01h = 11.5 dBV (5.32 Vpk) 02h = 12.0 dBV (5.63 Vpk) 03h = 12.5 dBV (5.96 Vpk) 04h = 13.0 dBV (6.32 Vpk) 05h = 13.5 dBV (6.69 Vpk) 06h = 14.0 dBV (7.09 Vpk) 07h = 14.5 dBV (7.51 Vpk) 08h = 15.0 dBV (7.95 Vpk) 09h = 15.5 dBV (8.42 Vpk) 0Ah = 16.0 dBV (8.92 Vpk) 0Bh = 16.5 dBV (9.45 Vpk) 0Ch = 17.0 dBV (10.01 Vpk) 0Dh = 17.5 dBV (10.61 Vpk) 0Eh = 18.0 dBV (11.23 Vpk) 0Fh = 18.5 dBV (11.90 Vpk) 10h = 19.0 dBV (12.60 Vpk) 11h = 19.5 dBV (13.35 Vpk) 12h = 20.0 dBV (14.14 Vpk) 13h = 20.5 dBV (14.98 Vpk) 14h = 21.0 dBV (15.87 Vpk) 15h - 1Fh = Reserved

8.5.2.5 PB_CFG1 (book=0x00 page=0x00 address=0x04) [reset=1h]

Sets playback high pass filter corner (PCM playback only).

Figure 59. PB_CFG1 Register Address: 0x04

7	6	5	4	3	2	1	0
Reserved	Reserved	Reserved	Reserved	Reserved	HPF_FREQ[2:0]		
RW-0h	RW-0h	RW-0h	RW-0h	RW-0h	RW-1h		

LEGEND: R/W = Read/Write; R = Read only; -n = value after reset

Table 86. Playback Configuration 1 Field Descriptions

Bit	Field	Type	Reset	Description
7	Reserved	RW	0h	Reserved
6	Reserved	RW	0h	Reserved
5	Reserved	RW	0h	Reserved
4	Reserved	RW	0h	Reserved
3	Reserved	RW	0h	Reserved
2-0	HPF_FREQ[2:0]	RW	1h	High Pass Filter Corner Frequency. 000b = Bypass 001b = 2 Hz 010b = 50 Hz 011b = 100 Hz 100b = 200 Hz 101b = 400 Hz 110b = 800 Hz 111b = Reserved

8.5.2.6 PB_CFG2 (book=0x00 page=0x00 address=0x05) [reset=0h]

Sets playback volume for PCM playback path.

Copyright © 2017–2018, Texas Instruments Incorporated

Figure 60. PB_CFG2 Register Address: 0x05

7	6	5	4	3	2	1	0
DVC_PCM[7:0]							
RW-0h							

LEGEND: R/W = Read/Write; R = Read only; -n = value after reset

Table 87. Playback Configuration 2 Field Descriptions

Bit	Field	Type	Reset	Description
7-0	DVC_PCM[7:0]	RW	0h	PCM digital volume control. 00h = 0 dB 01h = -0.5 dB 02h = -1 dB .... C7h = -99.5 dB C8h = -100dB C9h - FFh = Mute

8.5.2.7 PB_CFG3 (book=0x00 page=0x00 address=0x06) [reset=0h]

Sets playback volume for PDM playback path.

Figure 61. PB_CFG3 Register Address: 0x06

7	6	5	4	3	2	1	0
DVC_PDM[7:0]							
RW-0h							

LEGEND: R/W = Read/Write; R = Read only; -n = value after reset

Table 88. Playback Configuration 3 Field Descriptions

Bit	Field	Type	Reset	Description
7-0	DVC_PDM[7:0]	RW	0h	PDM digital volume control. 00h = 0 dB 01h = -0.5 dB 02h = -1 dB .... C7h = -99.5 dB C8h = -100dB C9h - FFh = Mute

8.5.2.8 MISC_CFG (book=0x00 page=0x00 address=0x07) [reset=6h]

Sets DVC Ramp Rate, IRQZ pull up, amp spread spectrum and I-Sense current range.

Figure 62. MISC_CFG Register Address: 0x07

7	6	5	4	3	2	1	0
DVC_RAMP_RATE[1:0]		Reserved		IRQZ_PU	AMP_SS	Reserved	
RW-0h		RW-0h		RW-0h	RW-1h	RW-2h	

LEGEND: R/W = Read/Write; R = Read only; -n = value after reset

Table 89. Misc Configuration Field Descriptions

Bit	Field	Type	Reset	Description
7-6	DVC_RAMP_RATE[1:0]	RW	0h	Digital volume control ramp rate. 00b = 0.5 dB per 1 sample 01b = 0.5 dB per 4 samples 10b = 0.5 dB per 8 samples 11b = Volume ramping disabled
5-4	Reserved	RW	0h	Reserved

Copyright © 2017–2018, Texas Instruments Incorporated

Table 89. Misc Configuration Field Descriptions (continued)

Bit	Field	Type	Reset	Description
3	IRQZ_PU	RW	0h	IRQZ internal pull up enable. 0b = Disabled 1b = Enabled
2	AMP_SS	RW	1h	Low EMI spread spectrum enable. 0b = Disabled 1b = Enabled
1-0	Reserved	RW	2h	Reserved

8.5.2.9 PDM_CFG0 (book=0x00 page=0x00 address=0x08) [reset=0h]

Sets Class-D sync mode and PDM sample rates.

Figure 63. PDM_CFG0 Register Address: 0x08

7	6	5	4	3	2	1	0
Reserved	CLASSD_SYNC	Reserved		PDM_RATE1[1:0]		Reserved	
RW-0h	RW-0h	RW-0h		RW-0h		RW-0h	

LEGEND: R/W = Read/Write; R = Read only; -n = value after reset

Table 90. PDM Input Register 0 Field Descriptions

Bit	Field	Type	Reset	Description
7	Reserved	RW	0h	Reserved
6	CLASSD_SYNC	RW	0h	Class-D synchronization mode. 0b = Not synchronized to audio clocks 1b = Synchronized to audio clocks
5-4	Reserved	RW	0h	Reserved
3-2	PDM_RATE1[1:0]	RW	0h	PDMD1 input sample rate. 00b = 2.54 - 3.38 MHz 01b = 5.08 - 6.76 MHz 10b = Reserved 11b = Reserved
1-0	Reserved	RW	0h	Reserved

8.5.2.10 PDM_CFG1 (book=0x00 page=0x00 address=0x09) [reset=8h]

Sets PDM capture edge, master/slave, clock source and gating.

Figure 64. PDM_CFG1 Register Address: 0x09

7	6	5	4	3	2	1	0
PDM_EDGE1	Reserved	PDM_SLV1	Reserved	PDM_CLK1	Reserved	PDM_GATE1	Reserved
RW-0h	RW-0h	RW-0h	RW-0h	RW-1h	RW-0h	RW-0h	RW-0h

LEGEND: R/W = Read/Write; R = Read only; -n = value after reset

Table 91. PDM Configuration 1 Field Descriptions

Bit	Field	Type	Reset	Description
7	PDM_EDGE1	RW	0h	PDMD1 input capture edge. 0b = Rising 1b = Falling
6	Reserved	RW	0h	Reserved
5	PDM_SLV1	RW	0h	PDMD1 input master or slave. 0b = Slave 1b = Master
4	Reserved	RW	0h	Reserved

Copyright © 2017–2018, Texas Instruments Incorporated

Table 91. PDM Configuration 1 Field Descriptions (continued)

Bit	Field	Type	Reset	Description
3	PDM_CLK1	RW	1h	PDMD1 clock select. 0b = GND 1b = PDMCK1
2	Reserved	RW	0h	Reserved
1	PDM_GATE1	RW	0h	PDMD1 clock gate. 0b = Gated Off 1b = Active
0	Reserved	RW	0h	Reserved

8.5.2.11 TDM_CFG0 (book=0x00 page=0x00 address=0x0A) [reset=7h]

Sets the TDM frame start, TDM sample rate, TDM auto rate detection and whether rate is based on 44.1 kHz or 48 kHz frequency.

Figure 65. TDM_CFG0 Register Address: 0x0A

7	6	5	4	3	2	1	0
Reserved		RATE_RAMP	AUTO_RATE	SAMP_RATE[2:0]			FRAME_START
RW-0h		RW-0h	RW-0h	RW-3h			RW-1h

LEGEND: R/W = Read/Write; R = Read only; -n = value after reset

Table 92. TDM Configuration 0 Field Descriptions

Bit	Field	Type	Reset	Description
7-6	Reserved	RW	0h	Reserved
5	RATE_RAMP	RW	0h	Sample rate based on 44.1kHz or 48kHz when CLASSD_SYNC=1. 0b = 48kHz 1b = 44.1kHz
4	AUTO_RATE	RW	0h	Auto detection of TDM sample rate. 0b = Enabled 1b = Disabled
3-1	SAMP_RATE[2:0]	RW	3h	Sample rate of the TDM bus. 000b = Reserved 001b = Reserved 010b = Reserved 011b = 44.1/48 kHz 100b = 88.2/96 kHz 101b = 176.4/192 kHz 110b = Reserved 111b = Reserved
0	FRAME_START	RW	1h	TDM frame start polarity. 0b = Low to High on FSYNC 1b = High to Low on FSYNC

8.5.2.12 TDM_CFG1 (book=0x00 page=0x00 address=0x0B) [reset=2h]

Sets TDM RX justification, offset and capture edge.

Figure 66. TDM_CFG1 Register Address: 0x0B

7	6	5	4	3	2	1	0
Reserved	RX_JUSTIFY	RX_OFFSET[4:0]					RX_EDGE
RW-0h	RW-0h	RW-1h					RW-0h

LEGEND: R/W = Read/Write; R = Read only; -n = value after reset

Copyright © 2017–2018, Texas Instruments Incorporated

Table 93. TDM Configuration 1 Field Descriptions

Bit	Field	Type	Reset	Description
7	Reserved	RW	0h	Reserved
6	RX_JUSTIFY	RW	0h	TDM RX sample justification within the time slot. 0b = Left 1b = Right
5-1	RX_OFFSET[4:0]	RW	1h	TDM RX start of frame to time slot 0 offset (SBCLK cycles).
0	RX_EDGE	RW	0h	TDM RX capture clock polarity. 0b = Rising edge of SBCLK 1b = Falling edge of SBCLK

8.5.2.13 TDM_CFG2 (book=0x00 page=0x00 address=0x0C) [reset=Ah]

Sets TDM RX time slot select, word length and time slot length.

Figure 67. TDM_CFG2 Register Address: 0x0C

7	6	5	4	3	2	1	0
Reserved		RX_SCFG[1:0]		RX_WLEN[1:0]		RX_SLEN[1:0]	
RW-0h		RW-0h		RW-2h		RW-2h	

LEGEND: R/W = Read/Write; R = Read only; -n = value after reset

Table 94. TDM Configuration 2 Field Descriptions

Bit	Field	Type	Reset	Description
7-6	Reserved	RW	0h	Reserved
5-4	RX_SCFG[1:0]	RW	0h	TDM RX time slot select config. 00b = Mono with time slot equal to I2C address offset 01b = Mono left channel 10b = Mono right channel 11b = Stereo downmix (L+R)/2
3-2	RX_WLEN[1:0]	RW	2h	TDM RX word length. 00b = 16-bits 01b = 20-bits 10b = 24-bits 11b = 32-bits
1-0	RX_SLEN[1:0]	RW	2h	TDM RX time slot length. 00b = 16-bits 01b = 24-bits 10b = 32-bits 11b = Reserved

8.5.2.14 TDM_CFG3 (book=0x00 page=0x00 address=0x0D) [reset=10h]

Sets TDM RX left and right time slots.

Figure 68. TDM_CFG3 Register Address: 0x0D

7	6	5	4	3	2	1	0
RX_SLOT_R[3:0]				RX_SLOT_L[3:0]			
RW-1h				RW-0h			

LEGEND: R/W = Read/Write; R = Read only; -n = value after reset

Table 95. TDM Configuration 3 Field Descriptions

Bit	Field	Type	Reset	Description
7-4	RX_SLOT_R[3:0]	RW	1h	TDM RX Right Channel Time Slot.
3-0	RX_SLOT_L[3:0]	RW	0h	TDM RX Left Channel Time Slot.

Copyright © 2017–2018, Texas Instruments Incorporated

8.5.2.15 TDM_CFG4 (book=0x00 page=0x00 address=0x0E) [reset=13h]

Sets TDM TX bus keeper, fill, offset and transmit edge.

Figure 69. TDM_CFG4 Register Address: 0x0E

7	6	5	4	3	2	1	0
TX_LSB_CFG	TX_KEEPER_CFG	TX_KEEPER	TX_FILL	TX_OFFSET[2:0]			TX_EDGE
RW-0h	RW-0h	RW-0h	RW-1h	RW-1h			RW-1h

LEGEND: R/W = Read/Write; R = Read only; -n = value after reset

Table 96. TDM Configuration 4 Field Descriptions

Bit	Field	Type	Reset	Description
7	TX_LSB_CFG	RW	0h	TDM TX SDOUT LSB data option 0b = TX SDOUT LSB is driven for full-cycle (provided TX_KEEPER is '0') 1b = TX SDOUT LSB is driven for half-cycle
6	TX_KEEPER_CFG	RW	0h	TDM TX SDOUT bus keeper configuration. 0b = Bus keeper is enabled only for 1 LSB bit cycle & SDOUT LSB driven for half cycle (provided TX_KEEPER is '1') 1b = Bus keeper is always enabled & SDOUT LSB driven for half cycle (provided TX_KEEPER is '1')
5	TX_KEEPER	RW	0h	TDM TX SDOUT bus keeper enable. 0b = Disable bus keeper 1b = Enable bus keeper
4	TX_FILL	RW	1h	TDM TX SDOUT unused bitfield fill. 0b = Transmit 0 1b = Transmit Hi-Z
3-1	TX_OFFSET[2:0]	RW	1h	TDM TX start of frame to time slot 0 offset.
0	TX_EDGE	RW	1h	TDM TX launch clock polarity. 0b = Rising edge of SBCLK 1b = Falling edge of SBCLK

8.5.2.16 TDM_CFG5 (book=0x00 page=0x00 address=0x0F) [reset=2h]

Sets TDM TX V-Sense time slot and enable.

Figure 70. TDM_CFG5 Register Address: 0x0F

7	6	5	4	3	2	1	0
Reserved	VSNS_TX	VSNS_SLOT[5:0]					
RW-0h	RW-0h	RW-2h					

LEGEND: R/W = Read/Write; R = Read only; -n = value after reset

Table 97. TDM Configuration 5 Field Descriptions

Bit	Field	Type	Reset	Description
7	Reserved	RW	0h	Reserved
6	VSNS_TX	RW	0h	TDM TX voltage sense transmit enable. 0b = Disabled 1b = Enabled
5-0	VSNS_SLOT[5:0]	RW	2h	TDM TX voltage sense time slot. It is recommended to maintain the following order: ISNS_SLOT<VSNS_SLOT<PDM_SLOT<VBAT_SLOT<TEMP_SLOT<GAIN_SLOT

8.5.2.17 TDM_CFG6 (book=0x00 page=0x00 address=0x10) [reset=0h]

Sets TDM TX I-Sense time slot and enable.

Copyright © 2017–2018, Texas Instruments Incorporated

Figure 71. TDM_CFG6 Register Address: 0x10

7	6	5	4	3	2	1	0
Reserved	ISNS_TX	ISNS_SLOT[5:0]					
RW-0h	RW-0h	RW-0h					

LEGEND: R/W = Read/Write; R = Read only; -n = value after reset

Table 98. TDM Configuration 6 Field Descriptions

Bit	Field	Type	Reset	Description
7	Reserved	RW	0h	Reserved
6	ISNS_TX	RW	0h	TDM TX current sense transmit enable. 0b = Disabled 1b = Enabled
5-0	ISNS_SLOT[5:0]	RW	0h	TDM TX current sense time slot. It is recommended to maintain the following order: ISNS_SLOT<VSNS_SLOT<PDM_SLOT<VBAT_SLOT<TEMP_SLOT<GAIN_SLOT

8.5.2.18 TDM_CFG7 (book=0x00 page=0x00 address=0x11) [reset=4h]

Sets TDM TX time slot and transmit enable for decimated PDM.

Figure 72. TDM_CFG7 Register Address: 0x11

7	6	5	4	3	2	1	0
Reserved	PDM_TX	PDM_SLOT[5:0]					
RW-0h	RW-0h	RW-4h					

LEGEND: R/W = Read/Write; R = Read only; -n = value after reset

Table 99. TDM Configuration 7 Field Descriptions

Bit	Field	Type	Reset	Description
7	Reserved	RW	0h	Reserved
6	PDM_TX	RW	0h	TDM TX decimated PDM transmit enable. 0b = Disabled 1b = Enabled
5-0	PDM_SLOT[5:0]	RW	4h	TDM TX decimated PDM time slot.

8.5.2.19 TDM_CFG8 (book=0x00 page=0x00 address=0x12) [reset=6h]

Sets TDM TX VBAT time slot and enable.

Figure 73. TDM_CFG8 Register Address: 0x12

7	6	5	4	3	2	1	0
VBAT_SLEN	VBAT_TX	VBAT_SLOT[5:0]					
RW-0h	RW-0h	RW-6h					

LEGEND: R/W = Read/Write; R = Read only; -n = value after reset

Table 100. TDM Configuration 8 Field Descriptions

Bit	Field	Type	Reset	Description
7	VBAT_SLEN	RW	0h	TDM TX VBAT time slot length. 0b = Truncate to 8-bits 1b = Left justify to 16-bits
6	VBAT_TX	RW	0h	TDM TX VBAT transmit enable. 0b = Disabled 1b = Enabled
5-0	VBAT_SLOT[5:0]	RW	6h	TDM TX VBAT time slot.

Copyright © 2017–2018, Texas Instruments Incorporated

8.5.2.20 TDM_CFG9 (book=0x00 page=0x00 address=0x13) [reset=7h]

Sets TDM TX temp time slot and enable.

Figure 74. TDM_CFG9 Register Address: 0x13

7	6	5	4	3	2	1	0
Reserved	TEMP_TX	TEMP_SLOT[5:0]					
RW-0h	RW-0h	RW-7h					

LEGEND: R/W = Read/Write; R = Read only; -n = value after reset

Table 101. TDM Configuration 9 Field Descriptions

Bit	Field	Type	Reset	Description
7	Reserved	RW	0h	Reserved
6	TEMP_TX	RW	0h	TDM TX temp sensor transmit enable. 0b = Disabled 1b = Enabled
5-0	TEMP_SLOT[5:0]	RW	7h	TDM TX temp sensor time slot.

8.5.2.21 TDM_CFG10 (book=0x00 page=0x00 address=0x14) [reset=8h]

Sets TDM TX limiter gain reduction time slot and enable.

Figure 75. TDM_CFG10 Register Address: 0x14

7	6	5	4	3	2	1	0
Reserved	GAIN_TX	GAIN_SLOT[5:0]					
RW-0h	RW-0h	RW-8h					

LEGEND: R/W = Read/Write; R = Read only; -n = value after reset

Table 102. TDM Configuration 10 Field Descriptions

Bit	Field	Type	Reset	Description
7	Reserved	RW	0h	Reserved
6	GAIN_TX	RW	0h	TDM TX limiter gain reduction transmit enable. 0b = Disabled 1b = Enabled
5-0	GAIN_SLOT[5:0]	RW	8h	TDM TX limiter gain reduction time slot.

8.5.2.22 LIM_CFG0 (book=0x00 page=0x00 address=0x15) [reset=14h]

Sets Limiter attack step size, attack rate and enable.

Figure 76. LIM_CFG0 Register Address: 0x15

7	6	5	4	3	2	1	0
Reserved		LIM_ATK_ST[1:0]		LIM_ATK_RT[2:0]			LIM_EN
RW-0h		RW-1h		RW-2h			RW-0h

LEGEND: R/W = Read/Write; R = Read only; -n = value after reset

Table 103. Limiter Configuration 0 Field Descriptions

Bit	Field	Type	Reset	Description
7-6	Reserved	RW	0h	Reserved
5-4	LIM_ATK_ST[1:0]	RW	1h	Limiter/ICLA attack step size. 00b = 0.25 dB 01b = 0.5 dB 10b = 1 dB 11b = 2 dB

Copyright © 2017–2018, Texas Instruments Incorporated

Table 103. Limiter Configuration 0 Field Descriptions (continued)

Bit	Field	Type	Reset	Description
3-1	LIM_ATK_RT[2:0]	RW	2h	Limiter/ICLA attack rate. 000b = 5 us/step 001b = 10 us/step 010b = 20 us/step 011b = 40 us/step 100b = 80 us/step 101b = 160 us/step 110b = 320 us/step 111b = 640 us/step
0	LIM_EN	RW	0h	Limiter enable. 0b = Disabled 1b = Enabled

8.5.2.23 LIM_CFG1 (book=0x00 page=0x00 address=0x16) [reset=76h]

Sets limiter release step size, release rate and hold time.

Figure 77. LIM_CFG1 Register Address: 0x16

7	6	5	4	3	2	1	0
LIM_RLS_ST[1:0]		LIM_RLS_RT[2:0]			LIM_HLD_TM[2:0]		
RW-1h		RW-6h			RW-6h		

LEGEND: R/W = Read/Write; R = Read only; -n = value after reset

Table 104. Limiter Configuration 1 Field Descriptions

Bit	Field	Type	Reset	Description
7-6	LIM_RLS_ST[1:0]	RW	1h	Limiter/BOP/ICLA release step size. 00b = 0.25 dB 01b = 0.5 dB 10b = 1 dB 11b = 2 dB
5-3	LIM_RLS_RT[2:0]	RW	6h	Limiter/BOP/ICLA release rate. 000b = 10 ms/step 001b = 50 ms/step 010b = 100 ms/step 011b = 250 ms/step 100b = 500 ms/step 101b = 750 ms/step 110b = 1000 ms/step 111b = 1500 ms/step
2-0	LIM_HLD_TM[2:0]	RW	6h	Limiter hold time. 000b = 0 ms 001b = 10 ms 010b = 25 ms 011b = 50 ms 100b = 100 ms 101b = 250 ms 110b = 500 ms 111b = 1000 ms

8.5.2.24 LIM_CFG2 (book=0x00 page=0x00 address=0x17) [reset=10h]

Sets limiter VBAT tracking slope and max attenuatio.

Figure 78. LIM_CFG2 Register Address: 0x17

7	6	5	4	3	2	1	0
Reserved			LIM_MAX_ATN[4:0]				
RW-0h			RW-10h				

LEGEND: R/W = Read/Write; R = Read only; -n = value after reset

Copyright © 2017–2018, Texas Instruments Incorporated

Table 105. Limiter Configuration 2 Field Descriptions

Bit	Field	Type	Reset	Description
7-5	Reserved	RW	0h	Reserved
4-0	LIM_MAX_ATN[4:0]	RW	10h	Limiter max attenuation. 00h = 1 dB 01h = 1.5 dB ... 10h = 9 dB ... 1Eh = 16 dB 1Fh = 16.5 dB

8.5.2.25 LIM_CFG3 (book=0x00 page=0x00 address=0x18) [reset=6Eh]

Sets Limiter max threshold.

Figure 79. LIM_CFG3 Register Address: 0x18

7	6	5	4	3	2	1	0
Reserved	LIM_TH_MAX[6:0]						
RW-0h	RW-6Eh						

LEGEND: R/W = Read/Write; R = Read only; -n = value after reset

Table 106. Limiter Configuration 3 Field Descriptions

Bit	Field	Type	Reset	Description
7	Reserved	RW	0h	Reserved
6-0	LIM_TH_MAX[6:0]	RW	6Eh	Limiter max threshold. 00h = 2 V 01h = 2.1 V ... 6Eh = 13 V ... 7Eh = 14.6 V 7Fh = 14.7 V

8.5.2.26 LIM_CFG4 (book=0x00 page=0x00 address=0x19) [reset=1Eh]

Sets limiter min threshold.

Figure 80. LIM_CFG4 Register Address: 0x19

7	6	5	4	3	2	1	0
Reserved	LIM_TH_MIN[6:0]						
RW-0h	RW-1Eh						

LEGEND: R/W = Read/Write; R = Read only; -n = value after reset

Table 107. Limiter Configuration 4 Field Descriptions

Bit	Field	Type	Reset	Description
7	Reserved	RW	0h	Reserved
6-0	LIM_TH_MIN[6:0]	RW	1Eh	Limiter min threshold. 00h = 2 V 01h = 2.1 V ... 1Eh = 5 V ... 7Eh = 14.6 V 7Fh = 14.7 V

Copyright © 2017–2018, Texas Instruments Incorporated

8.5.2.27 LIM_CFG5 (book=0x00 page=0x00 address=0x1A) [reset=58h]

Sets limiter inflection point.

Figure 81. LIM_CFG5 Register Address: 0x1A

7	6	5	4	3	2	1	0
Reserved	LIM_INF_PT[6:0]						
RW-0h	RW-58h						

LEGEND: R/W = Read/Write; R = Read only; -n = value after reset

Table 108. Limiter Configuration 5 Field Descriptions

Bit	Field	Type	Reset	Description
7	Reserved	RW	0h	Reserved
6-0	LIM_INF_PT[6:0]	RW	58h	Limiter inflection point. 00h = 2 V 01h = 2.1 V ... 58h = 10.8 V ... 7Eh = 14.6 V 7Fh = 14.7 V

8.5.2.28 BOP_CFG0 (book=0x00 page=0x00 address=0x1B) [reset=1h]

Sets BOP infinite hold clear, infinite hold enable, mute on brown out and enable.

Figure 82. BOP_CFG0 Register Address: 0x1B

7	6	5	4	3	2	1	0
Reserved	EN_BO_RECOVERY_HYSTERSIS	LIM_SLOPE[1:0]		BOP_HLD_CLR	BOP_INF_HLD	BOP_MUTE	BOP_EN
RW-0h	RW-0h	RW-0h		RW-0h	RW-0h	RW-0h	RW-1h

LEGEND: R/W = Read/Write; R = Read only; -n = value after reset

Table 109. Brown Out Prevention 0 Field Descriptions

Bit	Field	Type	Reset	Description
7	Reserved	RW	0h	Reserved
6	EN_BO_RECOVERY_HYSTERSIS	RW	0h	
5-4	LIM_SLOPE[1:0]	RW	0h	Limiter VBAT tracking slope. 00b = 1 V/V 01b = 1.5 V/V 10b = 2 V/V 11b = 4 V/V
3	BOP_HLD_CLR	RW	0h	BOP infinite hold clear (self clearing). 0b = Don't clear 1b = Clear
2	BOP_INF_HLD	RW	0h	Infinite hold on brown out event. 0b = Use BOP_HLD_TM after brown out event 1b = Don't release until BOP_HLD_CLR is asserted high
1	BOP_MUTE	RW	0h	Mute on brown out event. 0b = Don't mute 1b = Mute followed by device shutdown
0	BOP_EN	RW	1h	Brown out prevention enable. 0b = Disabled 1b = Enabled

8.5.2.29 BOP_CFG1 (book=0x00 page=0x00 address=0x1C) [reset=14h]

BOP threshold.

Copyright © 2017–2018, Texas Instruments Incorporated

Figure 83. BOP_CFG1 Register Address: 0x1C

7	6	5	4	3	2	1	0
BOP_TH[7:0]							
RW-14h							

LEGEND: R/W = Read/Write; R = Read only; -n = value after reset

Table 110. Brown Out Prevention 1 Field Descriptions

Bit	Field	Type	Reset	Description
7-0	BOP_TH[7:0]	RW	14h	Brown out prevention threshold. 00h = 4.5 V 01h = 4.525 V ... 14h = 5.0 V ... FEh = 10.85 V FFh = 10.875 V

8.5.2.30 BOP_CFG2 (book=0x00 page=0x00 address=0x1D) [reset=4Eh]

BOP attack rate, attack step size and hold time.

Figure 84. BOP_CFG2 Register Address: 0x1D

7	6	5	4	3	2	1	0
BOP_ATK_RT[2:0]			BOP_ATK_ST[1:0]		BOP_HLD_TM[2:0]		
RW-2h			RW-1h		RW-6h		

LEGEND: R/W = Read/Write; R = Read only; -n = value after reset

Table 111. Brown Out Prevention 2 Field Descriptions

Bit	Field	Type	Reset	Description
7-5	BOP_ATK_RT[2:0]	RW	2h	Brown out prevention attack rate. 000b = 5 us/step 001b = 10 us/step 010b = 20 us/step 011b = 40 us/step 100b = 80 us/step 101b = 160 us/step 110b = 320 us/step 111b = 640 us/step
4-3	BOP_ATK_ST[1:0]	RW	1h	Brown out prevention attack step size. 00b = 0.5 dB 01b = 1 dB 10b = 1.5 dB 11b = 2 dB
2-0	BOP_HLD_TM[2:0]	RW	6h	Brown out prevention hold time. 000b = 0 ms 001b = 10 ms 010b = 25 ms 011b = 50 ms 100b = 100 ms 101b = 250 ms 110b = 500 ms 111b = 1000 ms

8.5.2.31 ICLA_CFG0 (book=0x00 page=0x00 address=0x1E) [reset=0h]

ICLA starting time slot and enable.

Figure 85. ICLA_CFG0 Register Address: 0x1E

7	6	5	4	3	2	1	0
ICLA_USE_MAX	ICLA_SLOT[5:0]						ICLA_EN
RW-0h	RW-0h						RW-0h

LEGEND: R/W = Read/Write; R = Read only; -n = value after reset

Table 112. Inter Chip Limiter Alignment 0 Field Descriptions

Bit	Field	Type	Reset	Description
7	ICLA_USE_MAX	RW	0h	Inter chip limiter alignment min/max config 0b = Use the maximum of the ICLA group gain reduction 1b = Use the minimum of the ICLA group gain reduction
6-1	ICLA_SLOT[5:0]	RW	0h	Inter chip limiter alignment starting time slot.
0	ICLA_EN	RW	0h	Inter chip limiter alignment enable. 0b = Disabled 1b = Enabled

8.5.2.32 ICLA_CFG1 (book=0x00 page=0x00 address=0x1F) [reset=0h]

ICLA time slot enables.

Figure 86. ICLA_CFG1 Register Address: 0x1F

7	6	5	4	3	2	1	0
ICLA_SEN[7]	ICLA_SEN[6]	ICLA_SEN[5]	ICLA_SEN[4]	ICLA_SEN[3]	ICLA_SEN[2]	ICLA_SEN[1]	ICLA_SEN[0]
RW-0h	RW-0h	RW-0h	RW-0h	RW-0h	RW-0h	RW-0h	RW-0h

LEGEND: R/W = Read/Write; R = Read only; -n = value after reset

Table 113. Inter Chip Limiter Alignment 1 Field Descriptions

Bit	Field	Type	Reset	Description
7	ICLA_SEN[7]	RW	0h	Time slot equals ICLA_SLOT[5:0]+7. When enabled, the limiter will include this time slot in the alignment group. 0b = Disabled 1b = Enabled
6	ICLA_SEN[6]	RW	0h	Time slot equals ICLA_SLOT[5:0]+6. When enabled, the limiter will include this time slot in the alignment group. 0b = Disabled 1b = Enabled
5	ICLA_SEN[5]	RW	0h	Time slot equals ICLA_SLOT[5:0]+5. When enabled, the limiter will include this time slot in the alignment group. 0b = Disabled 1b = Enabled
4	ICLA_SEN[4]	RW	0h	Time slot equals ICLA_SLOT[5:0]+4. When enabled, the limiter will include this time slot in the alignment group. 0b = Disabled 1b = Enabled
3	ICLA_SEN[3]	RW	0h	Time slot equals ICLA_SLOT[5:0]+3. When enabled, the limiter will include this time slot in the alignment group. 0b = Disabled 1b = Enabled
2	ICLA_SEN[2]	RW	0h	Time slot equals ICLA_SLOT[5:0]+2. When enabled, the limiter will include this time slot in the alignment group. 0b = Disabled 1b = Enabled
1	ICLA_SEN[1]	RW	0h	Time slot equals ICLA_SLOT[5:0]+1. When enabled, the limiter will include this time slot in the alignment group. 0b = Disabled 1b = Enabled

Copyright © 2017–2018, Texas Instruments Incorporated

Table 113. Inter Chip Limiter Alignment 1 Field Descriptions (continued)

Bit	Field	Type	Reset	Description
0	ICLA_SEN[0]	RW	0h	Time slot equals ICLA_SLOT[5:0]. When enabled, the limiter will include this time slot in the alignment group. 0b = Disabled 1b = Enabled

8.5.2.33 INT_MASK0 (book=0x00 page=0x00 address=0x20) [reset=FCh]

Interrupt masks.

Figure 87. INT_MASK0 Register Address: 0x20

7	6	5	4	3	2	1	0
INT_MASK[7]	INT_MASK[6]	INT_MASK[5]	INT_MASK[4]	INT_MASK[3]	INT_MASK[2]	INT_MASK[1]	INT_MASK[0]
RW-1h	RW-1h	RW-1h	RW-1h	RW-1h	RW-1h	RW-0h	RW-0h

LEGEND: R/W = Read/Write; R = Read only; -n = value after reset

Table 114. Interrupt Mask 0 Field Descriptions

Bit	Field	Type	Reset	Description
7	INT_MASK[7]	RW	1h	Limiter mute mask. 0b = Don't Mask 1b = Mask
6	INT_MASK[6]	RW	1h	Limiter infinite hold mask. 0b = Don't Mask 1b = Mask
5	INT_MASK[5]	RW	1h	Limiter max attenuation mask. 0b = Don't Mask 1b = Mask
4	INT_MASK[4]	RW	1h	VBAT <N521 Inflection Point mask. 0b = Don't Mask 1b = Mask
3	INT_MASK[3]	RW	1h	Limiter active mask. 0b = Don't Mask 1b = Mask
2	INT_MASK[2]	RW	1h	TDM clock error mask. 0b = Don't Mask 1b = Mask
1	INT_MASK[1]	RW	0h	Over current error mask. 0b = Don't Mask 1b = Mask
0	INT_MASK[0]	RW	0h	Over temp error mask. 0b = Don't Mask 1b = Mask

8.5.2.34 INT_MASK1 (book=0x00 page=0x00 address=0x21) [reset=B1h]

Interrupt masks.

Figure 88. INT_MASK1 Register Address: 0x21

7	6	5	4	3	2	1	0
INT_MASK[14]	Reserved	Reserved	Reserved	INT_MASK[11]	INT_MASK[10]	INT_MASK[9]	INT_MASK[8]
RW-1h	RW-0h	RW-1h	RW-1h	RW-0h	RW-0h	RW-0h	RW-1h

LEGEND: R/W = Read/Write; R = Read only; -n = value after reset

Copyright © 2017–2018, Texas Instruments Incorporated

Table 115. Interrupt Mask 1 Field Descriptions

Bit	Field	Type	Reset	Description
7	INT_MASK[14]	RW	1h	PDM audio data invalid mask. 0b = Don't Mask 1b = Mask
6	Reserved	RW	0h	Reserved
5	Reserved	RW	1h	Reserved
4	Reserved	RW	1h	Reserved
3	INT_MASK[11]	RW	0h	VBAT OVLO mask. 0b = Don't Mask 1b = Mask
2	INT_MASK[10]	RW	0h	VBAT UVLO mask. 0b = Don't Mask 1b = Mask
1	INT_MASK[9]	RW	0h	VBAT Brown out mask 0b = Don't Mask 1b = Mask
0	INT_MASK[8]	RW	1h	PDM clock error mask. 0b = Don't Mask 1b = Mask

8.5.2.35 INT_LIVE0 (book=0x00 page=0x00 address=0x22) [reset=0h]

Live interrupt readback.

Figure 89. INT_LIVE0 Register Address: 0x22

7	6	5	4	3	2	1	0
INT_LIVE[7]	INT_LIVE[6]	INT_LIVE[5]	INT_LIVE[4]	INT_LIVE[3]	INT_LIVE[2]	INT_LIVE[1]	INT_LIVE[0]
R-0h	R-0h	R-0h	R-0h	R-0h	R-0h	R-0h	R-0h

LEGEND: R/W = Read/Write; R = Read only; -n = value after reset

Table 116. Live Interrupt Readback 0 Field Descriptions

Bit	Field	Type	Reset	Description
7	INT_LIVE[7]	R	0h	Interrupt due to limiter mute. 0b = No interrupt 1b = Interrupt
6	INT_LIVE[6]	R	0h	Interrupt due to limiter infinite hold. 0b = No interrupt 1b = Interrupt
5	INT_LIVE[5]	R	0h	Interrupt due to limiter max attenuation. 0b = No interrupt 1b = Interrupt
4	INT_LIVE[4]	R	0h	Interrupt due to VBAT below limiter inflection point. 0b = No interrupt 1b = Interrupt
3	INT_LIVE[3]	R	0h	Interrupt due to limiter active. 0b = No interrupt 1b = Interrupt
2	INT_LIVE[2]	R	0h	Interrupt due to TDM clock error. 0b = No interrupt 1b = Interrupt
1	INT_LIVE[1]	R	0h	Interrupt due to over current error. 0b = No interrupt 1b = Interrupt
0	INT_LIVE[0]	R	0h	Interrupt due to over temp error. 0b = No interrupt 1b = Interrupt

Copyright © 2017–2018, Texas Instruments Incorporated

8.5.2.36 INT_LIVE1 (book=0x00 page=0x00 address=0x23) [reset=0h]

Live interrupt readback.

Figure 90. INT_LIVE1 Register Address: 0x23

7	6	5	4	3	2	1	0
INT_LIVE[15]	Reserved	Reserved	Reserved	INT_LIVE[11]	INT_LIVE[10]	INT_LIVE[9]	INT_LIVE[8]
R-0h	R-0h	R-0h	R-0h	R-0h	R-0h	R-0h	R-0h

LEGEND: R/W = Read/Write; R = Read only; -n = value after reset

Table 117. Live Interrupt Readback 1 Field Descriptions

Bit	Field	Type	Reset	Description
7	INT_LIVE[15]	R	0h	Interrupt due to PDM audio data invalid 0b = No interrupt 1b = Interrupt
6	Reserved	R	0h	Reserved
5	Reserved	R	0h	Reserved
4	Reserved	R	0h	Reserved
3	INT_LIVE[11]	R	0h	Interrupt due to VBAT OVLO flag. 0b = No interrupt 1b = Interrupt
2	INT_LIVE[10]	R	0h	Interrupt due to VBAT UVLO flag. 0b = No interrupt 1b = Interrupt
1	INT_LIVE[9]	R	0h	Interrupt due to VBAT brown out flag. 0b = No interrupt 1b = Interrupt
0	INT_LIVE[8]	R	0h	Interrupt due to PDM clock error. 0b = No interrupt 1b = Interrupt

8.5.2.37 INT_LTCH0 (book=0x00 page=0x00 address=0x24) [reset=0h]

Latched interrupt readback.

Figure 91. INT_LTCH0 Register Address: 0x24

7	6	5	4	3	2	1	0
INT_LTCH[7]	INT_LTCH[6]	INT_LTCH[5]	INT_LTCH[4]	INT_LTCH[3]	INT_LTCH[2]	INT_LTCH[1]	INT_LTCH[0]
R-0h	R-0h	R-0h	R-0h	R-0h	R-0h	R-0h	R-0h

LEGEND: R/W = Read/Write; R = Read only; -n = value after reset

Table 118. Latched Interrupt Readback 0 Field Descriptions

Bit	Field	Type	Reset	Description
7	INT_LTCH[7]	R	0h	Interrupt due to limiter mute (read to clear). 0b = No interrupt 1b = Interrupt
6	INT_LTCH[6]	R	0h	Interrupt due to limiter infinite hold (read to clear). 0b = No interrupt 1b = Interrupt
5	INT_LTCH[5]	R	0h	Interrupt due to limiter max attenuation (read to clear). 0b = No interrupt 1b = Interrupt
4	INT_LTCH[4]	R	0h	Interrupt due to VBAT < limiter inflection point (read to clear). 0b = No interrupt 1b = Interrupt
3	INT_LTCH[3]	R	0h	Interrupt due to limiter active (read to clear). 0b = No interrupt 1b = Interrupt

Copyright © 2017–2018, Texas Instruments Incorporated

Table 118. Latched Interrupt Readback 0 Field Descriptions (continued)

Bit	Field	Type	Reset	Description
2	INT_LTCH[2]	R	0h	Interrupt due to TDM clock error (read to clear). 0b = No interrupt 1b = Interrupt
1	INT_LTCH[1]	R	0h	Interrupt due to over current error (read to clear). 0b = No interrupt 1b = Interrupt
0	INT_LTCH[0]	R	0h	Interrupt due to over temp error (read to clear). 0b = No interrupt 1b = Interrupt

8.5.2.38 INT_LTCH1 (book=0x00 page=0x00 address=0x25) [reset=0h]

Latched interrupt readback.

Figure 92. INT_LTCH1 Register Address: 0x25

7	6	5	4	3	2	1	0
INT_LTCH[15]	Reserved	Reserved	Reserved	INT_LTCH[11]	INT_LTCH[10]	INT_LTCH[9]	INT_LTCH[8]
R-0h	R-0h	R-0h	R-0h	R-0h	R-0h	R-0h	R-0h

LEGEND: R/W = Read/Write; R = Read only; -n = value after reset

Table 119. Latched Interrupt Readback 1 Field Descriptions

Bit	Field	Type	Reset	Description
7	INT_LTCH[15]	R	0h	Interrupt due to PDM audio data invalid. (read to clear). 0b = No interrupt 1b = Interrupt
6	Reserved	R	0h	Reserved
5	Reserved	R	0h	Reserved
4	Reserved	R	0h	Reserved
3	INT_LTCH[11]	R	0h	Interrupt due to VBAT OVLO flag (read to clear). 0b = No interrupt 1b = Interrupt
2	INT_LTCH[10]	R	0h	Interrupt due to VBAT UVLO flag (read to clear). 0b = No interrupt 1b = Interrupt
1	INT_LTCH[9]	R	0h	Interrupt due to VBAT brown out flag (read to clear). 0b = No interrupt 1b = Interrupt
0	INT_LTCH[8]	R	0h	Interrupt due to PDM clock error (read to clear). 0b = No interrupt 1b = Interrupt

8.5.2.39 INT_LTCH2 (book=0x00 page=0x00 address=0x26) [reset=0h]

Table 120. INT_LTCH2 Register Address: 0x26

7	6	5	4	3	2	1	0
INT_LTCH[23]	INT_LTCH[22]	INT_LTCH[21]	INT_LTCH[20]	INT_LTCH[19]	INT_LTCH[18]	INT_LTCH[17]	INT_LTCH[16]
R-0h	R-0h	R-0h	R-0h	R-0h	R-0h	R-0h	R-0h

LEGEND: R/W = Read/Write; R = Read only; -n = value after reset

Table 121. INT_LTCH2 Field Descriptions

Bit	Field	Type	Reset	Description
7	INT_LTCH[23]	R	0h	Interrupt due to clock halt flag (read to clear) 0b = No interrupt 1b = Interrupt

Copyright © 2017–2018, Texas Instruments Incorporated

Table 121. INT_LTCH2 Field Descriptions (continued)

Bit	Field	Type	Reset	Description
6	INT_LTCH[22]	R	0h	Interrupt due to DMA Request to DSP lost flag (read to clear) 0b = No interrupt 1b = Interrupt
5	INT_LTCH[21]	R	0h	Interrupt due to Auto Trim converged status (read to clear) 0b = No interrupt 1b = Interrupt
4	INT_LTCH[20]	R	0h	Interrupt due to Class D Clamp status flag (read to clear) 0b = No interrupt 1b = Interrupt
3	INT_LTCH[19]	R	0h	Interrupt due to HIGH SIDE OC flag (read to clear). 0b = No interrupt 1b = Interrupt
2	INT_LTCH[18]	R	0h	Interrupt due to LOW SIDE OC flag (read to clear). 0b = No interrupt 1b = Interrupt
1	INT_LTCH[17]	R	1h	Interrupt due to LDO 5 V PG flag (read to clear). 0b = No interrupt 1b = Interrupt
0	INT_LTCH[16]	R	0h	Interrupt due to LDO 5 V OL (read to clear). 0b = No interrupt 1b = Interrupt

8.5.2.40 VBAT_MSB (book=0x00 page=0x00 address=0x27) [reset=0h]

MSBs of SAR ADC VBAT conversion.

Figure 93. VBAT_MSB Register Address: 0x27

7	6	5	4	3	2	1	0
VBAT_CNV[11:4]							
R-0h							

LEGEND: R/W = Read/Write; R = Read only; -n = value after reset

Table 122. SAR ADC Conversion 0 Field Descriptions

Bit	Field	Type	Reset	Description
7--4	VBAT_CNV[11:0]	R	0h	Returns SAR ADC VBAT conversion MSBs.

8.5.2.41 VBAT_LSB (book=0x00 page=0x00 address=0x28) [reset=0h]

LSBs of SAR ADC VBAT conversion.

Figure 94. VBAT_LSB Register Address: 0x28

7	6	5	4	3	2	1	0
VBAT_CNV[3:0]				Reserved			
R-0h				R-0h			

LEGEND: R/W = Read/Write; R = Read only; -n = value after reset

Table 123. SAR ADC Conversion 1 Field Descriptions

Bit	Field	Type	Reset	Description
7-4	VBAT_CNV[3:0]	R	0h	Returns SAR ADC VBAT conversion LSBs.
3-0	Reserved	R	0h	Reserved

Copyright © 2017–2018, Texas Instruments Incorporated

8.5.2.42 TEMP_MSB (book=0x00 page=0x00 address=0x29) [reset=0h]

SARD ADC Temp conversion.

Figure 95. TEMP_MSB Register Address: 0x29

7	6	5	4	3	2	1	0
TMP_CNV[11:4]							
R-0h							

LEGEND: R/W = Read/Write; R = Read only; -n = value after reset

Table 124. SAR ADC Conversion 2 Field Descriptions

Bit	Field	Type	Reset	Description
7--4	TMP_CNV[11:0]	R	0h	Returns SAR ADC temp sensor conversion.

8.5.2.43 TEMP_LSB (book=0x00 page=0x00 address=0x2A) [reset=0h]

SARD ADC Temp conversion.

Figure 96. TEMP_LSB Register Address: 0x2A

7	6	5	4	3	2	1	0
TMP_CNV[3:0]				Reserved			
-0h				R-0h			

LEGEND: R/W = Read/Write; R = Read only; -n = value after reset

Table 125. SAR ADC Conversion 2 Field Descriptions

Bit	Field	Type	Reset	Description
7-4	TMP_CNV[3:0]		0h	Returns SAR ADC temp sensor conversion.
3-0	Reserved	R	0h	Reserved

8.5.2.44 INT_CFG (book=0x00 page=0x00 address=0x30) [reset=5h]

Sets whether latched or live interrupts will trigger IRQZ pin.

Figure 97. INT_CFG Register Address: 0x30

7	6	5	4	3	2	1	0
Reserved						IRQZ_PIN_CFG[1:0]	
RW-0h						RW-1h	

LEGEND: R/W = Read/Write; R = Read only; -n = value after reset

Table 126. Interrupt Configuration Field Descriptions

Bit	Field	Type	Reset	Description
7-2	Reserved	RW	0h	Reserved
1-0	IRQZ_PIN_CFG[1:0]	RW	1h	IRQZ interrupt configuration. 00b = IRQZ will assert on any unmasked live interrupts 01b = IRQZ will assert on any unmasked latched interrupts 10b = IRQZ will assert for 2ms one time on any unmasked live interrupt event 11b = IRQZ will assert for 2ms every 4ms on any unmasked latched interrupts

8.5.2.45 DIN_PD (book=0x00 page=0x00 address=0x31) [reset=0h]

Sets enables of input pin weak pull down.

Copyright © 2017–2018, Texas Instruments Incorporated

Figure 98. DIN_PD Register Address: 0x31

7	6	5	4	3	2	1	0
DIN_PD[7]	DIN_PD[6]	DIN_PD[5]	DIN_PD[4]	Reserved	DIN_PD[2]	Reserved	DIN_PD[0]
RW-0h	RW-0h	RW-0h	RW-0h	RW-0h	RW-0h	RW-0h	RW-0h

LEGEND: R/W = Read/Write; R = Read only; -n = value after reset

Table 127. Digital Input Pin Pull Down Field Descriptions

Bit	Field	Type	Reset	Description
7	DIN_PD[7]	RW	0h	Weak pull down for SDOUT 0b = Disabled 1b = Enabled
6	DIN_PD[6]	RW	0h	Weak pull down for SDIN. 0b = Disabled 1b = Enabled
5	DIN_PD[5]	RW	0h	Weak pull down for FSYNC. 0b = Disabled 1b = Enabled
4	DIN_PD[4]	RW	0h	Weak pull down for SBCLK. 0b = Disabled 1b = Enabled
3	Reserved	RW	0h	Reserved
2	DIN_PD[2]	RW	0h	Weak pull down for PDMD1. 0b = Disabled 1b = Enabled
0	Reserved	RW	0h	Reserved
0	DIN_PD[0]	RW	0h	Weak pull down for PDMCK1. 0b = Disabled 1b = Enabled

8.5.2.46 MISC_IRQ (book=0x00 page=0x00 address=0x32) [reset=81h]

Set IRQZ pin active state

Figure 99. MISC_IRQ Register Address: 0x32

7	6	5	4	3	2	1	0
IRQZ_POL	Reserved			Reserved	Reserved	Reserved	IRQZ_VAL
RW-1h	RW-0h			RW-0h	RW-0h	RW-0h	R-1h

LEGEND: R/W = Read/Write; R = Read only; -n = value after reset

Table 128. Misc Configuration Field Descriptions

Bit	Field	Type	Reset	Description
7	IRQZ_POL	RW	1h	IRQZ pin polarity for interrupt. 0b = Active high (IRQ) 1b = Active low (IRQZ)
6-4	Reserved	RW	0h	Reserved
3	Reserved	RW	0h	Reserved
2	Reserved	RW	0h	Reserved
1	Reserved	RW	0h	Reserved
0	IRQZ_VAL	R	1h	IRQZ bit bang in read value. Default is 1b'1 if there are no interupts/errors 0b = IRQZ Input Buffer Value=0 1b = IRQZ Input Buffer Value=1

8.5.2.47 CLOCK_CFG (book=0x00 page=0x00 address=0x3C) [reset=Dh]

Can override audio configure and set the clocking ratio

Copyright © 2017–2018, Texas Instruments Incorporated

Figure 100. CLOCK_CFG Register Address: 0x3C

7	6	5	4	3	2	1	0
Reserved	Reserved	SBCLK_FS_RATIO[3:0]				AUTO_CLK[1:0]	
RW-0h	RW-0h	RW-3h				RW-1h	

LEGEND: R/W = Read/Write; R = Read only; -n = value after reset

Table 129. Clock Configuration Field Descriptions

Bit	Field	Type	Reset	Description
7	Reserved	RW	0h	Reserved
6	Reserved	RW	0h	Reserved
5-2	SBCLK_FS_RATIO[3:0]	RW	3h	Program manually SBCLK to FS ratio when auto clock detection is disabled 00h = 16 01h = 24 02h = 32 03h = 48 04h = 64 05h = 96 06h = 128 07h = 192 08h = 256 09h = 384 0Ah = 512
1-0	AUTO_CLK[1:0]	RW	1h	Clocking automatic configuraiton 00b = Auto configure clock dividers based on SBCLK to FSYNC ratio 01b = Manually configure clock dividers by programming SBCLK_FS_RATIO

8.5.2.48 TDM_DET (book=0x00 page=0x00 address=0x77) [reset=7Fh]

Readback of internal auto-rate detection.

Figure 101. TDM_DET Register Address: 0x77

7	6	5	4	3	2	1	0
Reserved	FS_RATIO[3:0]				FS_RATE_V[2:0]		
R-0h	R-Fh				R-7h		

LEGEND: R/W = Read/Write; R = Read only; -n = value after reset

Table 130. TDM Clock detection monitor Field Descriptions

Bit	Field	Type	Reset	Description
7	Reserved	R	0h	Reserved
6-3	FS_RATIO[3:0]	R	Fh	Detected SBCLK to FSYNC ratio. 00h = 16 01h = 24 02h = 32 03h = 48 04h = 64 05h = 96 06h = 128 07h = 192 08h = 256 09h = 384 0Ah = 512 0Bh-0Eh = Reserved 0F = Invalid ratio

Copyright © 2017–2018, Texas Instruments Incorporated

Table 130. TDM Clock detection monitor Field Descriptions (continued)

Bit	Field	Type	Reset	Description
2-0	FS_RATE_V[2:0]	R	7h	Detected sample rate of TDM bus. 000b = 7.35/8 KHz 001b = 14.7/16 KHz 010b = 29.4/32 KHz 011b = 44.1/48 KHz 100b = 88.2/96 kHz 101b = 176.4/192 kHz 110b = reserved 111b = Error condition

8.5.2.49 REV_ID (book=0x00 page=0x00 address=0x7D) [reset=20h]

Returns REV and PG ID.

Figure 102. REV_ID Register Address: 0x7D

7	6	5	4	3	2	1	0
REV_ID[3:0]				PG_ID[3:0]			
R-0h				R-0h			

LEGEND: R/W = Read/Write; R = Read only; -n = value after reset

Table 131. Revision and PG ID Field Descriptions

Bit	Field	Type	Reset	Description
7-4	REV_ID[3:0]	R	0h	Returns the revision ID.
3-0	PG_ID[3:0]	R	0h	Returns the PG ID.

8.5.2.50 I2C_CKSUM (book=0x00 page=0x00 address=0x7E) [reset=0h]

Returns I2C checksum.

Figure 103. I2C_CKSUM Register Address: 0x7E

7	6	5	4	3	2	1	0
I2C_CKSUM[7:0]							
RW-0h							

LEGEND: R/W = Read/Write; R = Read only; -n = value after reset

Table 132. I2C Checksum Field Descriptions

Bit	Field	Type	Reset	Description
7-0	I2C_CKSUM[7:0]	RW	0h	Returns I2C checksum. Writing to this register will reset the checksum to the written value. This register is updated on writes to other registers on all books and pages.

8.5.2.51 BOOK (book=0x00 page=0x00 address=0x7F) [reset=0h]

Device's memory map is divided into pages and books. This register sets the book.

Figure 104. BOOK Register Address: 0x7F

7	6	5	4	3	2	1	0
BOOK[7:0]							
RW-0h							

LEGEND: R/W = Read/Write; R = Read only; -n = value after reset

Copyright © 2017–2018, Texas Instruments Incorporated

Table 133. Device Book Field Descriptions

Bit	Field	Type	Reset	Description
7-0	BOOK[7:0]	RW	0h	Sets the device book. 00h = Book 0 01h = Book 1 ... FFh = Book 255

Copyright © 2017–2018, Texas Instruments Incorporated

9 Application and Implementation

NOTE

Information in the following applications sections is not part of the TI component specification, and TI does not warrant its accuracy or completeness. TI's customers are responsible for determining suitability of components for their purposes. Customers should validate and test their design implementation to confirm system functionality.

9.1 Application Information

The TAS2770 is a digital input Class-D audio power amplifier with integrated I/V sense. I2S audio data is supplied by host processor. It also accepts I/V data in I2S format. I^2C bus is used for configuration and control.

9.2 Typical Application

Figure 105 below shows a typical configuration of the TAS2770.

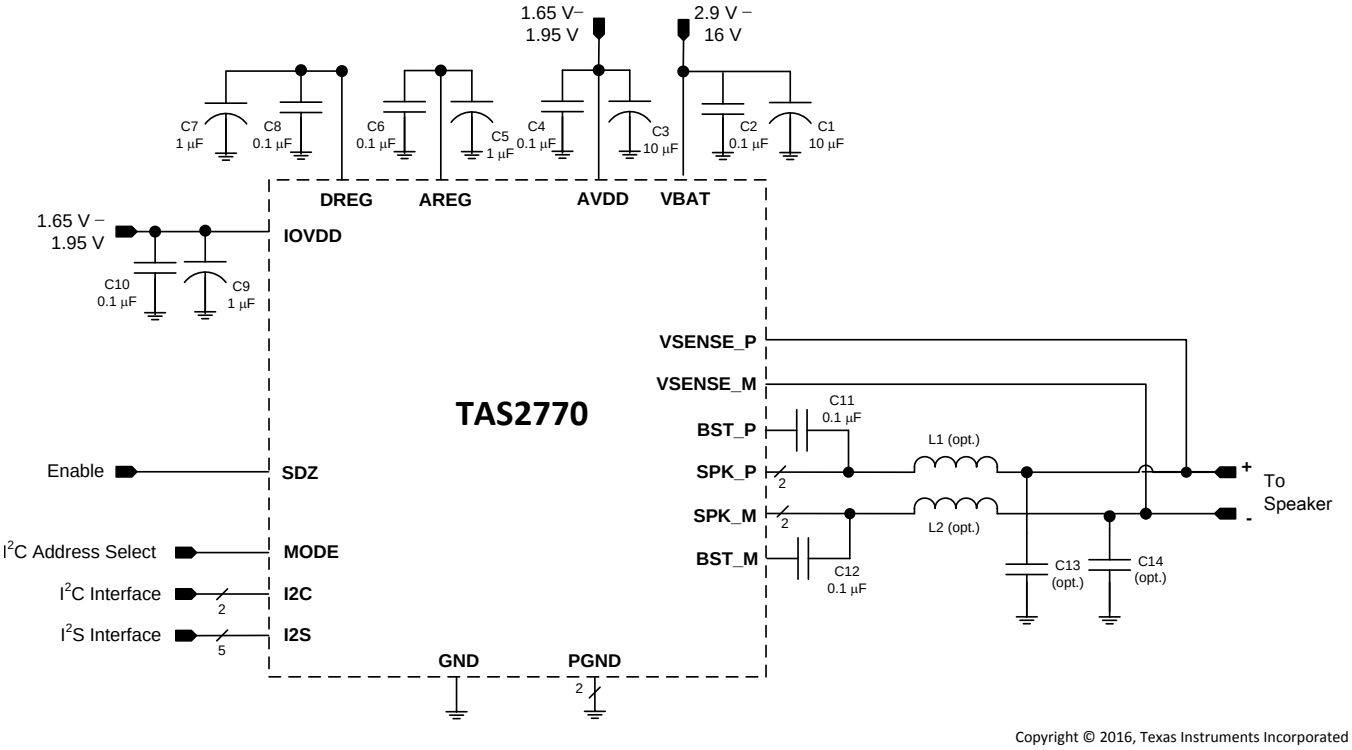

Figure 105. TAS2770 Typical Application

9.2.1 Design Requirements

Table 134 shows the design parameters.

Table 134. Recommended Component Selection

PARAMETER	EXAMPLE VALUE
Amplifier power supply (VBAT)	4.5 V to 16 V
EVM power supply	4.5 V to 16 V
IO power supply (IOVDD)	1.65 V to 1.95 V
Output Power	18.3 W
USB, USB class-audio	Micro-USB B

9.2.2 Detailed Design Procedure

9.2.2.1 Overview

The TAS2770 is a flexible and easy-to-use Class D amplifier. Therefore, the design process is straightforward.

Before beginning the design, gather the following information regarding the audio system:

- VBAT rail planned for the design
- Speaker or load impedance
- Audio sample rate
- Maximum output power requirement

9.2.2.2 Select Input Capacitance

Select the bulk capacitors at the VBAT inputs for proper voltage margin and adequate capacitance to support the power requirements. The TAS2770 has very good PSRR, so the capacitor is more about limiting the ripple and droop for the rest of system than preserving good audio performance. The amount of bulk decoupling can be reduced as long as the droop and ripple is acceptable. One capacitor should be placed near the VBAT pin. VBATY capacitors should be a low ESR type because they are being used in a high-speed switching application.

9.2.2.3 Select Decoupling Capacitors

Good quality decoupling capacitors should be added at each of the VBAT input to provide good reliability, good audio performance, and to meet regulatory requirements. X5R or better ratings should be used in this application. Consider temperature, ripple current, and voltage overshoots when selecting decoupling capacitors.

Also, the decoupling capacitors should be located near the VBAT and GND connections to the device to minimize series inductances.

9.2.2.4 Select Bootstrap Capacitors

Each of the outputs require bootstrap capacitors to provide gate drive for the high-side output FETs. For this design, use 0.1-µF, 25-V capacitors of X5R quality or better.

9.2.3 Application Curves

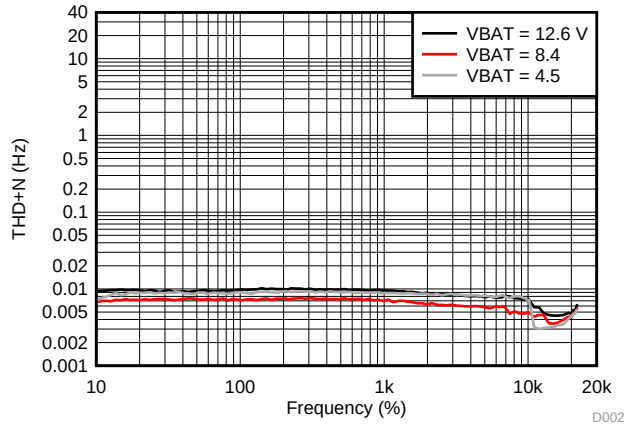

Figure 106. THD+N vs Frequency

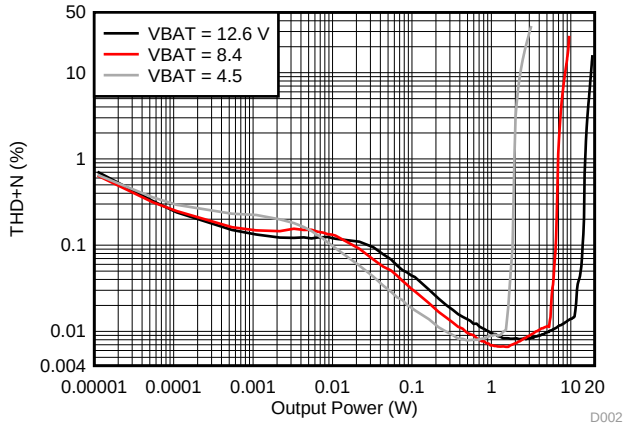

Figure 107. THD+N vs Output Power (W)

Copyright © 2017–2018, Texas Instruments Incorporated

9.3 Initialization Set Up

9.3.1 Initial Device Configuration - Auto Rate

The following I2C sequence is an example of initializing four TAS2770 devices. The devices will be configured to use the TDM auto-rate detection feature. This sequence contains a 1 ms delay required after a software or hardware reset as illustrated in Power Supply Recommendations.

```
w 62 00 00 # Page-0
w 62 7f 00 # Book-0
w 62 01 01 # Software Reset

w 64 00 00 # Page-0
w 64 7f 00 # Book-0
w 64 01 01 # Software Reset

w 66 00 00 # Page-0
w 66 7f 00 # Book-0
w 66 01 01 # Software Reset

w 68 00 00 # Page-0
w 68 7f 00 # Book-0
w 68 01 01 # Software Reset

d 1 # 1mS Delay

###### Configure Channel 1

w 62 3c 11 # sbclk to fs ratio = 64
w 62 0e 33 # TX bus keeper, Hi-Z, offset 1, TX on Falling edge
w 62 0f 42 # TDM TX voltage sense transmit enable with slot 2,
w 62 10 40 # TDM TX current sense transmit enable with slot 0
w 62 03 14 # 21 dB gain
w 62 02 00 # power up audio playback with I,V enabled

###### Configure Channel 2

w 64 3c 11 # sbclk to fs ratio = 64
w 64 0e 13 # TX bus keeper, Hi-Z, offset 1, TX on Falling edge
w 64 0f 46 # TDM TX voltage sense transmit enable with slot 6,
w 64 10 44 # TDM TX current sense transmit enable with slot 4
w 64 03 14 # 21 dB gain
w 64 02 00 # power up audio playback with I,V enabled

###### Configure Channel 3

w 66 3c 11 # sbclk to fs ratio = 64
w 66 0e 13 # TX bus keeper, Hi-Z, offset 1, TX on Falling edge
w 66 0f 4A # TDM TX voltage sense transmit enable with slot 10,
w 66 10 48 # TDM TX current sense transmit enable with slot 8
w 66 03 14 # 21 dB gain
w 66 02 00 # power up audio playback with I,V enabled

###### Configure Channel 4

w 68 3c 11 # sbclk to fs ratio = 64
w 68 0e 13 # TX bus keeper, Hi-Z, offset 1, TX on Falling edge
w 68 0f 4E # TDM TX voltage sense transmit enable with slot 14,
w 68 10 4C # TDM TX current sense transmit enable with slot 12
w 68 03 14 # 21 dB gain
w 68 02 00 # power up audio playback with I,V enabled
```

9.3.2 Initial Device Configuration - 48 kHz

The following I2C sequence is an example of initializing a TAS2770 device into 48 kHz sampling rate. This sequence contains a 1 ms delay required after a software or hardware reset as illustrated in Power Supply Recommendations.

```
w 62 00 00 # Page-0
w 62 7f 00 # Book-0
w 62 01 01 # Software Reset
```

Copyright © 2017–2018, Texas Instruments Incorporated

Initialization Set Up (continued)

```
d 1 # 1mS Delay

###### Configure Channel 1

w 62 3c 21 # sbclk to fs ratio = 256 / 8 TDM Slots
w 62 0a 17 # 48KHz, Auto TDM off, Frame start High to Low
w 62 0b 03 # Offset = 1, Sync on BCLK falling edge
w 62 0c 0a # TDM slot by address, Word = 24 bit, Frame = 32 bit
w 62 0d 20 # Right Ch = TDM slot 2, Left Ch = TDM slot 0
w 62 0e 33 # TX bus keeper, Hi-Z, offset 1, TX on Falling edge
w 62 0f 42 # TDM TX voltage sense transmit enable with slot 2,
w 62 10 40 # TDM TX current sense transmit enable with slot 0
w 62 03 14 # 21 dB gain
w 62 02 00 # power up audio playback with I,V enabled
```

9.3.3 Initial Device Configuration - 44.1 kHz

The following I2C sequence is an example of initializing a TAS2770 device into 48 kHz sampling rate. This sequence contains a 1 ms delay required after a software or hardware reset as illustrated in Power Supply Recommendations.

```
w 62 00 00 # Page-0
w 62 7f 00 # Book-0
w 62 01 01 # Software Reset

d 1 # 1mS Delay

###### Configure Channel 1

w 62 3c 21 # sbclk to fs ratio = 256 / 8 TDM Slots
w 62 0a 37 # 44.1KHz, Auto TDM off, Frame start High to Low
w 62 0b 03 # Offset = 1, Sync on BCLK falling edge
w 62 0c 0a # TDM slot by address, Word = 24 bit, Frame = 32 bit
w 62 0d 20 # Right Ch = TDM slot 2, Left Ch = TDM slot 0
w 62 0e 33 # TX bus keeper, Hi-Z, offset 1, TX on Falling edge
w 62 0f 42 # TDM TX voltage sense transmit enable with slot 2,
w 62 10 40 # TDM TX current sense transmit enable with slot 0
w 62 03 14 # 21 dB gain
w 62 02 00 # power up audio playback with I,V enabled
```

9.3.4 Sample Rate Change - 48 kHz to 44.1kHz

The following I2C sequence is an example of changing the sampling rate from 48 kHz to 44.1 kHz .

```
w 62 07 80 #Set DVC Ramp Rate to 0.5 dB / 8 samples
w 62 02 01 #Mute
d 1
w 62 02 02 #Software shutdown
w 62 0a 37 #44.1KHz, Auto TDM off, Frame start High to Low
### change source sample rate now
w 62 02 01 #Take device out of low-power shutdown
d 1
w 62 02 00 #Un-mute
```

9.3.5 Sample Rate Change - 44.1 kHz to 48 kHz

The following I2C sequence is an example of changing the sampling rate from 44.1 kHz to 48 kHz .

```
w 62 07 80 #Set DVC Ramp Rate to 0.5 dB / 8 samples
w 62 02 01 #Mute
d 1
w 62 02 02 #Software shutdown
w 62 0a 17 #44.1KHz, Auto TDM off, Frame start High to Low
### change source sample rate now
```


Copyright © 2017–2018, Texas Instruments Incorporated

Initialization Set Up (continued)

```
w 62 02 01 #Take device out of low-power shutdown
d 1
w 62 02 00 #Un-mute
```

9.3.6 Device Mute

The following I2C sequence will mute one device at address 62 using a digital volume ramp rate of 0.5dB per 8 samples.

```
w 62 07 80 #Set DVC Ramp Rate to 0.5 dB / 8 samples
w 62 02 01 #Mute
```

9.3.7 Device Un-Mute

The following I2C sequence will un-mute one device at address 62 using a digital volume ramp rate of 0.5dB per 8 samples.

```
w 62 07 80 #Set DVC Ramp Rate to 0.5 dB / 8 samples
w 62 02 00 #Un-Mute
```

9.3.8 Device Sleep

The following I2C sequence will mute the device and put it into low power mode for one device at address 62 using a digital volume ramp rate of 0.5dB per 8 samples.

```
w 62 07 80 #Set DVC Ramp Rate to 0.5 dB / 8 samples
w 62 02 01 #Mute
d 1 # 1mS Delay
w 62 02 02 #Software shutdown
```

9.3.9 Device Wake

The following I2C sequence will wake the device from low power mode (sleep) and un-mute one device at address 62 using a digital volume ramp rate of 0.5dB per 8 samples.

```
w 62 07 80 #Set DVC Ramp Rate to 0.5 dB / 8 samples
w 62 02 01 #Take device out of low-power shutdown
d 1 # 1mS Delay
w 62 02 00 #Un-mute TAS2770
```

Copyright © 2017–2018, Texas Instruments Incorporated

10 Power Supply Recommendations

The power sequence between the supply rails can be applied in any order as long as SDZ pin is held low. Generally VBAT would be applied before IOVDD and AVDD in most system applications. Once all supplies are stable the SDZ pin can be set high to initialize the part. After a hardware or software reset additional commands to the device should be delayed for 1 mS to allow the OTP to load.

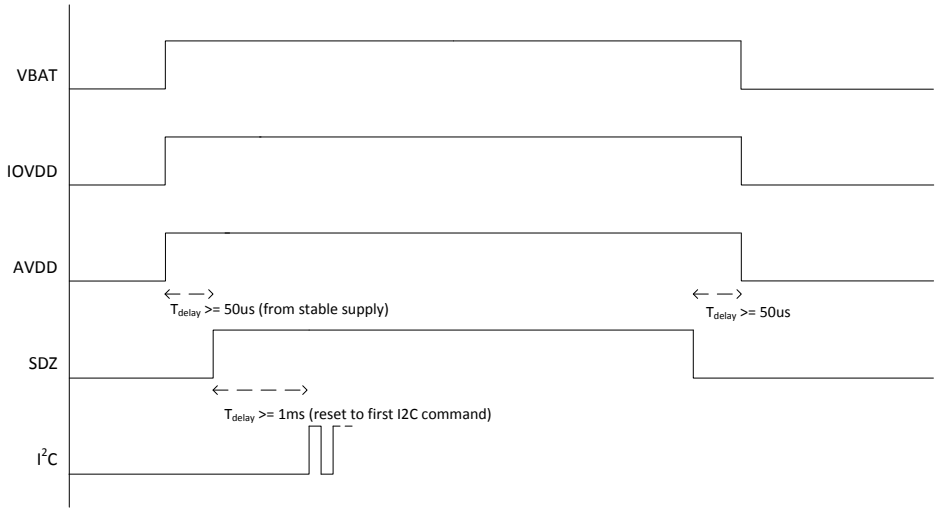

Figure 108. Power Supply Sequence for Power-Up and Power-Down

Copyright © 2017–2018, Texas Instruments Incorporated

11 Layout

11.1 Layout Guidelines

Pay special attention to the power stage power supply layout.

- Use 4.7 µf for decoupling of VBAT supply.
- Keep the current circulating loops containing the supply decoupling capacitors, the H-bridges in the device and the connections to the speakers as tight as possible to reduce emissions.
- Use ground planes to provide the lowest impedance for power and signal current between the device and the decoupling capacitors. The area directly under the device should be treated as a central ground area for the device, and all device grounds must be connected directly to that area.
- Use a via pattern to connect the area directly under the device to the ground planes in copper layers below the surface. This connection helps to dissipate heat from the device.
- Avoid interrupting the ground plane with circular traces around the device. Interruption disconnects the copper and interrupt flow of heat and current. Radial copper traces are better to use if necessary.

11.2 Layout Example

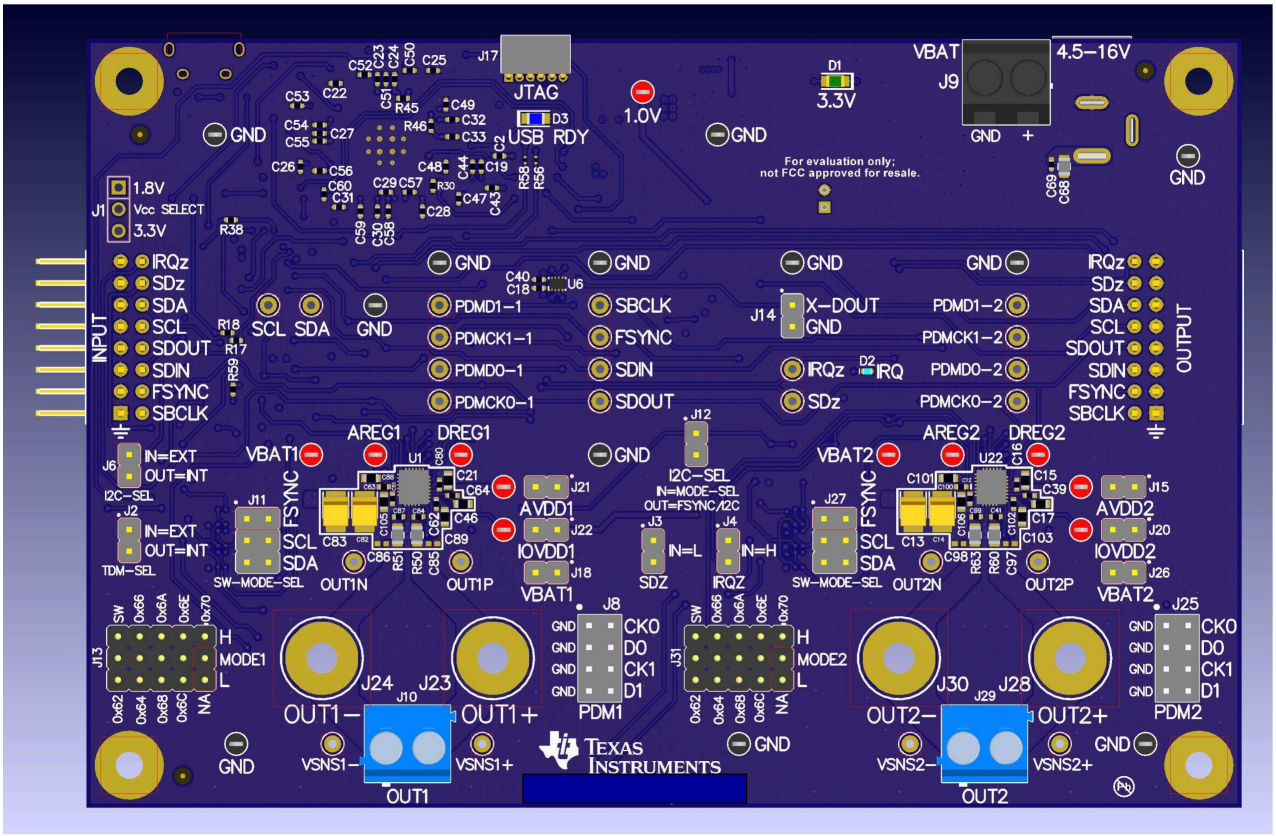

Figure 109. Stereo EVM Layout Diagram

Layout Example (continued)

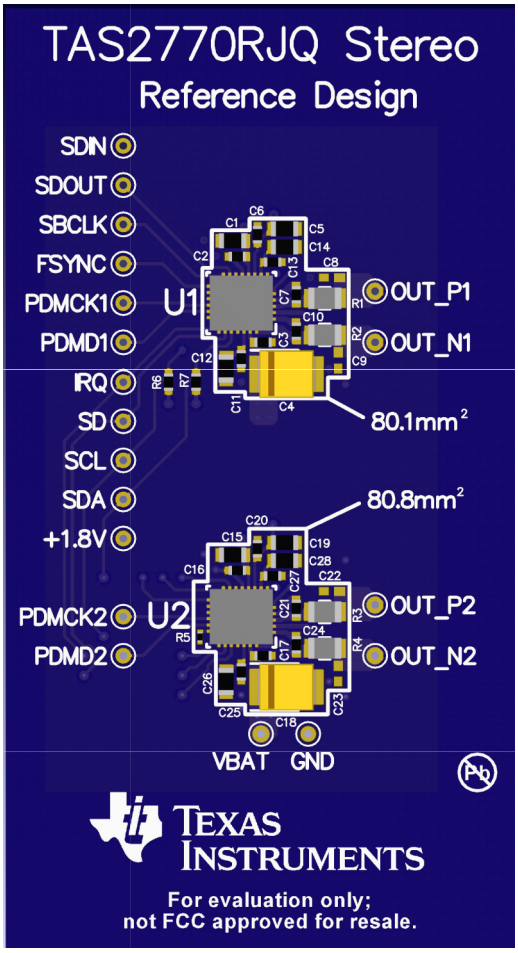

Figure 110. Stereo EVM Layout Reference Design - 01

Copyright © 2017–2018, Texas Instruments Incorporated

Layout Example (continued)

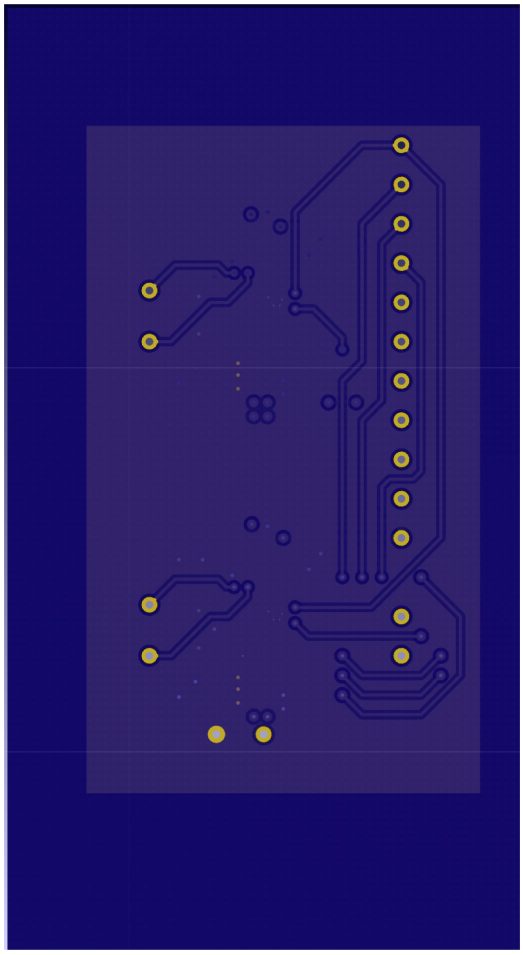

Figure 111. Stereo EVM Layout Reference Design - 02

Copyright © 2017–2018, Texas Instruments Incorporated

Layout Example (continued)

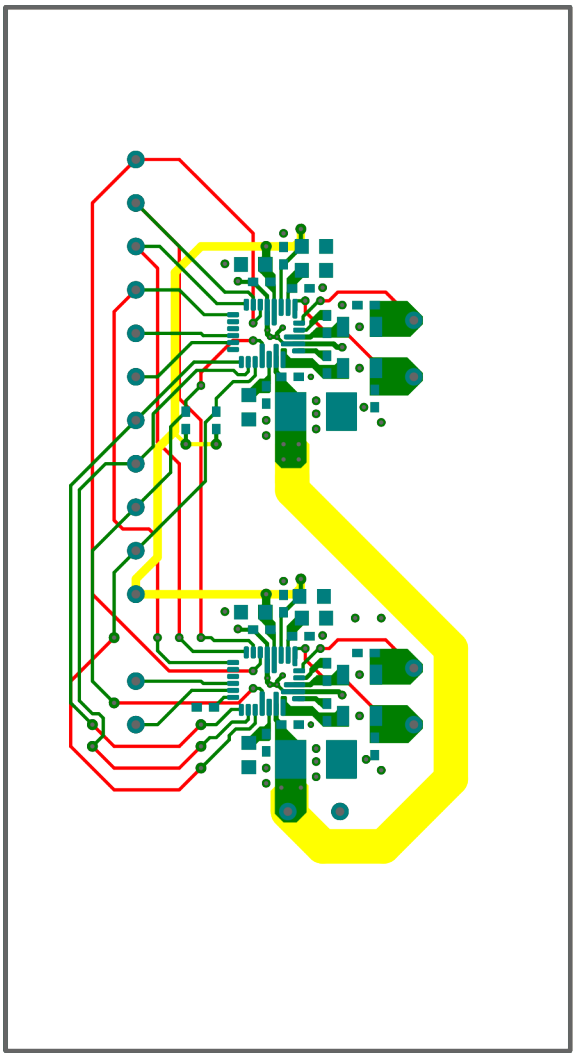

Figure 112. Layout Reference – TAS2770RJQ

Copyright © 2017–2018, Texas Instruments Incorporated

Layout Example (continued)

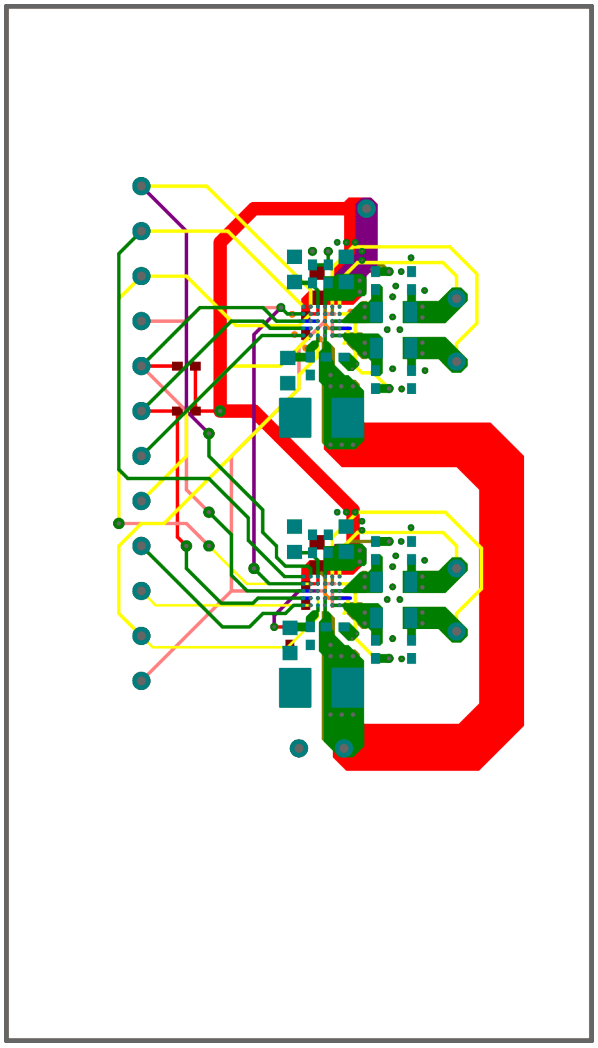

Figure 113. Layout Reference – TAS2770YFF

12 Device and Documentation Support

12.1 Receiving Notification of Documentation Updates

To receive notification of documentation updates, navigate to the device product folder on ti.com. In the upper right corner, click on *Alert me* to register and receive a weekly digest of any product information that has changed. For change details, review the revision history included in any revised document.

12.2 Community Resources

The following links connect to TI community resources. Linked contents are provided "AS IS" by the respective contributors. They do not constitute TI specifications and do not necessarily reflect TI's views; see TI's Terms of Use.

TI E2E™ Online Community ***TI's Engineer-to-Engineer (E2E) Community.*** Created to foster collaboration among engineers. At e2e.ti.com, you can ask questions, share knowledge, explore ideas and help solve problems with fellow engineers.

Design Support ***TI's Design Support*** Quickly find helpful E2E forums along with design support tools and contact information for technical support.

12.3 Trademarks

E2E is a trademark of Texas Instruments.

12.4 Electrostatic Discharge Caution



This integrated circuit can be damaged by ESD. Texas Instruments recommends that all integrated circuits be handled with appropriate precautions. Failure to observe proper handling and installation procedures can cause damage.

ESD damage can range from subtle performance degradation to complete device failure. Precision integrated circuits may be more susceptible to damage because very small parametric changes could cause the device not to meet its published specifications.

12.5 Glossary

SLYZ022 — *TI Glossary*.

This glossary lists and explains terms, acronyms, and definitions.

13 Mechanical, Packaging, and Orderable Information

The following pages include mechanical, packaging, and orderable information. This information is the most current data available for the designated devices. This data is subject to change without notice and revision of this document. For browser-based versions of this data sheet, refer to the left-hand navigation.

Copyright © 2017–2018, Texas Instruments Incorporated

PACKAGE OUTLINE

RJQ0026A

VQFN-HR - 1 mm max height

PLASTIC QUAD FLATPACK- NO LEAD

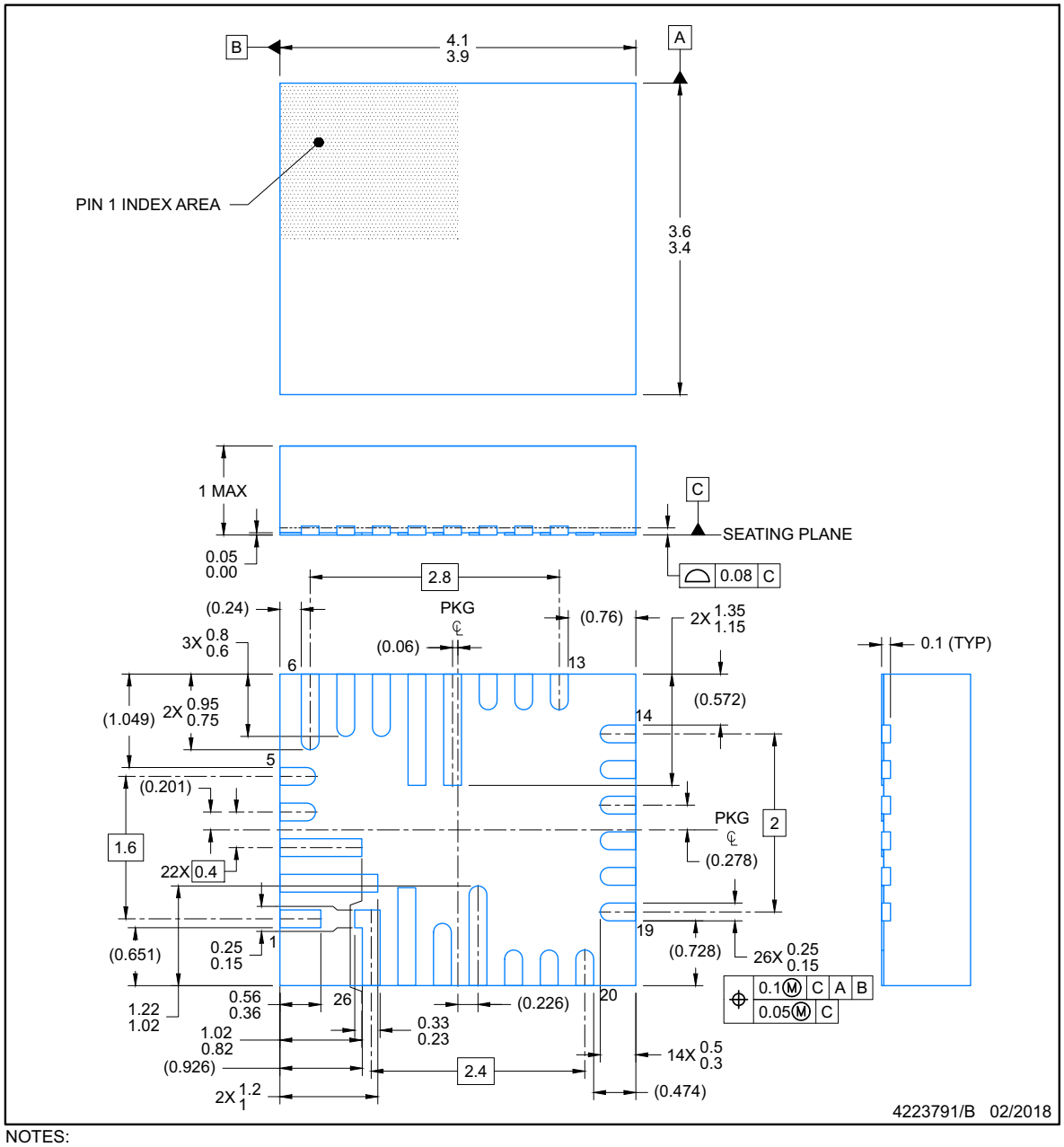

NOTES:

1. All linear dimensions are in millimeters. Any dimensions in parenthesis are for reference only. Dimensioning and tolerancing per ASME Y14.5M.
2. This drawing is subject to change without notice.

Copyright © 2017–2018, Texas Instruments Incorporated

EXAMPLE BOARD LAYOUT

RJQ0026A

VQFN-HR - 1 mm max height

PLASTIC QUAD FLATPACK- NO LEAD

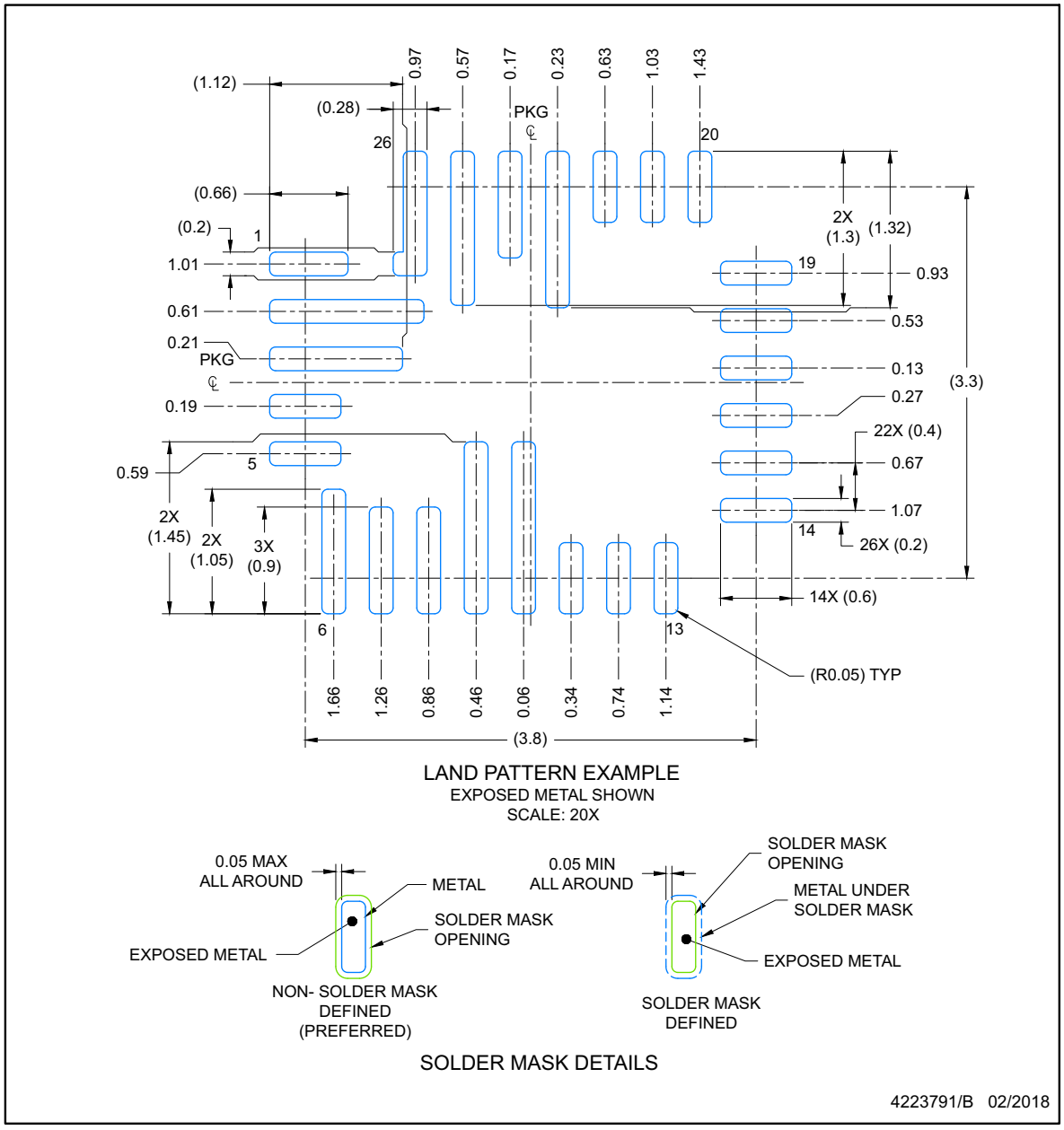

NOTES: (continued)

3. For more information, see Texas Instruments literature number SLUA271 (www.ti.com/lit/slua271) .
4. Solder mask tolerances between and around signal pads can vary based on board fabrication site.

Copyright © 2017–2018, Texas Instruments Incorporated

EXAMPLE STENCIL DESIGN

RJQ0026A

VQFN-HR - 1 mm max height

PLASTIC QUAD FLATPACK- NO LEAD

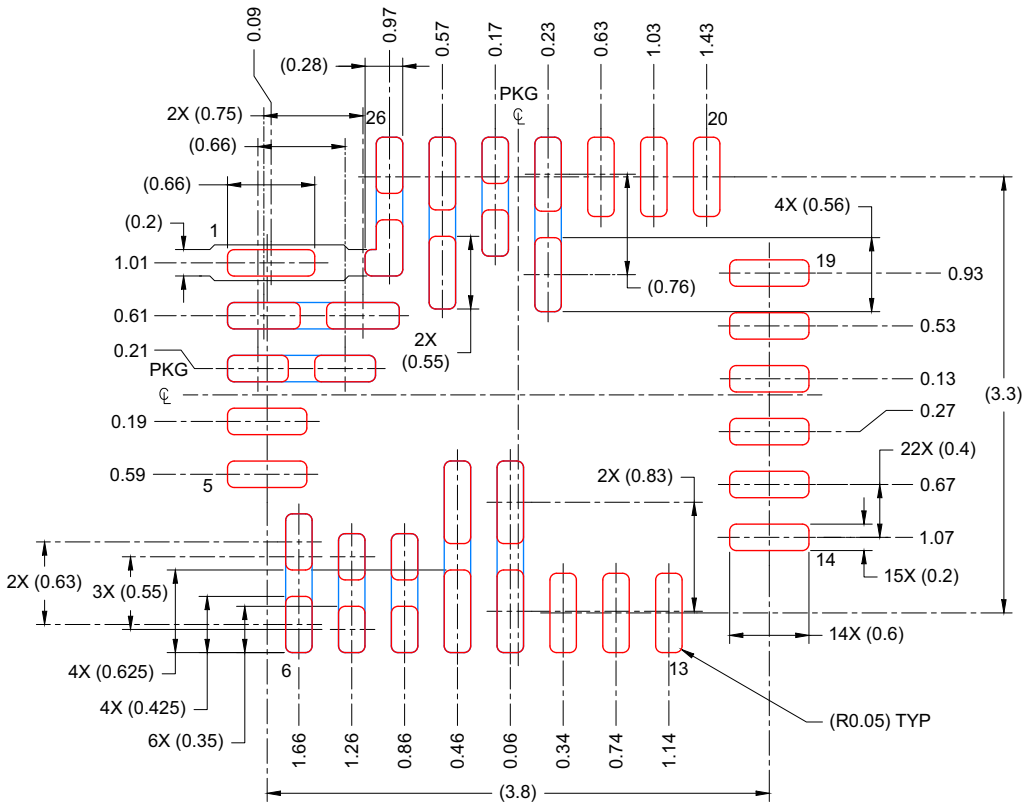

SOLDER PASTE EXAMPLE
BASED ON 0.1mm THICK STENCIL

EXPOSED PAD
84% PRINTED COVERAGE BY AREA
SCALE: 20X

4223791/B 02/2018

NOTES: (continued)

5. Laser cutting apertures with trapezoidal walls and rounded corners may offer better paste release. IPC-7525 may have alternate design recommendations.

Copyright © 2017–2018, Texas Instruments Incorporated

PACKAGE OUTLINE

YFF0030-C02

DSBGA - 0.625 mm max height

DIE SIZE BALL GRID ARRAY

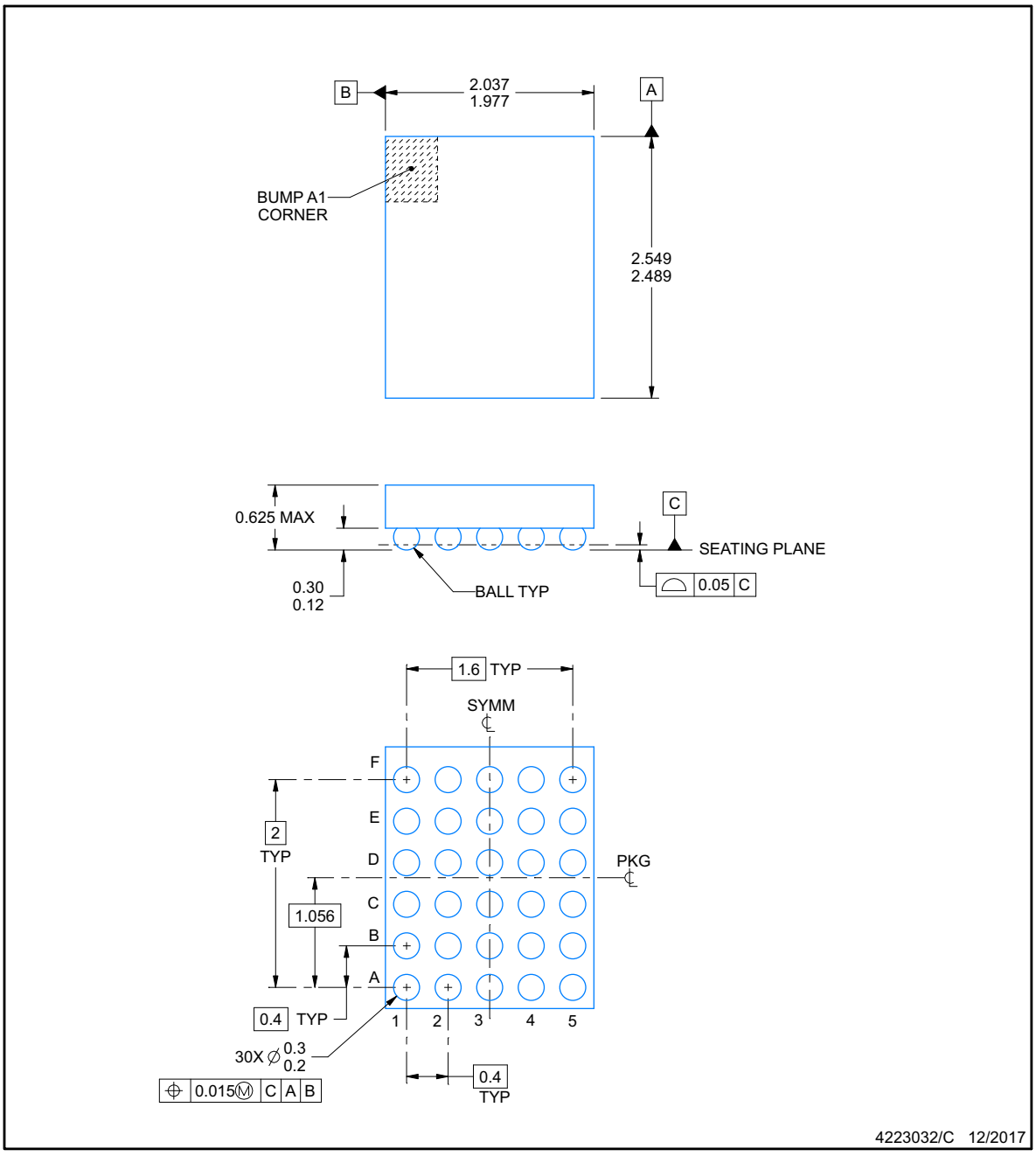

NOTES:

1. All linear dimensions are in millimeters. Any dimensions in parenthesis are for reference only. Dimensioning and tolerancing per ASME Y14.5M.
2. This drawing is subject to change without notice.

Copyright © 2017–2018, Texas Instruments Incorporated

EXAMPLE BOARD LAYOUT

YFF0030-C02

DSBGA - 0.625 mm max height

DIE SIZE BALL GRID ARRAY

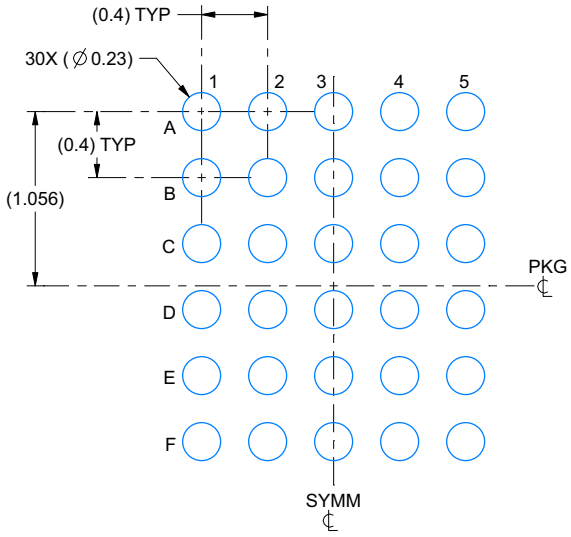

LAND PATTERN EXAMPLE
SCALE:25X

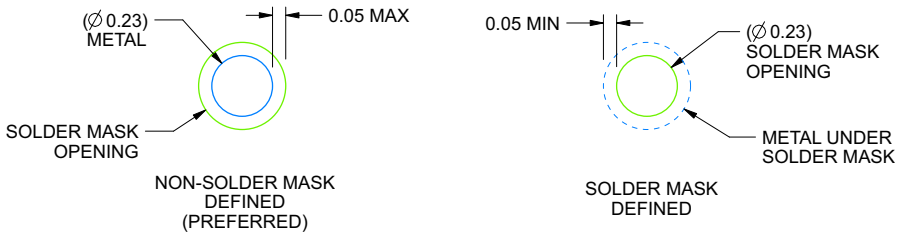

SOLDER MASK DETAILS
NOT TO SCALE

4223032/C 12/2017

NOTES: (continued)

3. Final dimensions may vary due to manufacturing tolerance considerations and also routing constraints. For more information, see Texas Instruments literature number SNVA009 (www.ti.com/lit/snva009).

Copyright © 2017–2018, Texas Instruments Incorporated

EXAMPLE STENCIL DESIGN

YFF0030-C02

DSBGA - 0.625 mm max height

DIE SIZE BALL GRID ARRAY

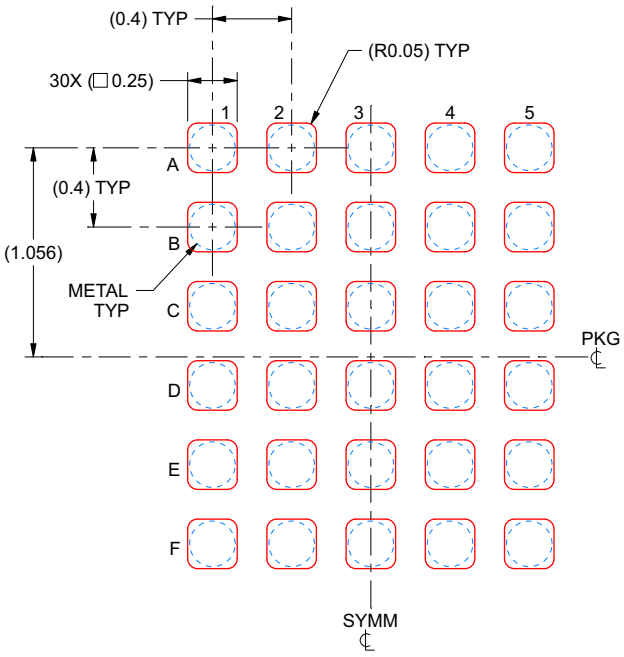

SOLDER PASTE EXAMPLE
BASED ON 0.1 mm THICK STENCIL
SCALE:30X

4223032/C 12/2017

NOTES: (continued)

4. Laser cutting apertures with trapezoidal walls and rounded corners may offer better paste release.

Copyright © 2017–2018, Texas Instruments Incorporated

PACKAGING INFORMATION

Orderable Device	Status (1)	Package Type	Package Drawing	Pins	Package Qty	Eco Plan (2)	Lead/Ball Finish (6)	MSL Peak Temp (3)	Op Temp (°C)	Device Marking (4/5)	Samples
TAS2770RJQR	ACTIVE	VQFN-HR	RJQ	26	3000	Green (RoHS & no Sb/Br)	NIPDAU	Level-2-260C-1 YEAR	-40 to 85	2770	Samples
TAS2770RJQT	ACTIVE	VQFN-HR	RJQ	26	250	Green (RoHS & no Sb/Br)	NIPDAU	Level-2-260C-1 YEAR	-40 to 85	2770	Samples
TAS2770YFFR	ACTIVE	DSBGA	YFF	30	3000	Green (RoHS & no Sb/Br)	SNAGCU	Level-1-260C-UNLIM	-40 to 85	2770	Samples
TAS2770YFFT	ACTIVE	DSBGA	YFF	30	250	Green (RoHS & no Sb/Br)	SNAGCU	Level-1-260C-UNLIM	-40 to 85	2770	Samples

(1) The marketing status values are defined as follows:
ACTIVE: Product device recommended for new designs.
LIFEBUY: TI has announced that the device will be discontinued, and a lifetime-buy period is in effect.
NRND: Not recommended for new designs. Device is in production to support existing customers, but TI does not recommend using this part in a new design.
PREVIEW: Device has been announced but is not in production. Samples may or may not be available.
OBSOLETE: TI has discontinued the production of the device.

(2) **RoHS:** TI defines "RoHS" to mean semiconductor products that are compliant with the current EU RoHS requirements for all 10 RoHS substances, including the requirement that RoHS substance do not exceed 0.1% by weight in homogeneous materials. Where designed to be soldered at high temperatures, "RoHS" products are suitable for use in specified lead-free processes. TI may reference these types of products as "Pb-Free".
RoHS Exempt: TI defines "RoHS Exempt" to mean products that contain lead but are compliant with EU RoHS pursuant to a specific EU RoHS exemption.
Green: TI defines "Green" to mean the content of Chlorine (Cl) and Bromine (Br) based flame retardants meet JS709B low halogen requirements of <=1000ppm threshold. Antimony trioxide based flame retardants must also meet the <=1000ppm threshold requirement.

(3) MSL, Peak Temp. - The Moisture Sensitivity Level rating according to the JEDEC industry standard classifications, and peak solder temperature.

(4) There may be additional marking, which relates to the logo, the lot trace code information, or the environmental category on the device.

(5) Multiple Device Markings will be inside parentheses. Only one Device Marking contained in parentheses and separated by a "~" will appear on a device. If a line is indented then it is a continuation of the previous line and the two combined represent the entire Device Marking for that device.

(6) Lead/Ball Finish - Orderable Devices may have multiple material finish options. Finish options are separated by a vertical ruled line. Lead/Ball Finish values may wrap to two lines if the finish value exceeds the maximum column width.

Important Information and Disclaimer: The information provided on this page represents TI's knowledge and belief as of the date that it is provided. TI bases its knowledge and belief on information provided by third parties, and makes no representation or warranty as to the accuracy of such information. Efforts are underway to better integrate information from third parties. TI has taken and

continues to take reasonable steps to provide representative and accurate information but may not have conducted destructive testing or chemical analysis on incoming materials and chemicals.
TI and TI suppliers consider certain information to be proprietary, and thus CAS numbers and other limited information may not be available for release.

In no event shall TI's liability arising out of such information exceed the total purchase price of the TI part(s) at issue in this document sold by TI to Customer on an annual basis.

TAPE AND REEL INFORMATION

REEL DIMENSIONS

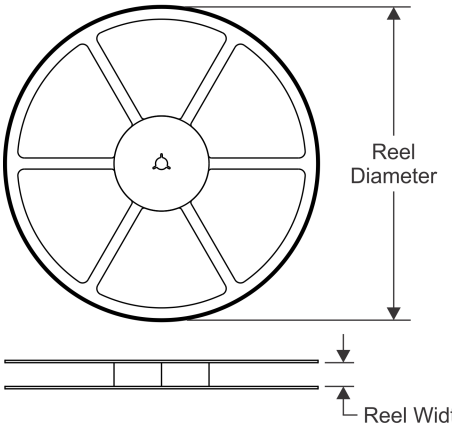

TAPE DIMENSIONS

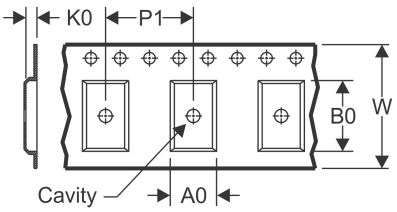

A0	Dimension designed to accommodate the component width
B0	Dimension designed to accommodate the component length
K0	Dimension designed to accommodate the component thickness
W	Overall width of the carrier tape
P1	Pitch between successive cavity centers

QUADRANT ASSIGNMENTS FOR PIN 1 ORIENTATION IN TAPE

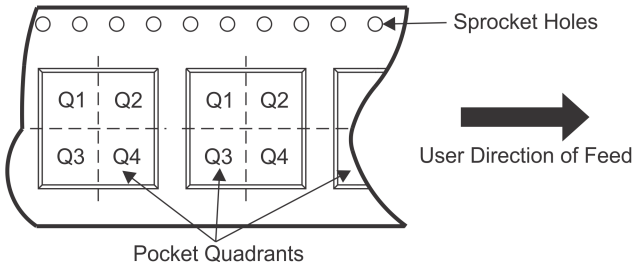

*All dimensions are nominal

Device	Package Type	Package Drawing	Pins	SPQ	Reel Diameter (mm)	Reel Width W1 (mm)	A0 (mm)	B0 (mm)	K0 (mm)	P1 (mm)	W (mm)	Pin1 Quadrant
TAS2770RJQT	VQFN-HR	RJQ	26	250	180.0	12.4	3.8	4.3	1.5	8.0	12.0	Q2
TAS2770YFFR	DSBGA	YFF	30	3000	180.0	8.4	2.13	2.66	0.69	4.0	8.0	Q1
TAS2770YFFT	DSBGA	YFF	30	250	180.0	8.4	2.13	2.66	0.69	4.0	8.0	Q1

TAPE AND REEL BOX DIMENSIONS

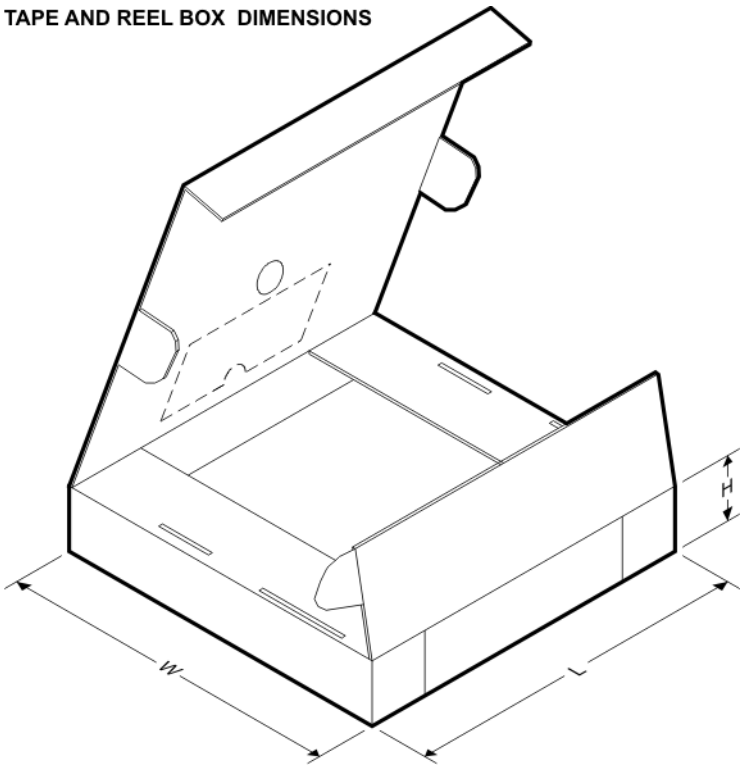

*All dimensions are nominal

Device	Package Type	Package Drawing	Pins	SPQ	Length (mm)	Width (mm)	Height (mm)
TAS2770RJQT	VQFN-HR	RJQ	26	250	210.0	185.0	35.0
TAS2770YFFR	DSBGA	YFF	30	3000	182.0	182.0	20.0
TAS2770YFFT	DSBGA	YFF	30	250	182.0	182.0	20.0

IMPORTANT NOTICE AND DISCLAIMER

TI PROVIDES TECHNICAL AND RELIABILITY DATA (INCLUDING DATASHEETS), DESIGN RESOURCES (INCLUDING REFERENCE DESIGNS), APPLICATION OR OTHER DESIGN ADVICE, WEB TOOLS, SAFETY INFORMATION, AND OTHER RESOURCES “AS IS” AND WITH ALL FAULTS, AND DISCLAIMS ALL WARRANTIES, EXPRESS AND IMPLIED, INCLUDING WITHOUT LIMITATION ANY IMPLIED WARRANTIES OF MERCHANTABILITY, FITNESS FOR A PARTICULAR PURPOSE OR NON-INFRINGEMENT OF THIRD PARTY INTELLECTUAL PROPERTY RIGHTS.

These resources are intended for skilled developers designing with TI products. You are solely responsible for (1) selecting the appropriate TI products for your application, (2) designing, validating and testing your application, and (3) ensuring your application meets applicable standards, and any other safety, security, or other requirements. These resources are subject to change without notice. TI grants you permission to use these resources only for development of an application that uses the TI products described in the resource. Other reproduction and display of these resources is prohibited. No license is granted to any other TI intellectual property right or to any third party intellectual property right. TI disclaims responsibility for, and you will fully indemnify TI and its representatives against, any claims, damages, costs, losses, and liabilities arising out of your use of these resources.

TI’s products are provided subject to TI’s Terms of Sale (www.ti.com/legal/termsofsale.html) or other applicable terms available either on ti.com or provided in conjunction with such TI products. TI’s provision of these resources does not expand or otherwise alter TI’s applicable warranties or warranty disclaimers for TI products.

Mailing Address: Texas Instruments, Post Office Box 655303, Dallas, Texas 75265
Copyright © 2020, Texas Instruments Incorporated