TOSHIBA BIPOLAR LINEAR INTEGRATED CIRCUIT SILICON MONOLITHIC

TA7745P, TA7745F

DC MOTOR DRIVER

FEATURES

- 3 Phase Power Driver.
- Voltage Control System.
- High Efficiency is Obtained.
- Capsealded in Flat Package 16Pin.
- Operating Voltage Range : $V_{CC} = 4.0 \sim 15V$
  $V_S = 2 \sim 15V$
- High Sensitivity of Position Sensing Inputs and Have a Hysteresis : $V_H = 20mV_{p-p}$ (Typ.)
- Output Current : I_O (MAX.) = 1.0A
- Build in Thermal Shut Down Circuit.
- Forward and Reverse Rotation and Stop Modes are Available by Means of Rotation Control Terminal.

TA7745P

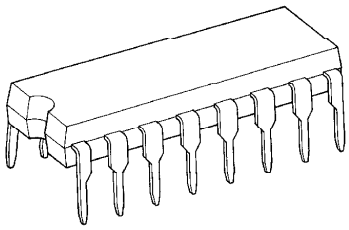

DIP16-P-300-2.54A

TA7745F

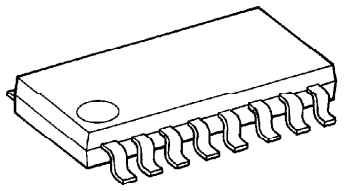

SSOP16-P-225-1.00A

Weight
DIP16-P-300-2.54A : 1.11g (Typ.)
SSOP16-P-225-1.00A : 0.14g (Typ.)

BLOCK DIAGRAM

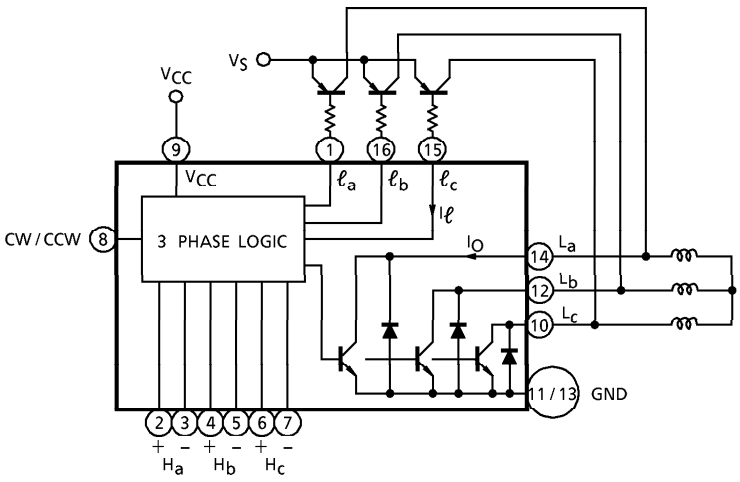

961001EBA2

● TOSHIBA is continually working to improve the quality and the reliability of its products. Nevertheless, semiconductor devices in general can malfunction or fail due to their inherent electrical sensitivity and vulnerability to physical stress. It is the responsibility of the buyer, when utilizing TOSHIBA products, to observe standards of safety, and to avoid situations in which a malfunction or failure of a TOSHIBA product could cause loss of human life, bodily injury or damage to property. In developing your designs, please ensure that TOSHIBA products are used within specified operating ranges as set forth in the most recent products specifications. Also, please keep in mind the precautions and conditions set forth in the TOSHIBA Semiconductor Reliability Handbook.

PIN FUNCTION

PIN No.	SYMBOL	FUNCTIONAL DESCRIPTION
1	ℓ_a	a-phase Pre-drive stage output terminal
2	H_a+	a-phase Hall Amp. positive input terminal
3	H_a-	a-phase Hall Amp. negative input terminal
4	H_b+	b-phase Hall Amp. positive input terminal
5	H_b-	b-phase Hall Amp. negative input terminal
6	H_c+	c-phase Hall Amp. positive input terminal
7	H_c-	c-phase Hall Amp. negative input terminal
8	CW / CCW	Forward rotation / reverse rotation switch terminal
9	V_{CC}	Power Supply input terminal
10	L_c	c-phase drive output terminal
11	GND	GND terminal
12	L_b	b-phase drive output terminal
13	GND	GND terminal
14	L_a	a-phase drive output terminal
15	ℓ_c	c-phase Pre-drive stage output terminal
16	ℓ_b	b-phase Pre-drive stage output terminal

FUNCTION

FRS (⑧PIN)	POSITION SENSING INPUT			COIL OUTPUT		
	H_a	H_b	H_c	L_a	L_b	L_c
V_{RVS}	1	0	1	H	L	M
	1	0	0	H	M	L
	1	1	0	M	H	L
	0	1	0	L	H	M
	0	1	1	L	M	H
	0	0	1	M	L	H
V_{FWD}	1	0	1	L	H	M
	1	0	0	L	M	H
	1	1	0	M	L	H
	0	1	0	H	L	M
	0	1	1	H	M	L
	0	0	1	M	H	L
V_{STOP}	1	0	1	High Impedance		
	1	0	0			
	1	1	0			
	0	1	0			
	0	1	1			
	0	0	1			

961001EBA2'

- The products described in this document are subject to foreign exchange and foreign trade control laws.
- The information contained herein is presented only as a guide for the applications of our products. No responsibility is assumed by TOSHIBA CORPORATION for any infringements of intellectual property or other rights of the third parties which may result from its use. No license is granted by implication or otherwise under any intellectual property or other rights of TOSHIBA CORPORATION or others.
- The information contained herein is subject to change without notice.

MAXIMUM RATINGS (Ta = 25°C)

CHARACTERISTIC		SYMBOL	RATING	UNIT
Supply Voltage		V_{CC}	18	V
		V_S	18	V
Output Current		I_O	1.0	A
		I_ℓ	20.0	mA
Power Dissipation	TA7745P	P_D	350	mW
			550 (Note)	
	TA7745F		1200	
Operating Temperature		T_{opr}	−30~75	°C
Storage Temperature		T_{stg}	−55~150	°C

(Note) This rating is obtained by mounting on 20 × 20 × 0.8mm PCB that occupied above 60% of copper area.

ELECTRICAL CHARACTERISTICS (Unless otherwise specified, Ta = 25°C)

CHARACTERISTIC		SYMBOL	TEST CIR-CUIT	TEST CONDITION	MIN.	TYP.	MAX.	UNIT
Supply Current		I_{CC1}		V_{CC} = 5V, Output "OPEN"	0.5	1	3.0	mA
		I_{CC2}		V_{CC} = 9V, Output "OPEN"	0.6	1.3	3.5	
		I_{CC3}		V_{CC} = 12V, Output "OPEN"	0.7	1.5	5.0	
Saturation Voltage	L_a, L_b, L_c Side	V_{SL-1}		I_O = 0.1A	—	0.12	0.3	V
		V_{SL-2}		I_O = 0.5A	—	0.5	1.0	
	ℓ_a, ℓ_b, ℓ_c Side	V_{SU}		I_ℓ = 1.0mA	—	—	0.2	
Position Sensing Input	Sensitivity	V_H			—	20	—	mV
	Operating DC Level	CMR-H			1	—	$V_{CC-1.5}$	V
Diode Forward Voltage		V_F		I_F = 1A	—	2.0	—	V
Rotation Control Input Voltage	Forward	V_{FWD}		Source current mode	3.9	—	V_{CC}	V
	Stop	V_{STOP}		No current flow (Note)	1.8	—	2.6	
	Reverse	V_{RVS}		Sink current mode	0	—	0.9	
Saturation Voltage Differential (L_a, L_b, L_c Side)		ΔV_S		I_O = 200mA	—	—	50	mV
Leakage Current		I_L		V = 18V	—	—	50	μA

(Note) IC is stop mode when ⑧pin supplied 1.8V~2.6V or open.

TA7745P

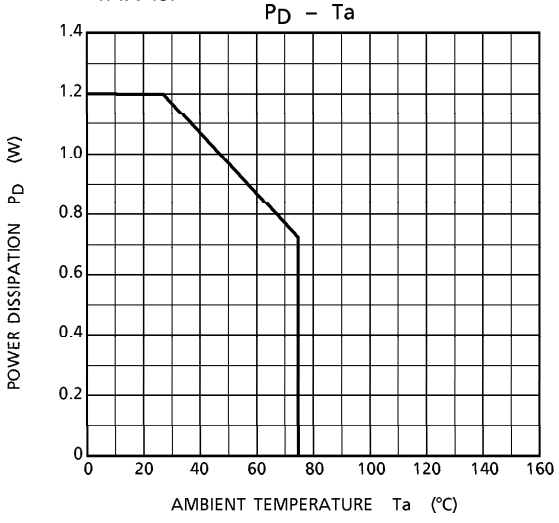

TA7745F

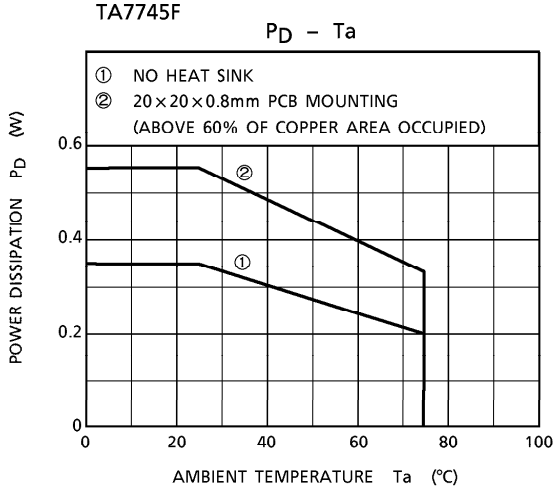

APPLICATION CIRCUIT 1

(3 phase Bi-Pola drive)

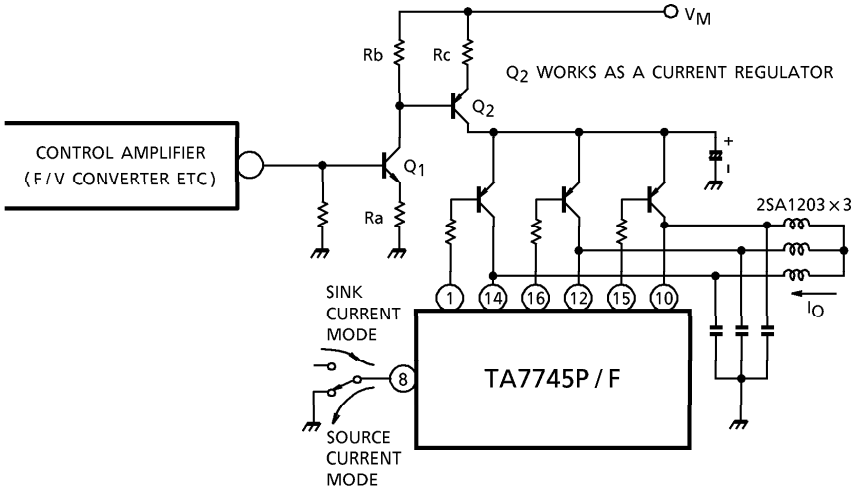

$$I_O \fallingdotseq \frac{Rb}{Ra\,Rc} \cdot V_{IN} - \frac{1}{Rc}\left(\frac{Rb}{Rc}\,V_{BE1} + V_{BE2}\right)$$

$$\fallingdotseq (K_1 \cdot V_{IN}) + K_2$$

$(K_1,\ K_2 = \text{CONSTANT})$

APPLICATION CIRCUIT 2

(3 phase UNI-Pola drive)

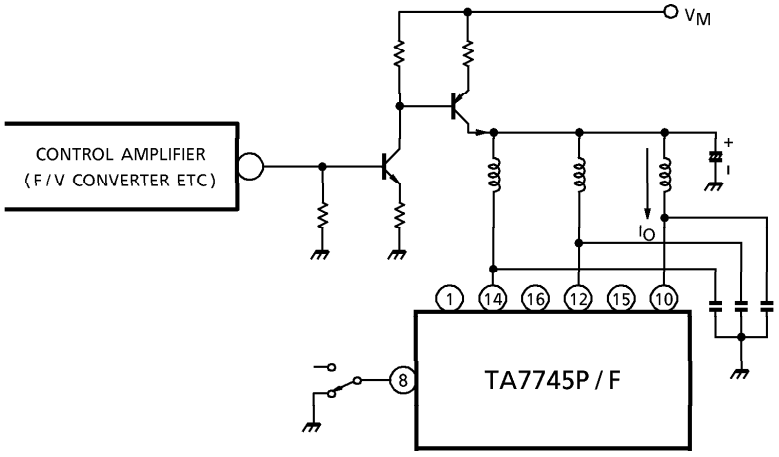

APPLICATION CIRCUIT 3

(High efficiency drive (UNI-Pola))

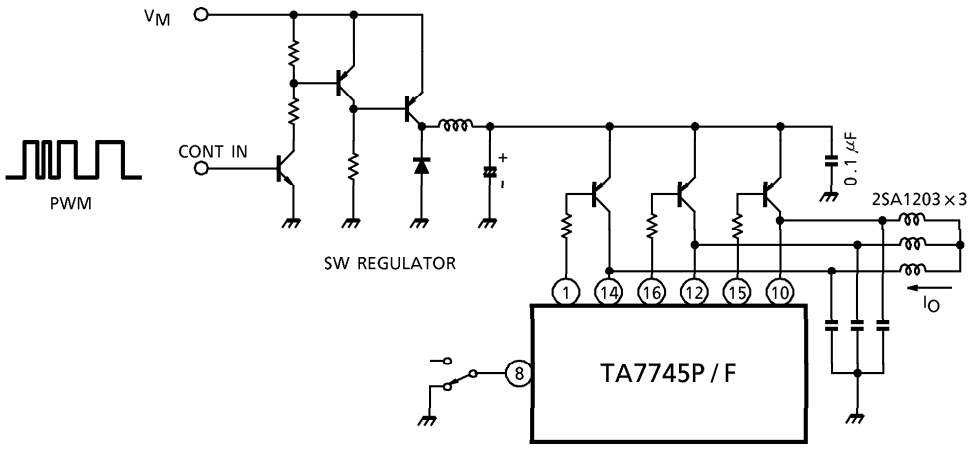

APPLICATION CIRCUIT 4

(High efficiency drive (Bi-Pola))

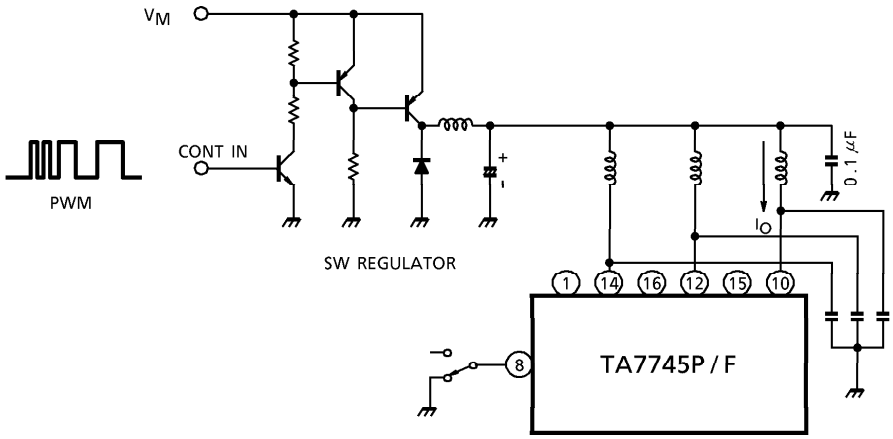

OUTLINE DRAWING

DIP16-P-300-2.54A

Unit : mm

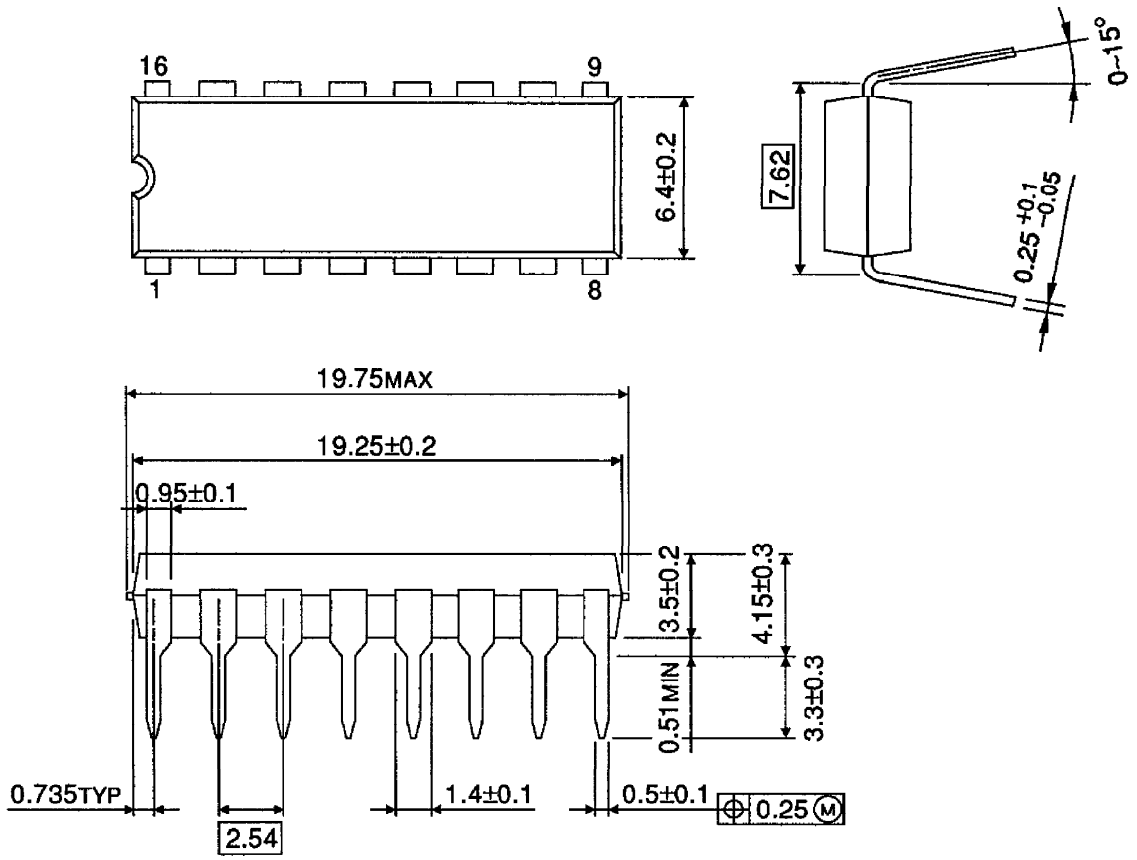

Weight : 1.11g (Typ.)

OUTLINE DRAWING

SSOP16-P-225-1.00A

Unit : mm

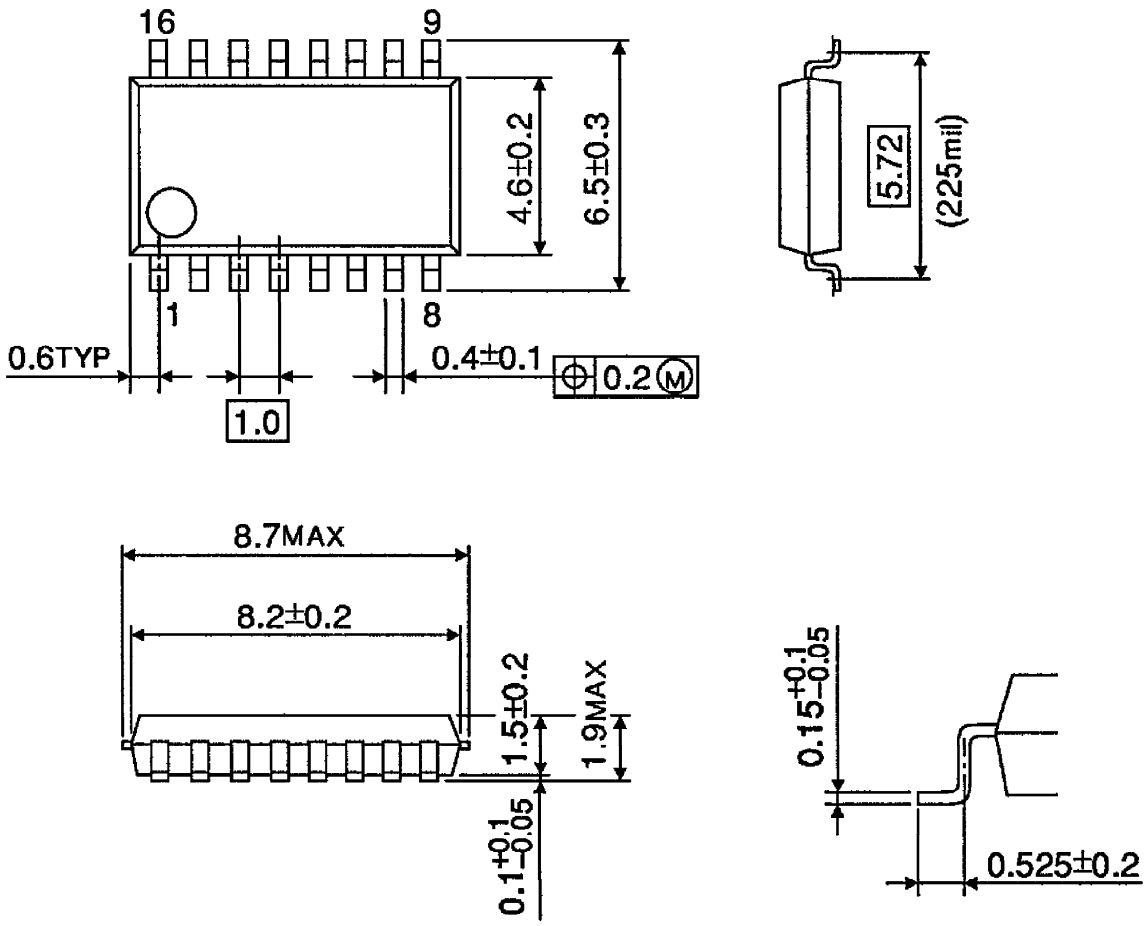

Weight : 0.14g (Typ.)