TA45-3PU

Circuit Breaker for Equipment thermal, 3 pole, Push button actuation, with undervoltage





Thermal circuit breaker
Snap-in or flange mounted
Pushbutton actuation

See below:
Approvals and Compliances

Description

- Thermal circuit breaker
- 2 pole thermal overload protection
- Positively trip-free release
- High configurability
- Snap-in or flange mounted
- Quick connect terminal 6.3 x 0.8 mm or screw clamp terminal M3.5 x 6 mm (lineside P1, P2)

Applications

- Power tools
- Industrial appliances
- Power supplies

Weblinks

pdf data sheet, html datasheet, General Product Information, Distributor-Stock-Check, Detailed request for product, Product News

Technical Data

Rated Voltage AC	AC 400 VAC
Rated current range AC	0.05 - 12 A
Degree of Protection	from front side IP40 acc. to IEC 60529
Dielectric Strength	4 kVAC
Insulation Resistance	500 VDC > 100 MΩ
Lifetime	mechanical: 50'000 switching cycles AC: 1 x Ir: 50'000 switching cycles
Overload	AC: min. 40 trips @ 6 x Ir
Allowable Operation Temp.	-10 °C to 55 °C
Vibration Resistance	± 0.75 mm @ 10 - 60 Hzacc. to IEC 60068-2-6, test Tc10 G @ 60 - 500 Hzacc. to IEC 60068-2-6, test Tc
Shock Resistance	30 G / 18 msacc. to IEC 60068-2-27, test Ea
Possible Tripping Types	Thermal Undervoltage release Remote trip Mechanical lock-out latch
Actuation Type	Pushbutton
Weight	45 - 75 g

Approvals and Compliances

Detailed information on product approvals, code requirements, usage instructions and detailed test conditions can be looked up in Details about Approvals

SCHURTER products are designed for use in industrial environments. They have approvals from independent testing bodies according to national and international standards. Products with specific characteristics and requirements such as required in the automotive sector according to IATF 16949, medical technology according to ISO 13485 or in the aerospace industry can be offered exclusively with customer-specific, individual agreements by SCHURTER.

Approvals

The approval mark is used by the testing authorities to certify compliance with the safety requirements placed on electronic products.

Approval Reference Type: TA45

Approval Logo	Certificates	Certification Body	Description
	VDE Approvals	VDE	VDE Certificate Number: 40019880
	UL Approvals	UL	UL File Number: E71572
	CCC Approvals	CCC	CCC Certificate Number: 2013010307660082

Product standards

Product standards that are referenced

Organization	Design	Standard	Description
IEC	Designed according to	IEC 60934	Circuit-breakers for equipment (CBE)
UL	Designed according to	UL 1077	Standard for Supplementary Protectors for Use in Electrical Equipment
CSA Group	Designed according to	CSA C22.2 No. 235	Supplementary Protectors
CCC	Designed according to	GB 17701	Circuit-breaker for equipment

Application standards

Application standards where the product can be used

Organization	Design	Standard	Description
IEC	Designed for applications acc.	IEC/UL 60950	IEC 60950-1 includes the basic requirements for the safety of information technology equipment.

Compliances

The product complies with following Guide Lines

Identification	Details	Initiator	Description
CE	CE declaration of conformity	SCHURTER AG	The CE marking declares that the product complies with the applicable requirements laid down in the harmonisation of Community legislation on its affixing in accordance with EU Regulation 765/2008.
RoHS COMPLIANT	RoHS	SCHURTER AG	Directive RoHS 2011/65/EU, Amendment (EU) 2015/836
China RoHS	China RoHS	SCHURTER AG	The law SJ / T 11363-2006 (China RoHS) has been in force since 1 March 2007. It is similar to the EU directive RoHS.
REACH	REACH	SCHURTER AG	On 1 June 2007, Regulation (EC) No 1907/2006 on the Registration, Evaluation, Authorization and Restriction of Chemicals 1 (abbreviated as "REACH") entered into force.

Dimension [mm]

Snap-in type and quick connect terminal
Undervoltage release, remote trip release

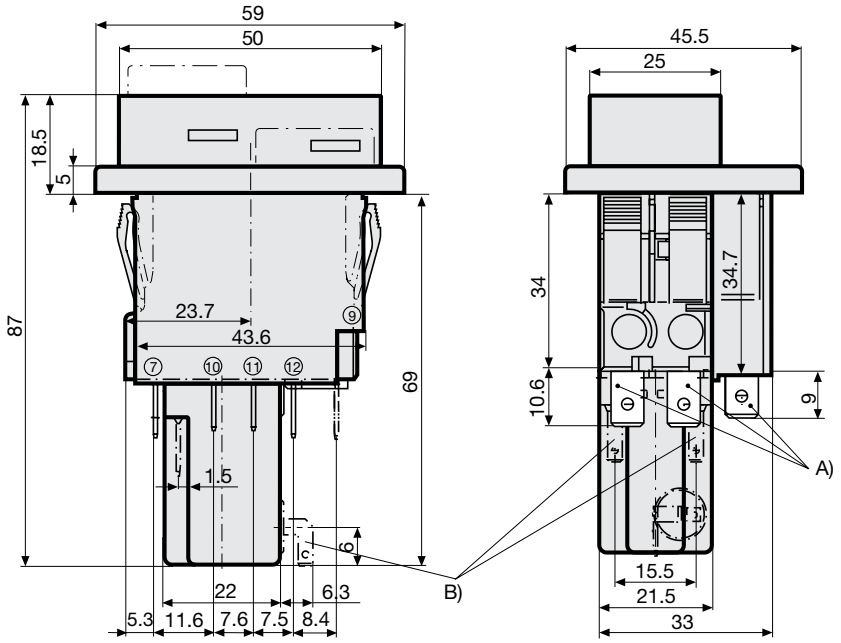

A) Quick connect terminal, IEC 61210, A6.3-0.8 mm
B) Quick connect terminal, IEC 61210, A2.8-0.8 mm

Flange type and quick connect terminal
Undervoltage release, remote trip release

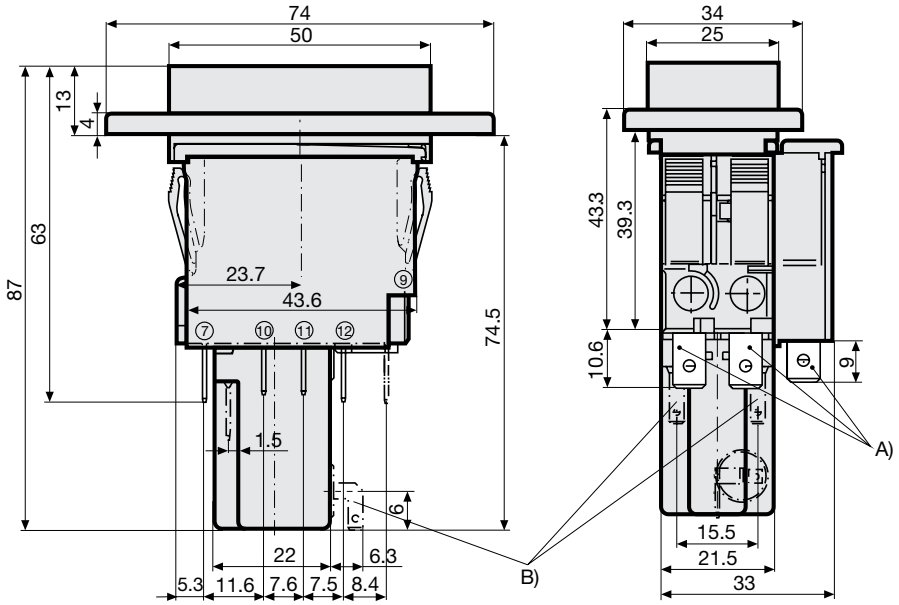

A) Quick connect terminal, IEC 61210, A6.3-0.8 mm
B) Screw type M3, 5x6 (Philips Form H),
maximum torque 1 Nm

Cut-out and pin-out

Cut-out snap-in type

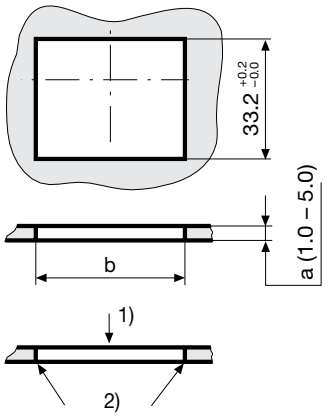

a	b
1.0	44,5...45,0
1.5	44,5...45,0
2.0	44,7...45,2
2.5	44,7...45,2
3.0	44,8...45,3
4.0	44,9...45,4
5.0	45,0...45,5

Cut-out flange type / Installation from rear

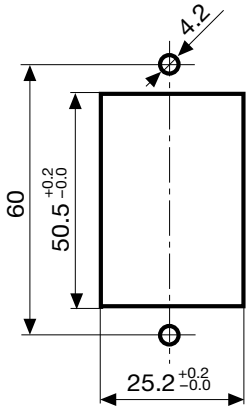

1) Assemble
2) edge must be sharp

Cut-out flange type/ Installation from rear with AZZ05 cover

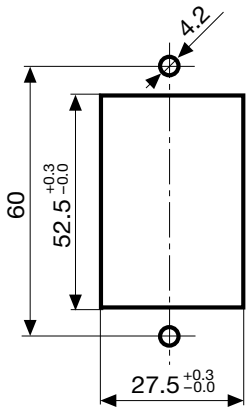

Pin-out

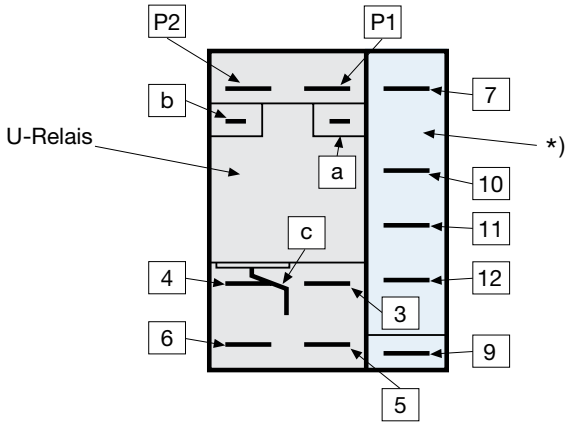

*) Auxiliary contact / 3 pole

Diagrams

2 pole thermal overload protection

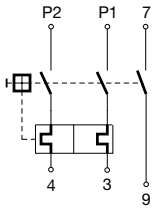

2 pole thermal overload protection, Shunt terminal

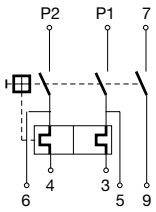

Time-Current-Curves

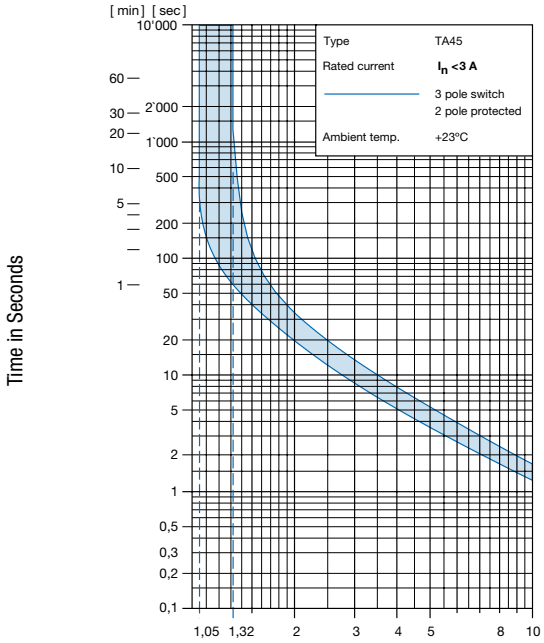

Reference Temperature +23°

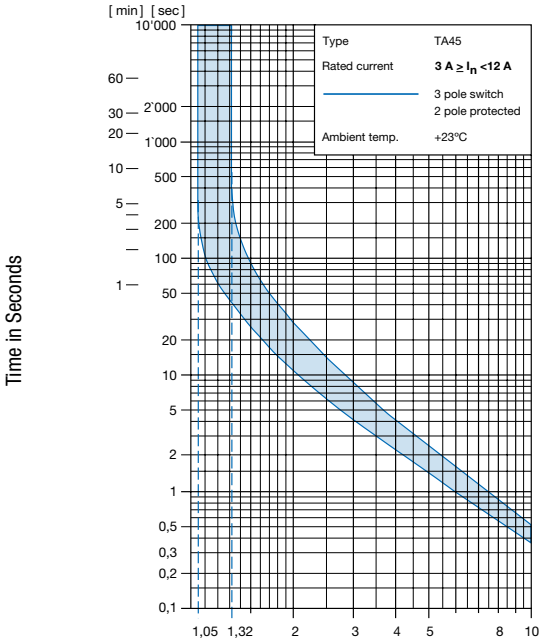

Reference Temperature +23°

Effect of ambient temperature

The units are calibrated for an ambient temperature of +23°C. To determine the rated current for a lower or higher ambient temperature, use a correction factor (typical value) from the table below:

Ambient Temperature [°C]	Correction factor
-10	0.89
-5	0.91
0	0.92
+23	1.00
+30	1.03
+40	1.08
+55	1.16

Example: Rated current = 5 A, Environmental temperature = 40 °C, --> Correction factor = 1.08, Resulting current = 5.5 A --> Fount to next higher rated current: 6 A

Undervoltage release

Max. operating voltage							1.1 Ue
Rated operating voltage Ue	5 V	12 V	24 V	48 V	120 V	240 V	400 V [1)]
Current consumption (± 10%)	10.5 mA	16.5 mA	17.0 mA	3.2 mA	3.7 mA	3.1 mA	2.65 mA
Highest reset level							0.85 Ue
Lowest trip level							0.20 Ue
Trip delay							20 ms - 50 ms
Impulse withstand voltage (1.2 / 50 µs)							≥4 kV

1) only for 3pole

Remote trip

Permissible impuls duration of the make contact (no)	Between terminal C and P1	unlimited
Electrical load of the make contact (no)	Current max. 12 mA / power max. 1.1 W	

Config. Code

TA45 - AK2 W F 120 A2 - AZM11

The characters are placeholders for the correspondingly keys of selections from the key tables.

TA45 - **AK2** W F 120 A2 - AZM11 = Basic function

Basic function	Configuration key
3-pole, push button, 2pole overload protection, quick connect terminal, flange type, push button gasket IP40	AKN
3-pole, push button, 2p overload protection, shunt terminal, quick connect terminal, flange type, push button gasket IP40	AKP
3-pole, push button, 2pole overload protection, quick connect terminal, flange type, push button gasket IP65	AKW
3-pole, push button, 2p overload protection, shunt terminal, quick connect terminal, flange type, push button gasket IP65	AKX
3-pole, push button, 2pole overload protection, screw connection, flange type, push button gasket IP40	ANN
3-pole, push button, 2p overload protection, shunt terminal, screw connection, flange type, push button gasket IP40	ANP
3-pole, push button, 2pole overload protection, screw connection, flange type, push button gasket IP65	ANW
3-pole, push button, 2p overload protection, shunt terminal, screw connection, flange type, push button gasket IP65	ANX
3-pole, push button, 2pole overload protection, quick connect terminal, snap-in type, push button gasket IP40	ATN
3-pole, push button, 2p overload protection, shunt terminal, quick connect terminal, snap-in type, push button gasket IP40	ATP
3-pole, push button, 2pole overload protection, quick connect terminal, snap-in type, push button gasket IP65	ATW
3-pole, push button, 2p overload protection, shunt terminal, quick connect terminal, snap-in type, push button gasket IP65	ATX
3-pole, push button, 2pole overload protection, screw connection, snap-in type, push button gasket IP40	AWN
3-pole, push button, 2p overload protection, shunt terminal, screw connection, snap-in type, push button gasket IP40	AWP
3-pole, push button, 2pole overload protection, screw connection, snap-in type, push button gasket IP65	AWW
3-pole, push button, 2p overload protection, shunt terminal, screw connection, snap-in type, push button gasket IP65	AWX

TA45 - AK2 **W** F 120 A2 - AZM11 = Actuator colour

Actuator colour	Configuration key
Front Black: Green/Red	T
Front Yellow: Green/Red	U
Front Grey: Green/Red	V

TA45 - AK2 W **F** 120 A2 - AZM11 = Legend

Legend		Configuration key
embossed	– 0	F
white printed	ON OFF	H
black printed	ON OFF	K
white printed	– 0	L
black printed	– 0	M
white printed	I 0	P
black printed	I 0	R
white printed	ON I 0 OFF	S
black printed	ON I 0 OFF	T

TA45 - AK2 W F **120** A2 - AZM11 = Rated current

Rated current	Configuration key
0.05 A	Z05
0.1 A	J01
0.2 A	J02
0.3 A	J03
0.4 A	J04
0.5 A	J05
0.6 A	J06
0.7 A	J07
0.8 A	J08
0.9 A	J09
1.0 A	J10
1.1 A	J11
1.2 A	J12
1.3 A	J13
1.4 A	J14
1.5 A	J15
1.6 A	J16
1.7 A	J17
1.8 A	J18
1.9 A	J19
2.0 A	J20
2.1 A	J21
2.2 A	J22
2.3 A	J23
2.5 A	J25
2.8 A	J28
3.0 A	030
3.5 A	035
4.0 A	040
4.5 A	045
5.0 A	050

Other rated currents on request

* The approved current range is 0.05 to 12 A. We recommend to limit the range to max. 8 A at AC 400 V.
For the current range 9 to 12 A the voltage should be limited to AC 240 V.

Rated current	Configuration key
6.0 A	060
6.5 A	065
7.0 A	070
7.5 A	075
8.0 A	080
9.0 A*	090
10.0 A*	100
11.0 A*	110
12.0 A*	120

Other rated currents on request

* The approved current range is 0.05 to 12 A. We recommend to limit the range to max. 8 A at AC 400 V.
For the current range 9 to 12 A the voltage should be limited to AC 240 V.

TA45 - AK2 W F 120 **A2** - AZM11 = Release / lock-out latch

Release / lock-out latch	Configuration key
Remote trip release, rated voltage 400 V AC	A1
whithout release / lock-out latch	C0
Undervoltage release with additional contact, rated voltage 400 V AC	E1

Release / lock-out latch	Configuration key
Undervoltage release with additional contact, rated voltage 240 V AC	E2
Undervoltage release with additional contact, rated voltage 230 V AC	E3
Undervoltage release, rated voltage 400 V AC	U1
Undervoltage release with 2 additional contacts, rated voltage 400 V AC	Z1
Undervoltage release with 2 additional contacts, rated voltage 240 V AC	Z2
Undervoltage release with 2 additional contacts, rated voltage 230 V AC	Z3
Undervoltage release with 2 additional contacts, rated voltage 120 V AC	Z4
Undervoltage release with 2 additional contacts, rated voltage 48 V AC / DC	Z6
Undervoltage release with 2 additional contacts, rated voltage 24 V AC / DC	Z7
Undervoltage release with 2 additional contacts, rated voltage 12 V AC / DC	Z8
Undervoltage release with 2 additional contacts, rated voltage 5 V AC / DC	Z9

TA45 - AK2 W F 120 A2 - **AZM11** = Accessories

Factory mounted accessories	Configuration key
Without cover	

For subsequent fitting accessories see:

https://www.schurter.com/pdf/english/typ_TA45-ACC.pdf

Variants

Thermal overload protection	Addition	connection type	Mounting	IP Protection Class Front Side	Actuator colour	Legend	Rated current	Accessories	Config. Code	Order Number
2-pole		Quick connect terminal	Snap-in type	IP65	Front Black: Green/Red	embossed	7.0 A	Without cover	TA45-ATWTF070E1	4430.3364
2-pole		Quick connect terminal	Flange type	IP65	Front Black: Green/Red	embossed	5.0 A	Without cover	TA45-AKWTF050U1	4430.3818

Availability for all products can be searched real-time:https://www.schurter.com/en/Stock-Check/Stock-Check-SCHURTER

Packaging Unit 1 Pcs

Accessories

	Description
	TA45-ACC Accessories to TA45

18.07.2019

The specifications, descriptions and illustrations indicated in this document are based on current information. All content is subject to modifications and amendments. Information furnished is believed to be accurate and reliable. However, users should independently evaluate the suitability and test each product selected for their own applications.