TOSHIBA BIPOLAR LINEAR INTEGRATED CIRCUIT SILICON MONOLITHIC

TA4301F

DOWN CONVERTER FOR BS TUNER IC

FEATURES

- Wide band operation (~1.6GHz)
- Operating supply voltage V_{CC} = 5V
- OSC output pin and connect with PLL IC
- SSOP 20 pin small package

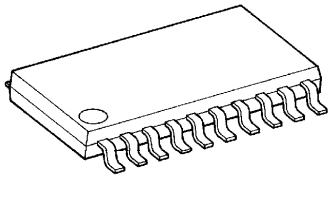

SSOP20-P-225-1.00

Weight : 0.17g (Typ.)

PIN CONNECTION FUNCTION BLOCK DIAGRAM

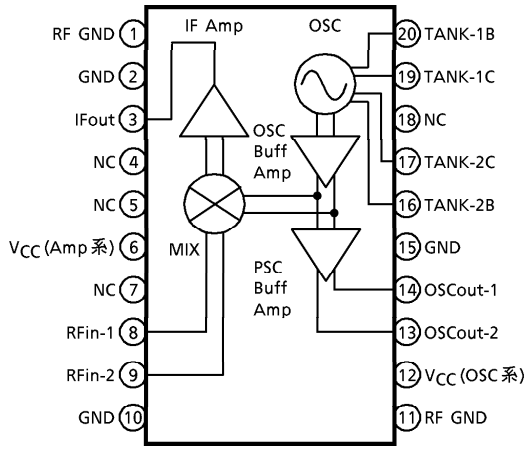

MARKING

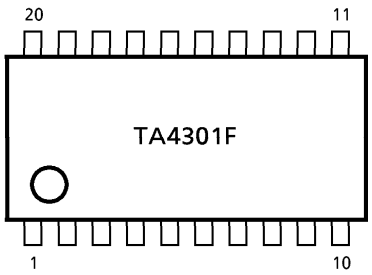

980508EBA1

- TOSHIBA is continually working to improve the quality and the reliability of its products. Nevertheless, semiconductor devices in general can malfunction or fail due to their inherent electrical sensitivity and vulnerability to physical stress. It is the responsibility of the buyer, when utilizing TOSHIBA products, to observe standards of safety, and to avoid situations in which a malfunction or failure of a TOSHIBA product could cause loss of human life, bodily injury or damage to property. In developing your designs, please ensure that TOSHIBA products are used within specified operating ranges as set forth in the most recent products specifications. Also, please keep in mind the precautions and conditions set forth in the TOSHIBA Semiconductor Reliability Handbook.
- The products described in this document are subject to foreign exchange and foreign trade laws.
- The information contained herein is presented only as a guide for the applications of our products. No responsibility is assumed by TOSHIBA CORPORATION for any infringements of intellectual property or other rights of the third parties which may result from its use. No license is granted by implication or otherwise under any intellectual property or other rights of TOSHIBA CORPORATION or others.
- The information contained herein is subject to change without notice.

EXPLANATION

PIN No.	PIN NAME	PIN VOLTAGE	EXPLANATION	EQUIVALENT CIRCUIT
1	RF GND	0	GND Pin for OSC, OSC Buff Amp, PSC Buff Amp	—
2	GND	0	GND Pin for IF Amp, MIX	—
3	IFout	2.25	IF Output PIN	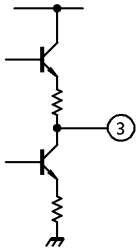
4	NC	—	—	—
5	NC	—	—	—
6	V_{CC} (Amp)	5.0	Supply Voltage for MIX, IF Amp	—
7	NC	—	—	—
8	RFin-1	1.74	RF Input Pin	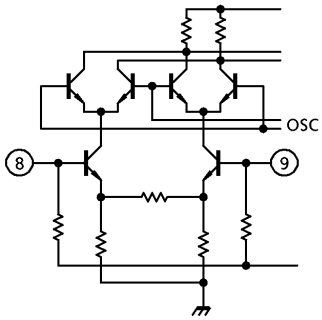
9	RFin-2	1.74		
10	GND	0	GND Pin for IF Amp, MIX	—
11	RF GND	0	GND Pin for PSC Buff Amp	—
12	V_{CC} (OSC)	4.35	Supply Voltage Pin for OSC, OSC Buff Amp, PSC Buff Amp, Req.	—
13	OSCout-2	1.36	OSC Output Pin 2	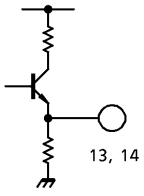
14	OSCout-1	1.36	OSC Output Pin 1	
15	GND	0	GND Pin for OSC, OSC Buff Amp, PSC Buff Amp, Req.	—

PIN No.	PIN NAME	PIN VOLTAGE	EXPLANATION	EQUIVALENT CIRCUIT
16	TANK-2B	1.4	Base Pin for OSC	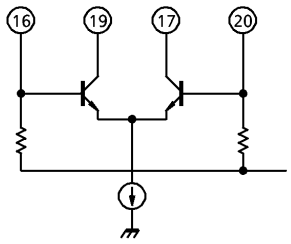
17	TANK-2C	3.28	Collector Pin for OSC	
18	NC	—	—	
19	TANK-1C	3.28	Collector Pin for OSC	
20	TANK-1B	1.4	Base Pin for OSC	

MAXIMAM RATINGS (Ta = 25°C)

CHARACTERISTIC		SYMBOL	RATING	UNIT
Supply Voltage	For Amp	V_{CC} (Amp)	6	V
	For OSC	V_{CC} (OSC)	5.5	
Total Power Dissipation		P_D (Note)	1100	mW
Operating Temperature		T_{opr}	−20~85	°C
Storage Temperature		T_{stg}	−45~150	°C

(Note) 100cm^2 × 1.6t (Cu layer area : 36%) on glass epoxy resins.

RECOMMENDED OPERATING RANGE

CHARACTERISTIC	SYMBOL	VALUE	UNIT
Supply Voltage	V_{CC} (Amp)	4.5~5.5	V
Supply Voltage	V_{CC} (OSC)	4.2~5.0	V
Input Frequency Range	fin	900~1600	MHz
IF Input Frequency Range	fIF	350~550	MHz

ELECTRIC CHARACTERISTICS (Ta = 25°C)

CHARACTERISTIC	SYMBOL	TEST CIR-CUIT	TEST CONDITION	MIN.	TYP.	MAX.	UNIT
Supply Current	I_{CC} (Amp)	1	V_{CC} = 5V, No RF input	29	32	41	mA
Supply Current	I_{CC} (OSC)	1	V_{CC} = 4.35V, No RF input	29	36	45	mA
C. Gain	Gc	1	fin = 1.6GHz, fIF = 400MHz	14	21	25	dB
Noise Figure	NF	1	fin = 1.6GHz, fIF = 400MHz	—	18	22	dB
Po (sat)	Po (sat)	1	fin = 1.6GHz, fIF = 400MHz	5	10	—	dBmW
IP3	IP3	1	fin = 1.596GHz, 1.6GHz fIF = 400MHz, 404MHz	12	17	24	dBmW
Posc	Posc	1	fLO = 1.6GHz	—	−4	—	dBmW

(Note) All electrical characteristics measured in Supply Voltage 5.0V / Amp, 4.35V / OSC.

(Reference characteristic)

CHARACTERISTIC	TEST CONDITION	TYP.	UNIT
Rfin-LO Leak Level	fLO = 1.3GHz	−45	dBmW
Ifout-LO Leak Level	fLO = 1.3GHz	−20	dBmW
Input Returen Loss	fin = 1.6GHz	−4.5	dB
Output Return Loss	fLO = 1.3GHz	−5.0	dB

(Note) All electrical characteristics measured in Supply Voltage 5.0V / Amp, 4.35V / OSC.

TEST CIRCUIT 1

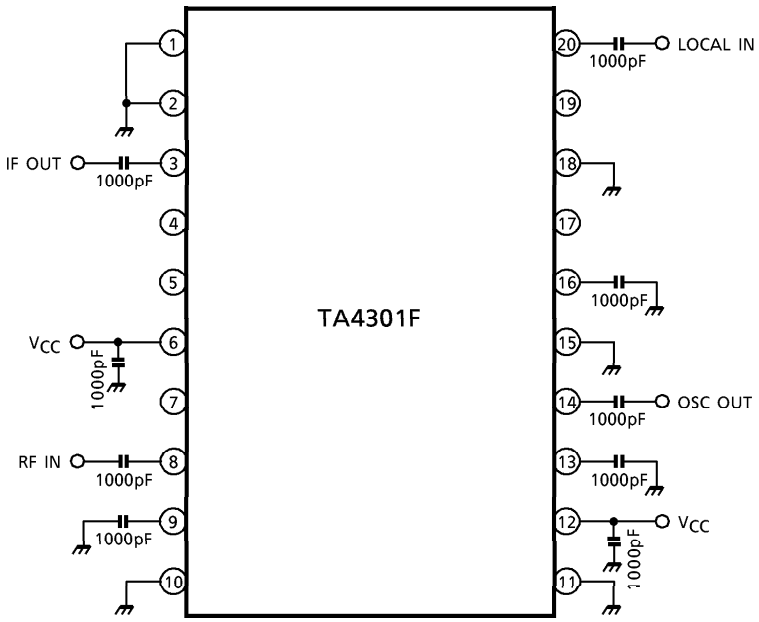

C. Gain – f

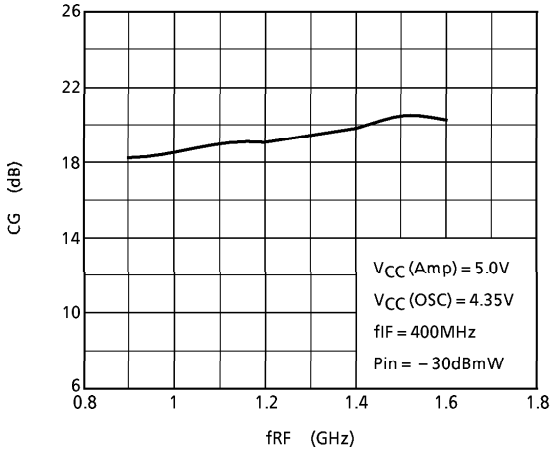

NF – f

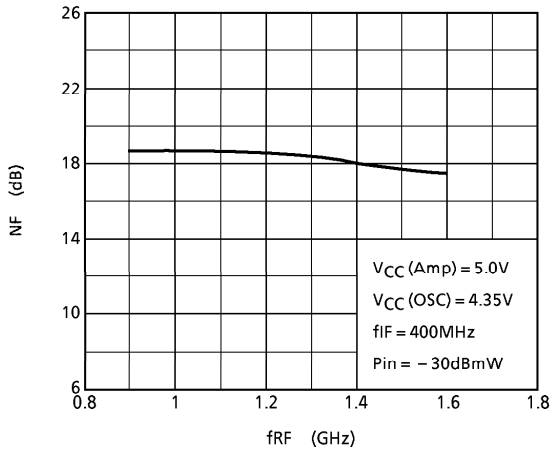

Pin – Pout

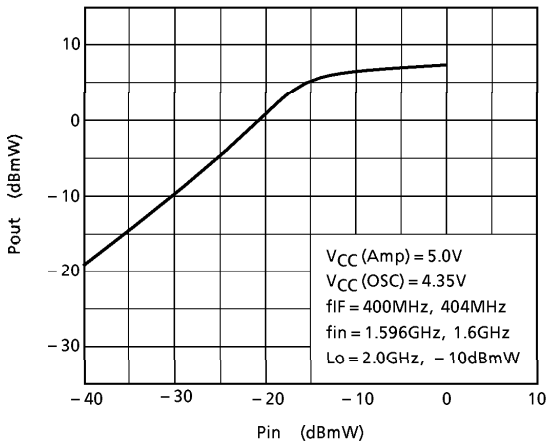

VCOout – f

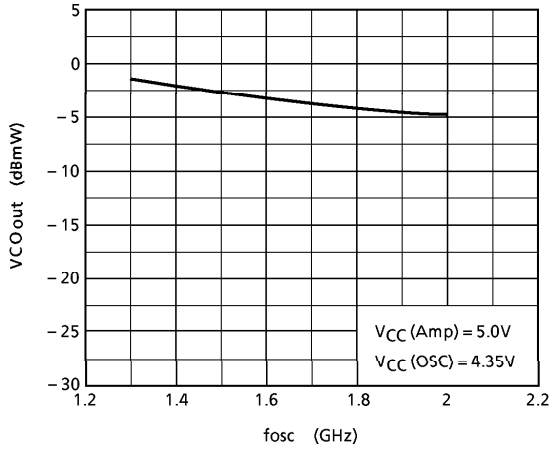

Pin, IM3 – Pout

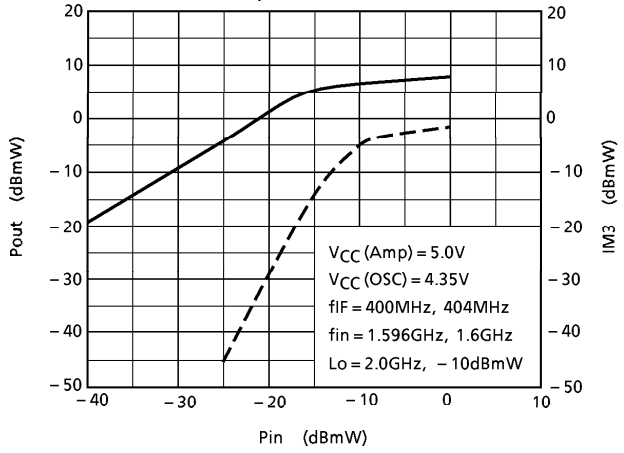

APPLICATION CIRCUIT

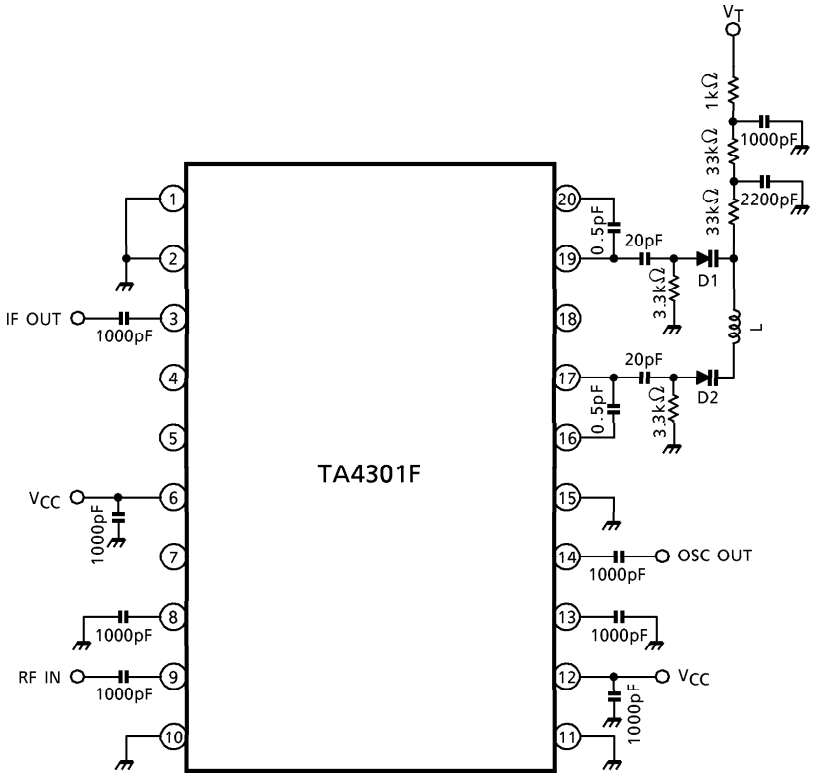

D1, D2 : 1SV245
L : COIL 0.3d, ϕ2.0, 1.5T (10nH)

OUTLINE DRAWING

SSOP20-P-225-1.00

Unit : mm

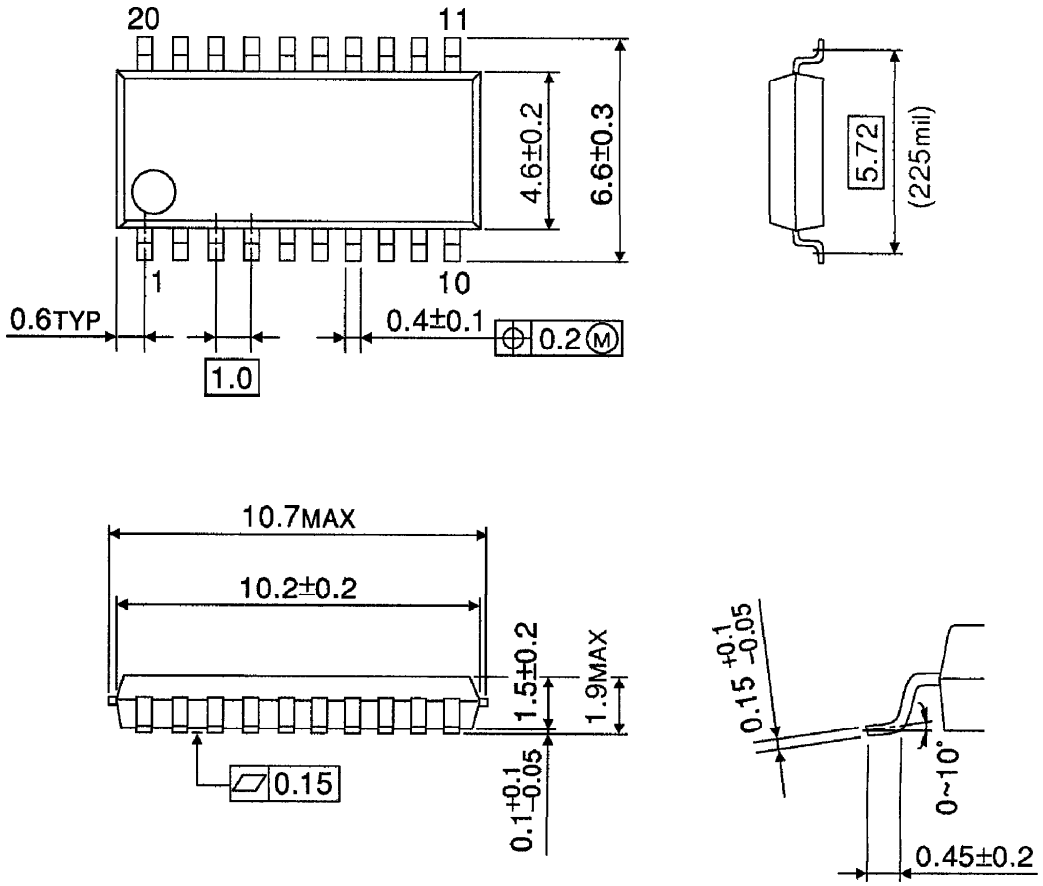

Weight : 0.17g (Typ.)