COMPANDER IC FOR CORDLESS TELEPHONE

FEATURES

- Low operating supply voltage and small consumption current make this IC suitable for its application to the sets using the battery such as the codeless telephone set. etc.
  V_{CC} (MIN) = 1.8V (Ta = 25°C)
  I_{CCQ} = 2.7mA (Typ.) (V_{CC} = 3V, Ta = 25°C)
- For noise reduction, compressor and expander are incorporated into a package.
- Wide operating supply voltage range : V_{CC} = 1.8~9V
- Recommendable operating supply voltage : V_{CC} = 3V
- Difference between TA31101P, TA31101F and TA31101AP, TA31101AF

NAME OF PRODUCT	INPUT REFERENCE LEVEL (Typ.)
TA31101P, TA31101F	−18.5dBV
TA31101AP, TA31101AF	−20.0dBV

TA31101P
TA31101AP

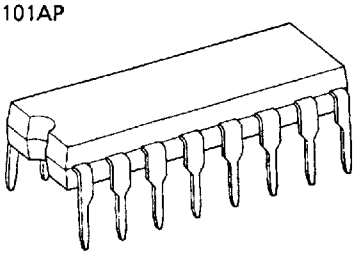

DIP16-P-300A

TA31101F
TA31101AF

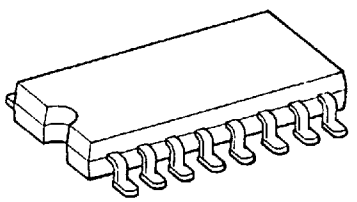

SSOP16-P-225

Weight DIP16-P-300A : 1.1g (Typ.)
SSOP16-P-225 : 0.14g (Typ.)

BLOCK DIAGRAM

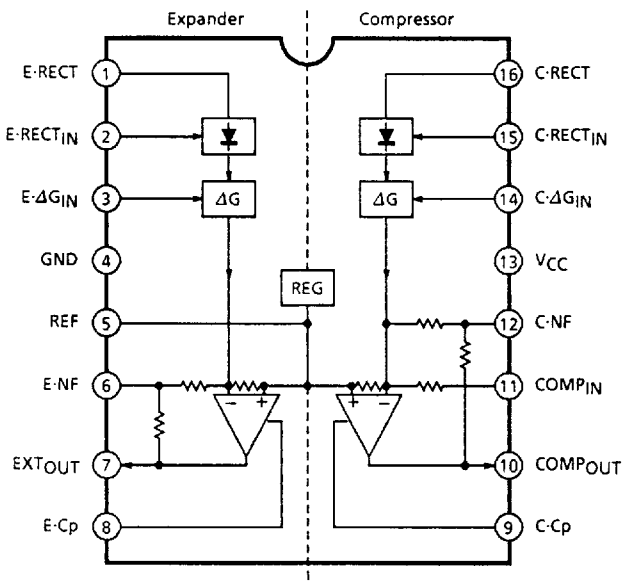

© The information contained herein is presented only as a guide for the applications of our products. No responsibility is assumed by TOSHIBA CORPORATION for any infringements of intellectual property or other rights of the third parties which may result from its use. No license is granted by implication or otherwise under any intellectual property or other rights of TOSHIBA CORPORATION or others.
© These TOSHIBA products are intended for use in general commercial applications (office equipment, communication equipment, measuring equipment, domestic appliances, etc.). please make sure that you consult with us before you use these TOSHIBA products in equipment which requires extraordinarily high quality and/or reliability, and in equipment which may involve life threatening or critical application, including but not limited to such uses as atomic energy control, airplane or spaceship instrumentation, traffic signals, medical instrumentation, combustion control, all types of safety devices, etc. TOSHIBA cannot accept and hereby disclaims liability for any damage which may occur in case the TOSHIBA products are used in such equipment or applications without prior consultation with TOSHIBA.

9097247 0019695 9T1

The compressor and the expander of this IC are individually composed of the rectification circuit, the gain cell and the operation amplification circuit as shown in the figure below.

Compressor

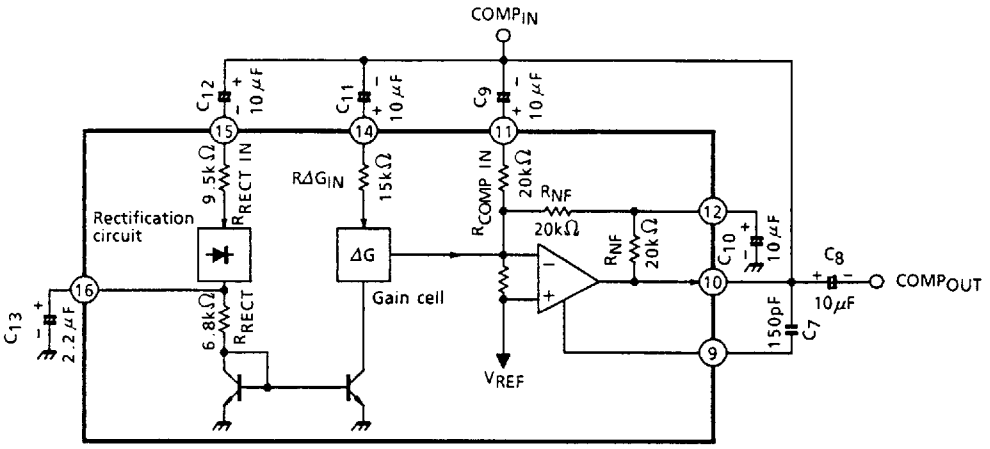

Expander

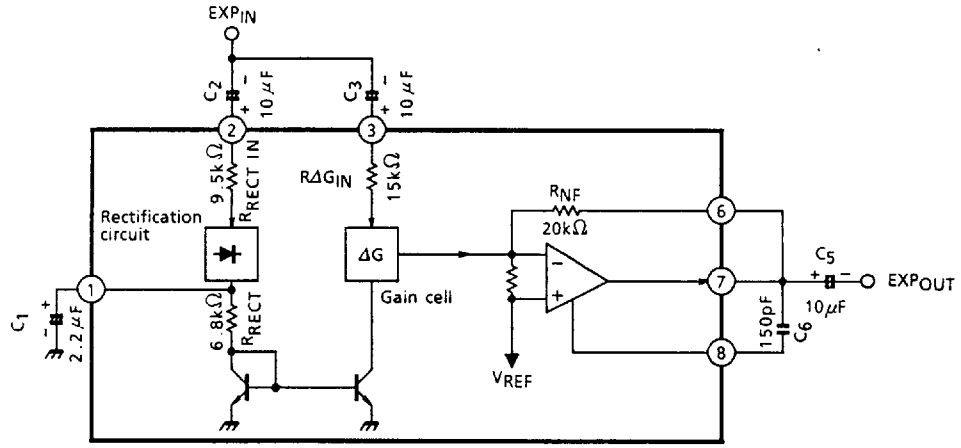

1. Rectification circuit

In this circuit, the feedback-type full-wave rectification circuit is applied for improving the precision of detection, and the response characteristics (attack time, recovery time) are determined by the time constant of the smoothing capacitor of the rectifying output current connected to the E·RECT terminal and the C·RECT terminal (pin 1, pin 16) and by the time constant of the internal resistance of IC.

9097247 0019696 838

- The internal resistance of E·RECT terminal and C·RECT terminal (pin 1, pin 16) becomes the series resistance of the R·RECT 6.8Ω and the emitter resistance re in the current miller circuit. The emitter resistance re of transistor varies according to the signal level as shown below.

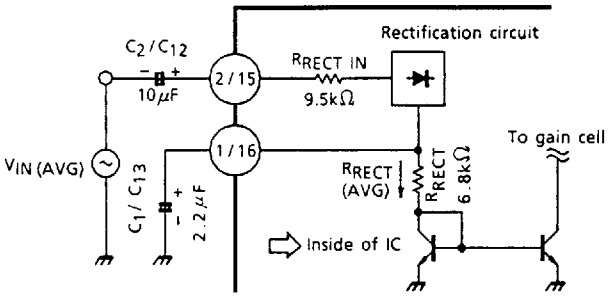

$$3 \cdot \frac{V_{IN\,(AVG)}}{R_{RECT\ IN}} = I_{RECT\,(AVG)}$$

$$re = \frac{V_T}{I_{RECT\,(AVG)}} (\Omega)$$

$V_{IN\,(AVG)}$: Mean input signal voltage
$I_{RECT\,(AVG)}$: Mean rectification output
re : Emitter resistance
V_T : Approx. 26mV (At room temperature)

- The input resistance of the input E·$RECT_{IN}$ terminal and C·$RECT_{IN}$ terminal (pin 2, pin 15) of the rectification circuit is approximately 9.5kΩ.

2. Gain cell (ΔG)

This circuit is a variable gain amplifier for controlling the gain with the rectification output current of the rectification circuit.
The input resistance of the input E·ΔG_{IN} terminal and C·ΔG_{IN} terminal of the gain cell (pin 3, pin 14) is approximately 15kΩ.

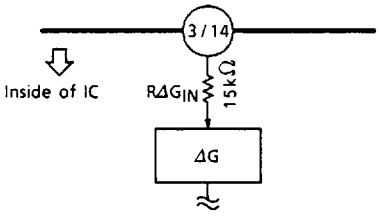

3. Operation amplification circuit

In the compressor, since the variable gain amplifier is involved in the feedback loop of the operation amplification circuit, the oscillation is liable to be generated, however, in this circuit, since the C·Cp terminal (pin 9) for phase compensation is provided, the countermeasure can be taken against the oscillation through the external capacitor.
In the compressor, for making the current gain maximum, the capacitor for decoupling the current signal is connected to the C·NF terminal (pin 12).
The cut-off frequency of the compressor is determined by the product of the capacitor C_{10} connected to the C·NF terminal multiplied by R_{NF} 20kΩ of the internal resistance.
The cut-off frequency is obtained by the expression below.

$$f_C = \frac{1}{2\pi \cdot C_{10} \cdot R_{NF}}$$

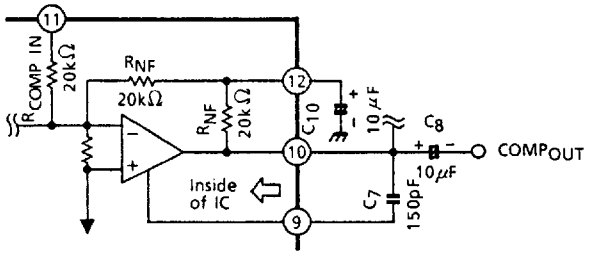

9097247 0019697 774

MAXIMUM RATINGS (Ta = 25°C)

CHARACTERISTIC		SYMBOL	RATING	UNIT
Supply Voltage		V_{CC}	10	V
Power Dissipation	P type	P_D	1000	mW
	F type		370	
Operating Temperature		T_{opr}	−25~75	°C
Storage Temperature		T_{stg}	−55~150	°C

ELECTRICAL CHARACTERISTICS (Unless otherwise specified, V_{CC} = 3V, f = 1kHz, Ta = 25°C, 0dB = −20dBV)

CHARACTERISTIC		SYMBOL	TEST CIR-CUIT	TEST CONDITION	MIN.	TYP.	MAX.	UNIT
Supply Voltage		V_{CC}	—	—	1.8	3.0	9.0	V
Quiescent Current		I_{CCQ}	1	V_{CC} = 3.0V	—	2.7	5.0	mA
Input Reference Level	TA31101P TA31101F	V_{REF}	2	$V_{IN} = V_{OUT}$	−20.0	−18.5	−17.0	dBV
	TA31101AP TA31101AF				−21.5	−20.0	−18.5	
Total Harmonic Distortion	COMP	THD_C	3	V_{IN} = 0dB	—	−55	−46	dB
	EXP	THD_E			—	−55	−46	
Output Noise Voltage	COMP	V_{NOC}	4	$V_{IN} = -\infty$, f = 15Hz~20kHz	—	0.5	—	mV_{rms}
	EXP	V_{NOE}			—	15	—	μV_{rms}
Cross Talk	C→E	CT (C→E)	5	V_{IN} = 0dBV	—	−95	—	dBV
	E→C	CT (E→C)	6	V_{IN} = −12dBV	—	−55	—	
Ripple Rejection Ratio	COMP	RR_C	7	$V_R = 100mV_{rms}$, f = 1kHz	—	−30	—	dB
	EXP	RR_E			—	−60	—	
Maximum Output Voltage (EXP)		V_{OM}	8	$R_L = 10k\Omega$	—	800	—	mV_{rms}
Output Deviation (Note 1)	COMP	V_{OC1}	9	V_{IN} = 20dB	−0.4	0.1	0.6	dB
		V_{OC2}		V_{IN} = −20dB	−0.5	0	0.5	
		V_{OC3}		V_{IN} = −40dB	−0.6	−0.1	0.4	
	EXP	V_{OE1}	9	V_{IN} = 6.5dB	−1.1	−0.1	0.9	
		V_{OE2}		V_{IN} = −10dB	−0.9	0.1	1.1	
		V_{OE3}		V_{IN} = −25dB	−1.0	0	1.0	
Frequency Characteristic	COMP	FR_C	10	V_{IN} = 0dB, f = 200~3500Hz and f = 1kHz are references.	—	±0.1	—	dB
	EXP	FR_E			—	±0.1	—	

Note 1 : Output deviation = $(V_{OUT} - V_{REF}) - V_{IN} \times \alpha\beta$
$\alpha\beta$: (COMP = 0.5, EXP = 2)

9097247 0019698 600

TEST CIRCUIT

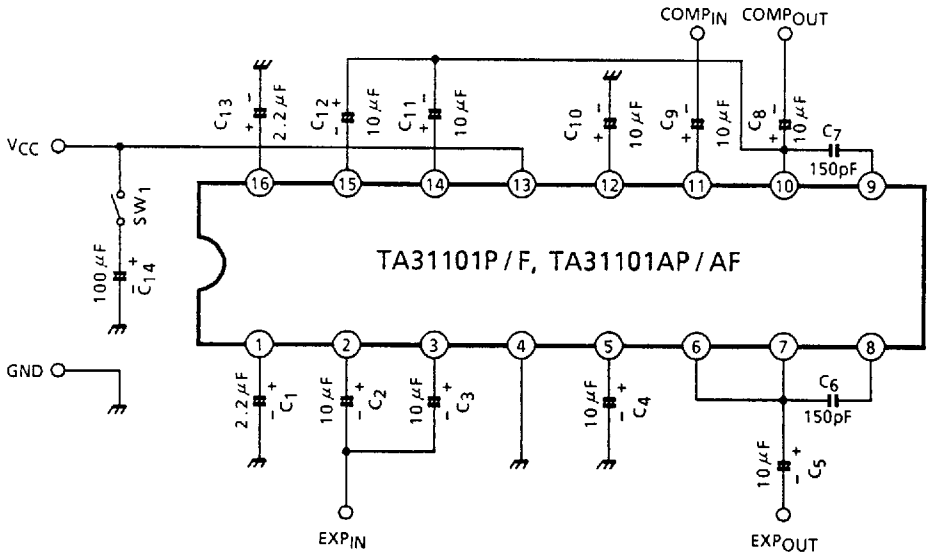

TEST CIRCUIT

(1) I_{CCQ}

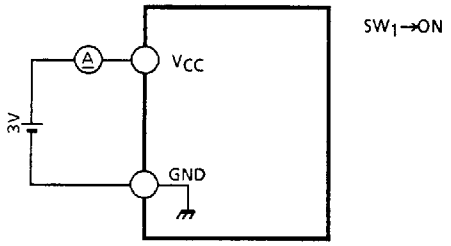

(2) V_{REF}

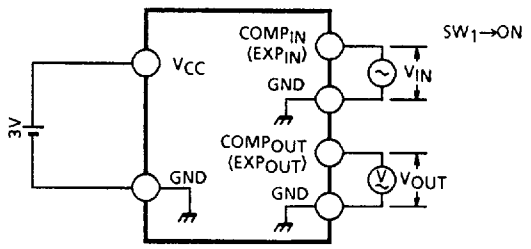

(3) THD_C, THD_E

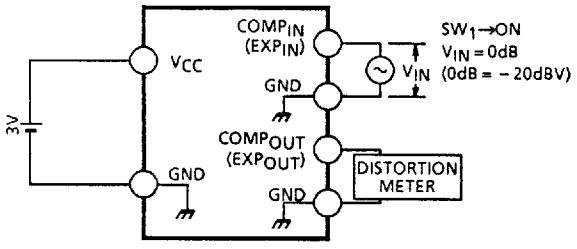

(4) V_{NOC}, V_{NOE}

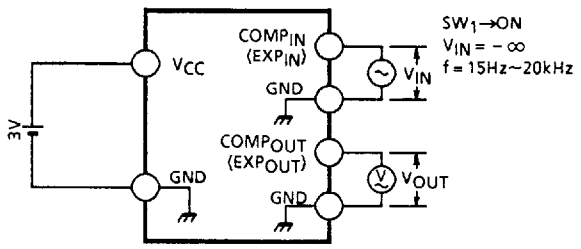

9097247 0019699 547

(5) CT (C→E)

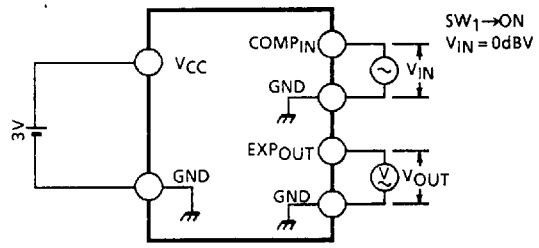

(6) CT (E→C)

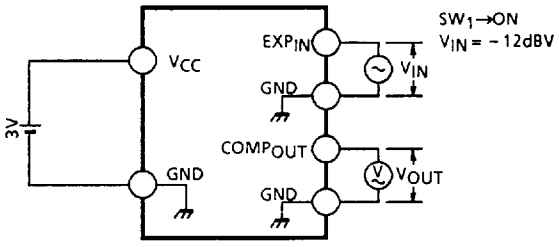

(7) RR_C, RR_E

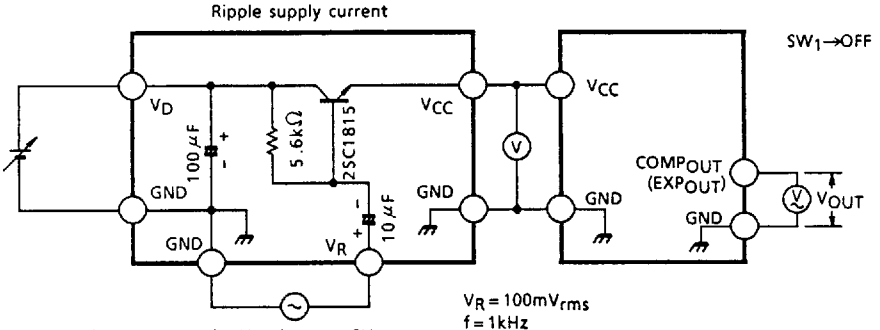

Setting is made so as to make V_{CC} become 3V.

(8) V_{OM}

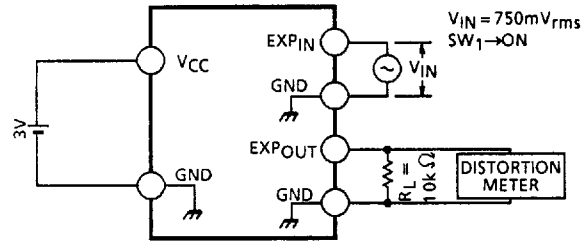

(9) $V_{OC1, 2, 3}$, $V_{OE1, 2, 3}$

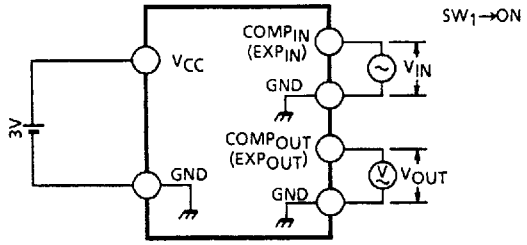

Note : OUTPUT DEVIATION

$= (V_{OUT} - V_{REF}) - V_{IN} \times \alpha\beta$

$\alpha\beta$: (COMP = 0.5, EXP = 2)

(0dB = −20dBV)

$V_{OC1} \rightarrow V_{IN}$ = +20dB $\quad V_{OE1} \rightarrow V_{IN}$ = +6.5dB

$V_{OC2} \rightarrow V_{IN}$ = −20dB $\quad V_{OE2} \rightarrow V_{IN}$ = −10dB

$V_{OC3} \rightarrow V_{IN}$ = −40dB $\quad V_{OE3} \rightarrow V_{IN}$ = −25dB

(10) FR_C, FR_E

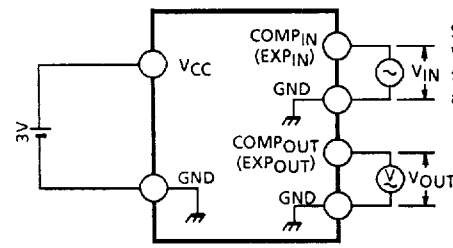

9097247 0019700 099

QUIESCENT CURRENT – SUPPLY VOLTAGE

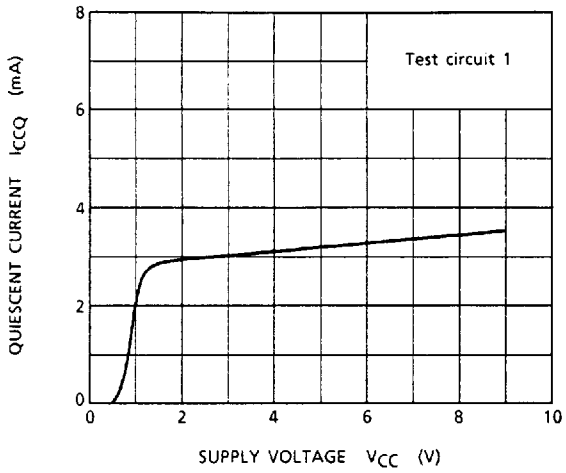

COMPRESSOR INPUT / OUTPUT CHARACTERISTICS (TA31101P, TA31101F)

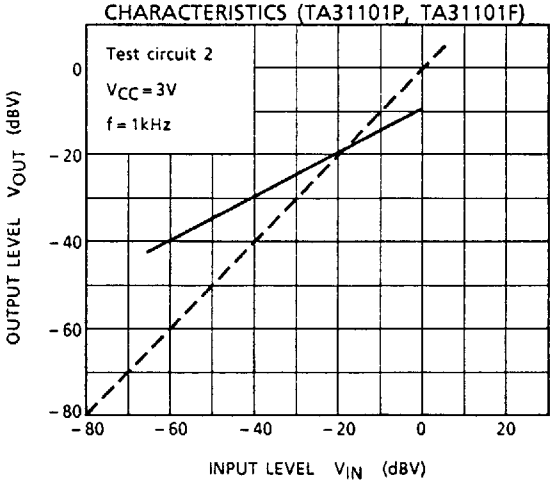

EXPANDER INPUT / OUTPUT CHARACTERISTICS (TA31101P, TA31101F)

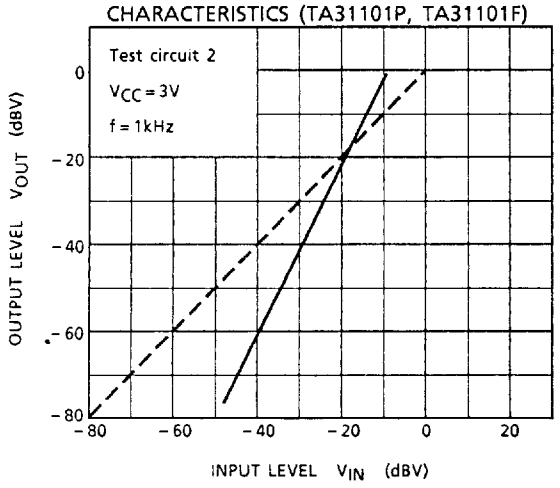

COMPRESSOR INPUT / OUTPUT CHARACTERISTICS (TA31101AP, TA31101AF)

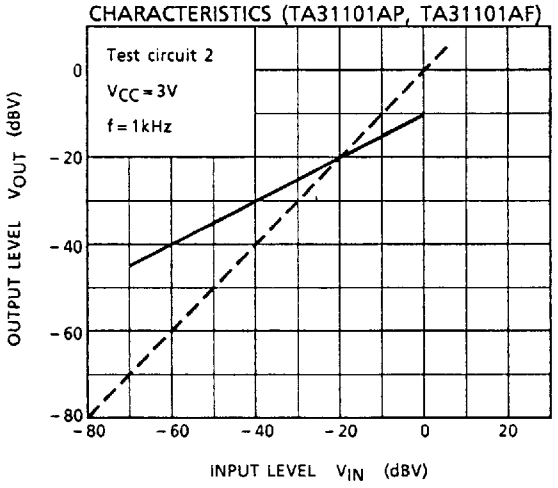

EXPANDER INPUT / OUTPUT CHARACTERISTICS (TA31101AP, TA31101AF)

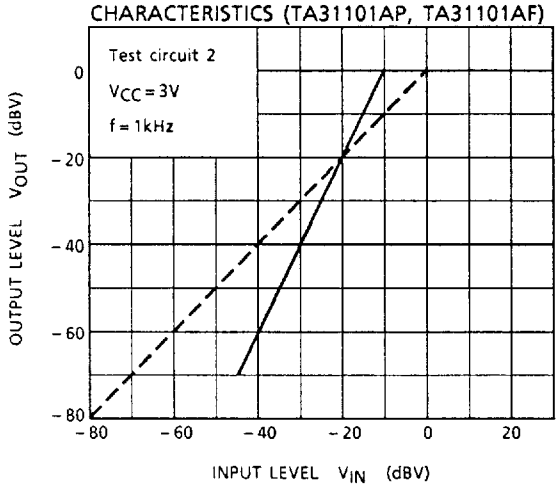

COMPRESSOR INPUT LEVEL – TOTAL HARMONIC DISTORTION

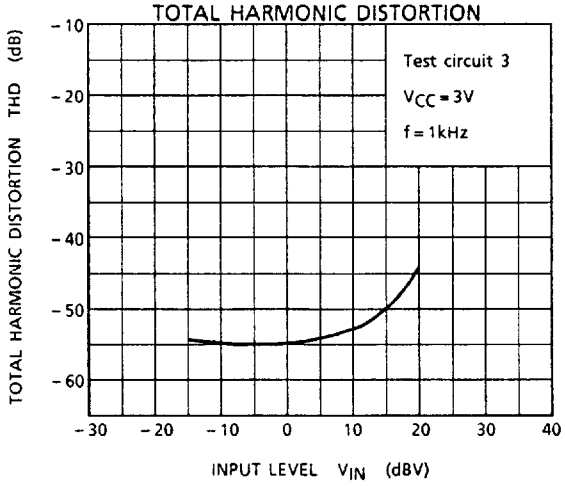

9097247 0019701 T25

TOTAL HARMONIC DISTORTION – EXPANDER INPUT LEVEL

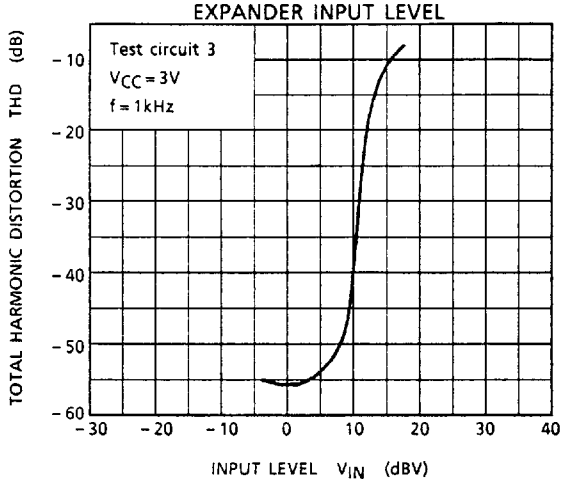

EXPANDER FREQUENCY CHARACTERISTICS

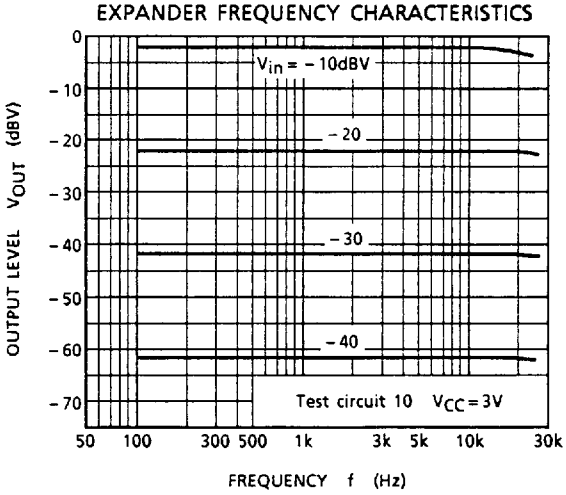

COMPRESSOR FREQUENCY CHARACTERISTICS

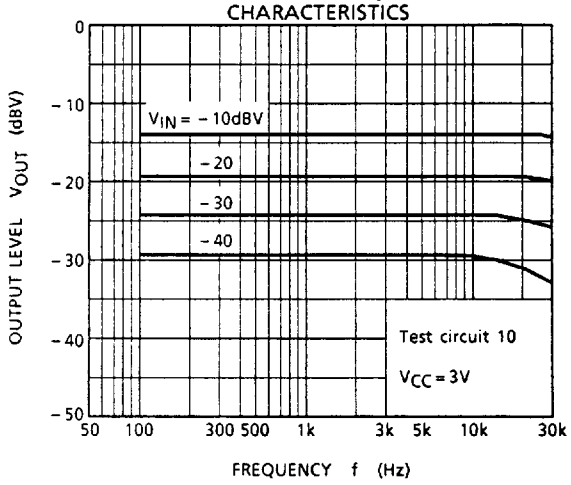

RIPPLE REJECTION RATIO – EXPANDER SUPPLY VOLTAGE

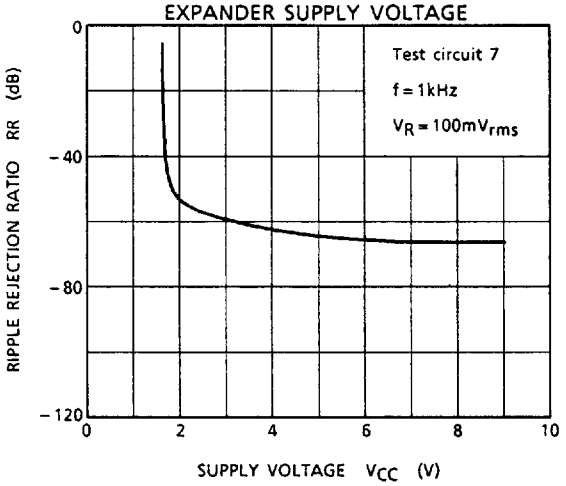

RIPPLE REJECTION RATIO – COMPRESSOR SUPPLY VOLTAGE

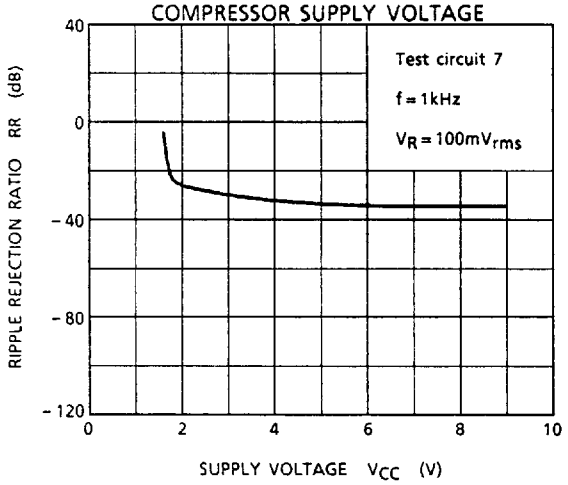

RIPPLE REJECTION RATIO – EXPANDER RIPPLE FREQUENCY

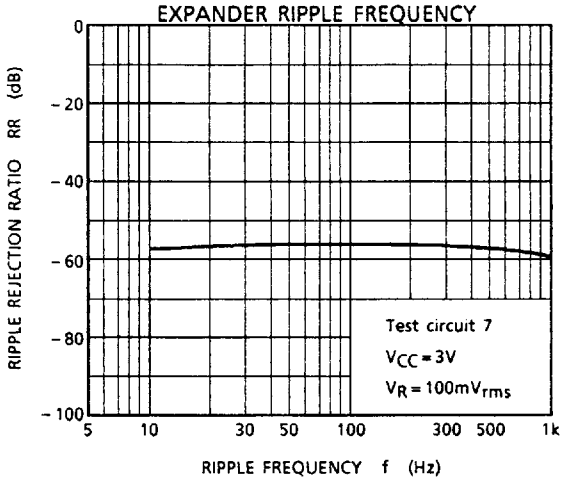

9097247 0019702 961

RIPPLE REJECTION RATIO – COMPRESSOR RIPPLE FREQUENCY

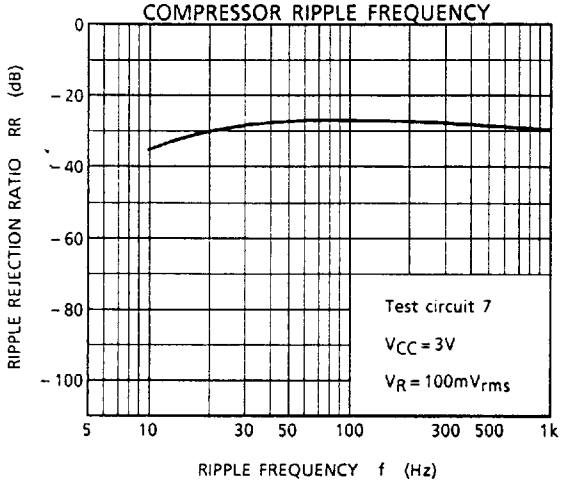

CROSSTALK CHARACTERISTICS (C→E)

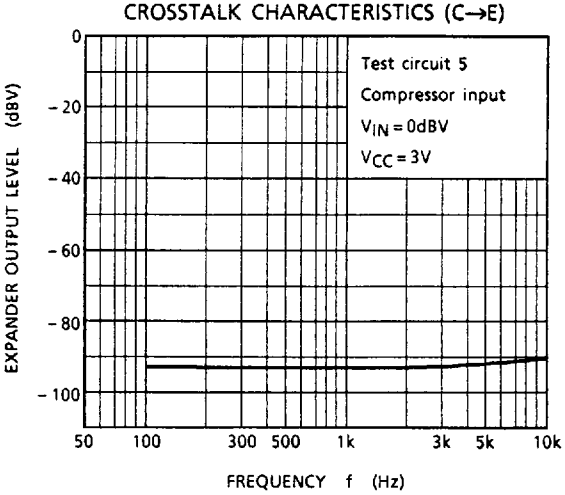

CROSSTALK CHARACTERISTICS (E→C)

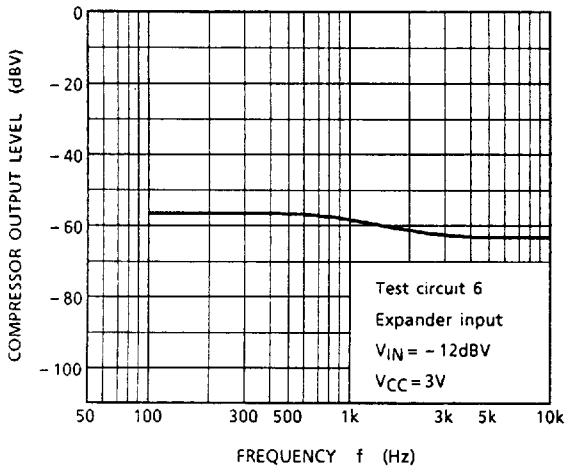

9097247 0019703 8T8

APPLICATION CIRCUIT

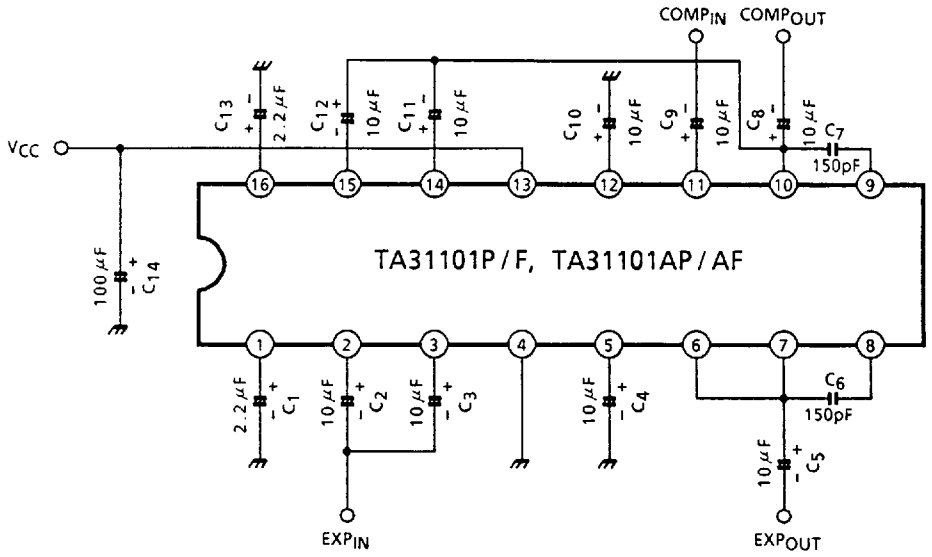

OUTLINE DRAWING

DIP16-P-300A

Unit : mm

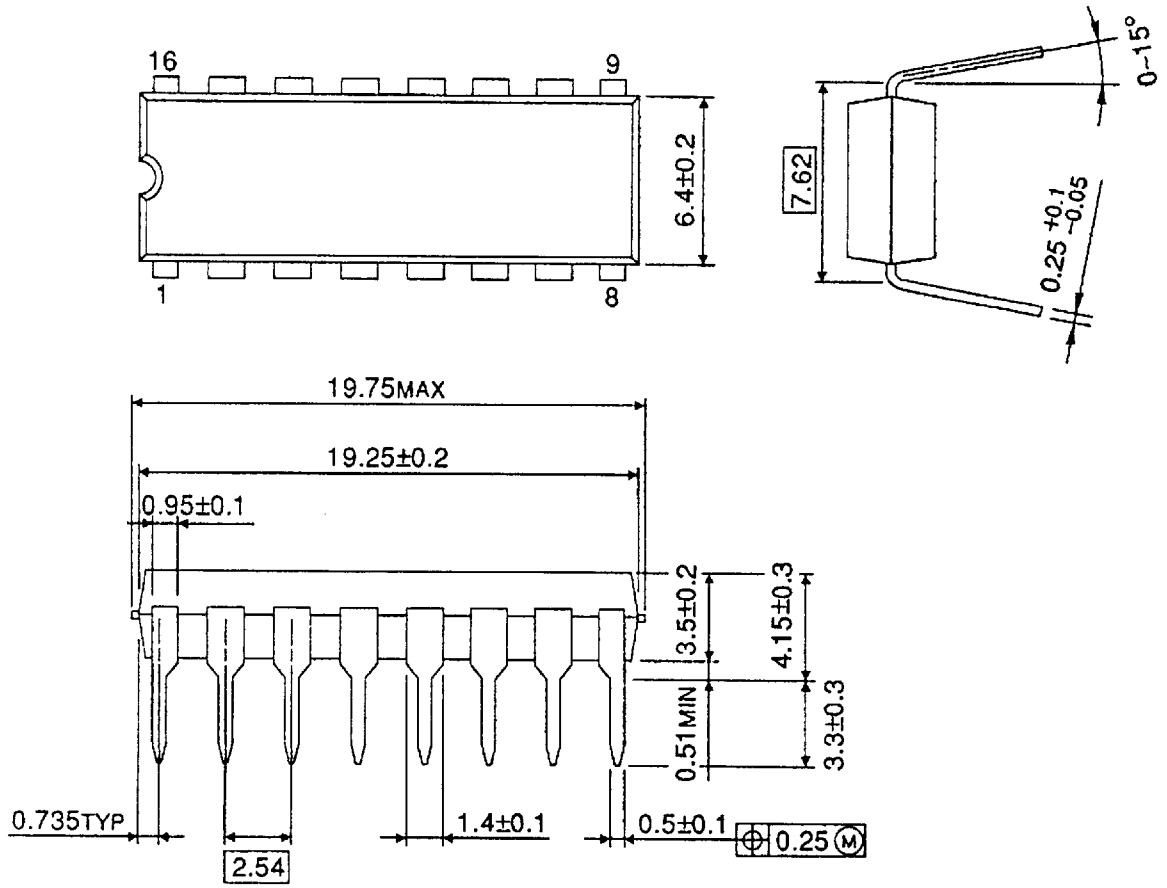

Weight : 1.1g (Typ.)

9097247 0019705 670

OUTLINE DRAWING

SSOP16-P-225

Unit : mm

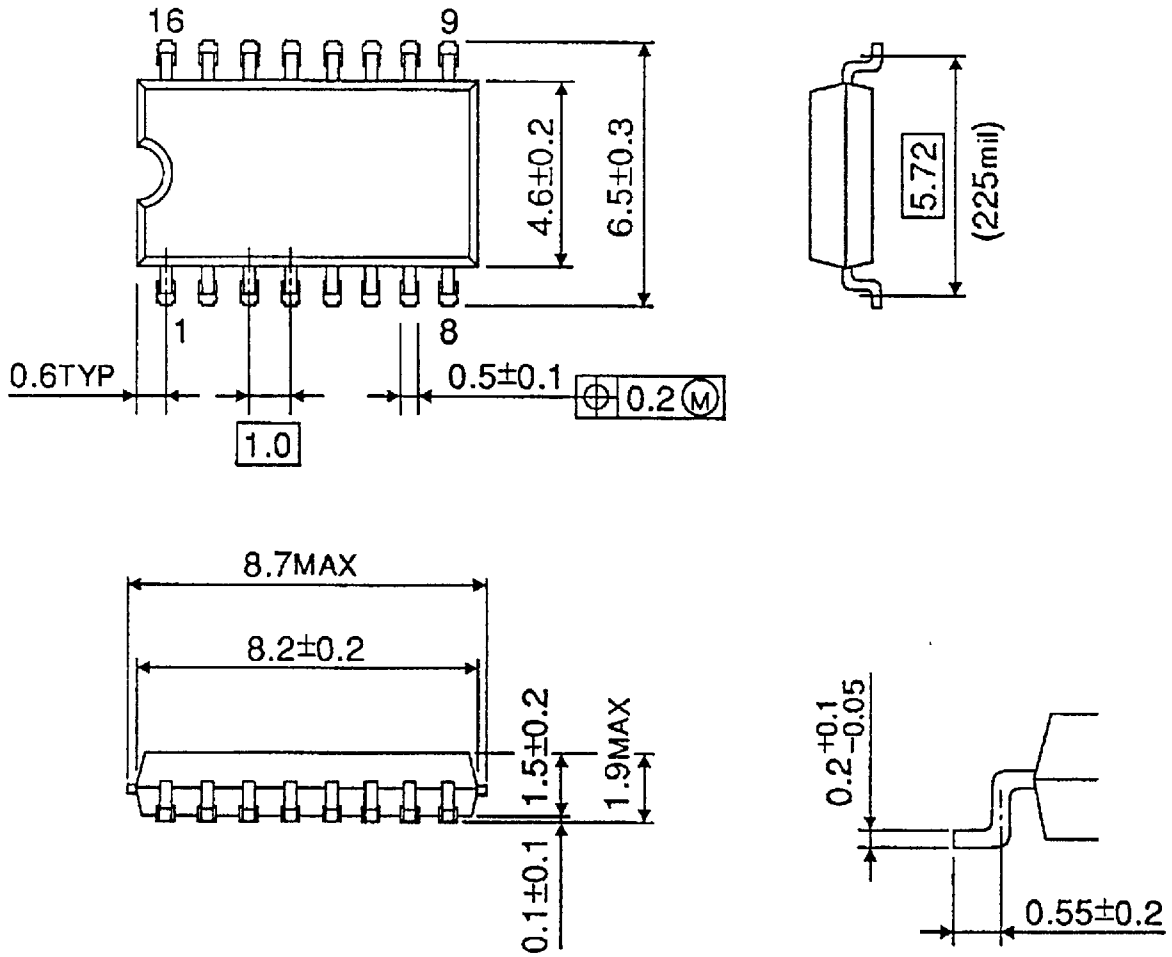

Weight : 0.14g (Typ.)