Model:TA2020FL-100

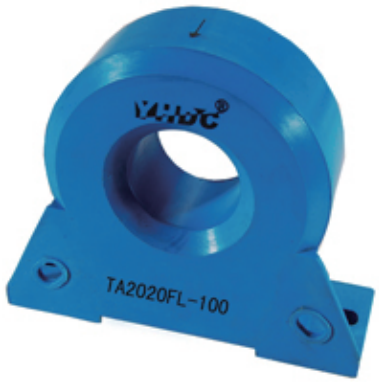

Characteristics:

Vacuum epoxy resin encapsulated, silicon steel sheet core, high overload ability.

Technical index:

Mounting type：Plate type
Material of the core：Silicon steel sheet
Flame resistance：UL94-V0
Execution standard：GB1208-2006
Operating temperature：-35℃～+85℃
Storage temperature：-45℃～+95℃
Frequency range：20Hz-20KHz
Dielectric strength：≥3.5KV 50Hz 1min

Electrical parameters:

Rated input	0-300	A
Max.input	506	A
Rated output	0-0.3	A
Turns ratio	1：1000	
Accuracy	±1	%
Linearity	≤0.2	%
Phase difference	≤54.3’	
max：Max. sampling resistance	20	Ω
Weight		g

Schematic diagram:

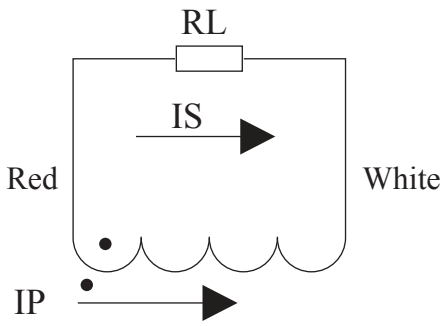

Dimensions（in mm）:

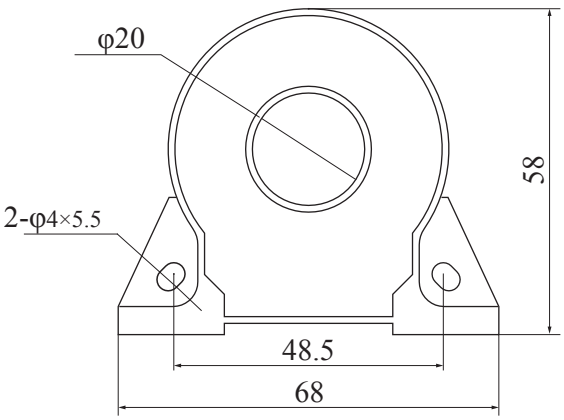

Front view

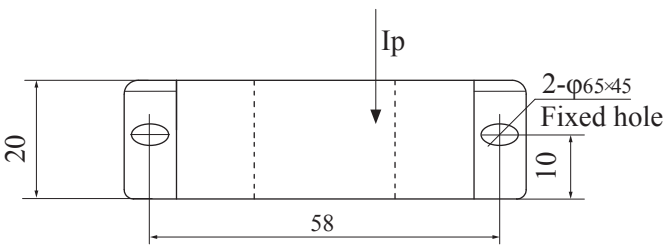

Bottom view