TAI-SAW TECHNOLOGY CO., LTD.
No. 3, Industrial 2nd Rd., Ping-Chen Industrial District,
Taoyuan, 324, Taiwan, R.O.C.
TEL: 886-3-4690038 FAX: 886-3-4697532
E-mail: tstsales@mail.taisaw.com Web: www.taisaw.com

Product Specifications Approval Sheet

Product Description: SAW Filter 738 MHz SMD 3.0×3.0 mm (BW=20 MHz)

TST Part No.: TA1862A

Customer Part No.:_____

Customer signature required

Company:_____

Division:_____

Approved by :_____

Date:_____

Checked by: David Chang

Approved by: Bob Chau

Date: 2015/06/16

1. Customer signed back is required before TST can proceed with sample build and receive orders.
2. Orders received without customer signed back will be regarded as agreement on the specifications.
3. Any specifications changes must be approved upon by both parties and a new revision of specifications shall be released to reflect the changes.

TAI-SAW TECHNOLOGY CO., LTD.

No. 3, Industrial 2nd Rd., Ping-Chen Industrial District,
Taoyuan, 324, Taiwan, R.O.C.
TEL: 886-3-4690038 FAX: 886-3-4697532
E-mail: tstsales@mail.taisaw.com Web: www.taisaw.com

SAW Filter 738 MHz

MODEL NO.: TA1862A REV. NO.:1

A. MAXIMUM RATING:

1.Input Power Level: 10 dB_m
2.DC voltage: 3 V
3.Operating Temperature: -40°C to +85°C
4.Storage Temperature: -40°C to +85°C

RoHS Compliant
Lead free
Lead-free soldering

Electrostatic Sensitive Device (ESD)

B. ELECTRICAL CHARACTERISTICS:

Item		Unit	Min.	Typ.	Max.
Center frequency	**Fc**	MHz	-	738	-
Insertion Loss (728~748 MHz)	**IL**	dB	-	2.3	3.5
Amplitude Ripple (728~748 MHz)		dB	-	0.5	1.8
VSWR (728~748 MHz)		-	-	1.7	2.5
Attenuation (Reference level from 0 dB)					
538 ~ 705 MHz		dB	40	46	-
783 ~ 803 MHz		dB	37	44	-
803 ~ 938 MHz		dB	45	52	-
Temperature coefficient of frequency		ppm/k	-	-36	-

C. MEASUREMENT CIRCUIT:

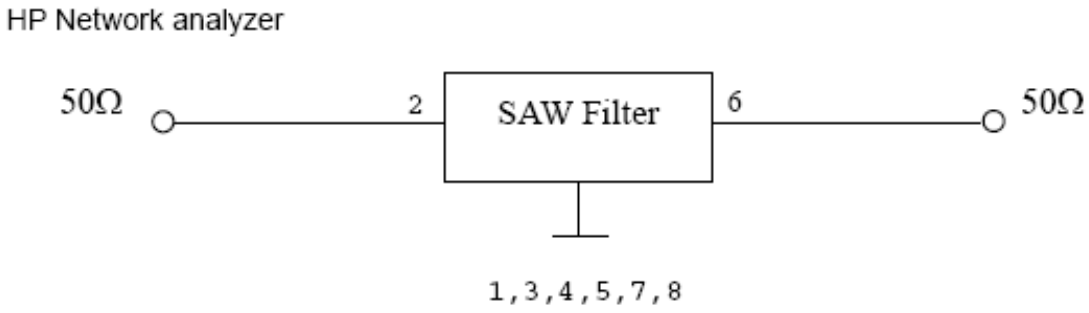

D. OUTLINE DRAWING:

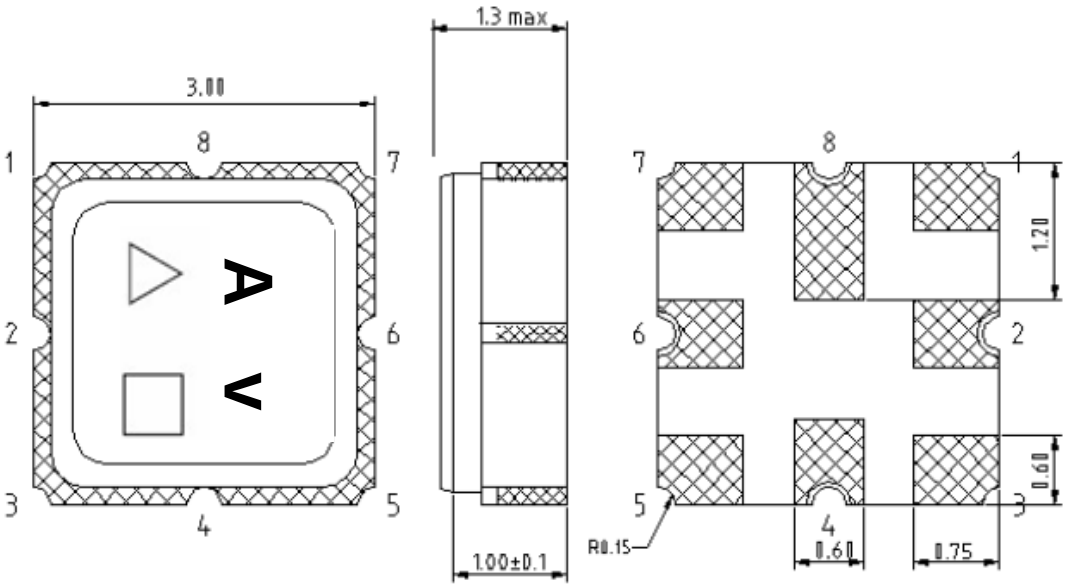

2: Input

6: Output

1, 3, 4, 5, 7, 8: Ground

Unit: mm

△：Year Code (2011->1, 2012->2, …, 2019->9, 2020->0)

□：Date Code

Date Code Table:

WK01	WK02	WK03	WK04	WK05	WK06	WK07	WK08	WK09	WK10	WK11	WK12	WK13
A	B	C	D	E	F	G	H	I	J	K	L	M
WK14	WK15	WK16	WK17	WK18	WK19	WK20	WK21	WK22	WK23	WK24	WK25	WK26
N	O	P	Q	R	S	T	U	V	W	X	Y	Z
WK27	WK28	WK29	WK30	WK31	WK32	WK33	WK34	WK35	WK36	WK37	WK38	WK39
a	b	c	d	e	f	g	h	i	j	k	l	m
WK40	WK41	WK42	WK43	WK44	WK45	WK46	WK47	WK48	WK49	WK50	WK51	WK52
n	o	p	q	r	s	t	u	v	w	x	y	z

E. PCB Footprint:

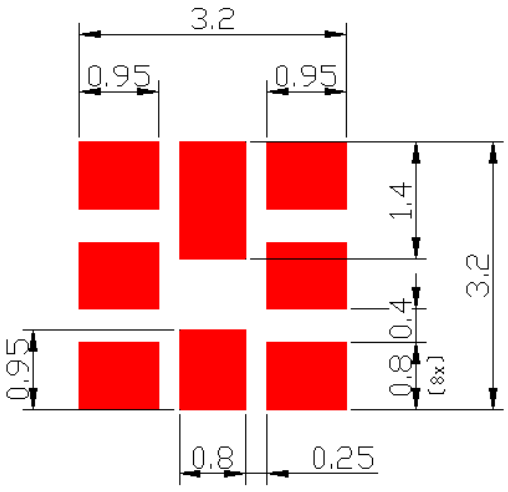

F. Frequency Characteristics:

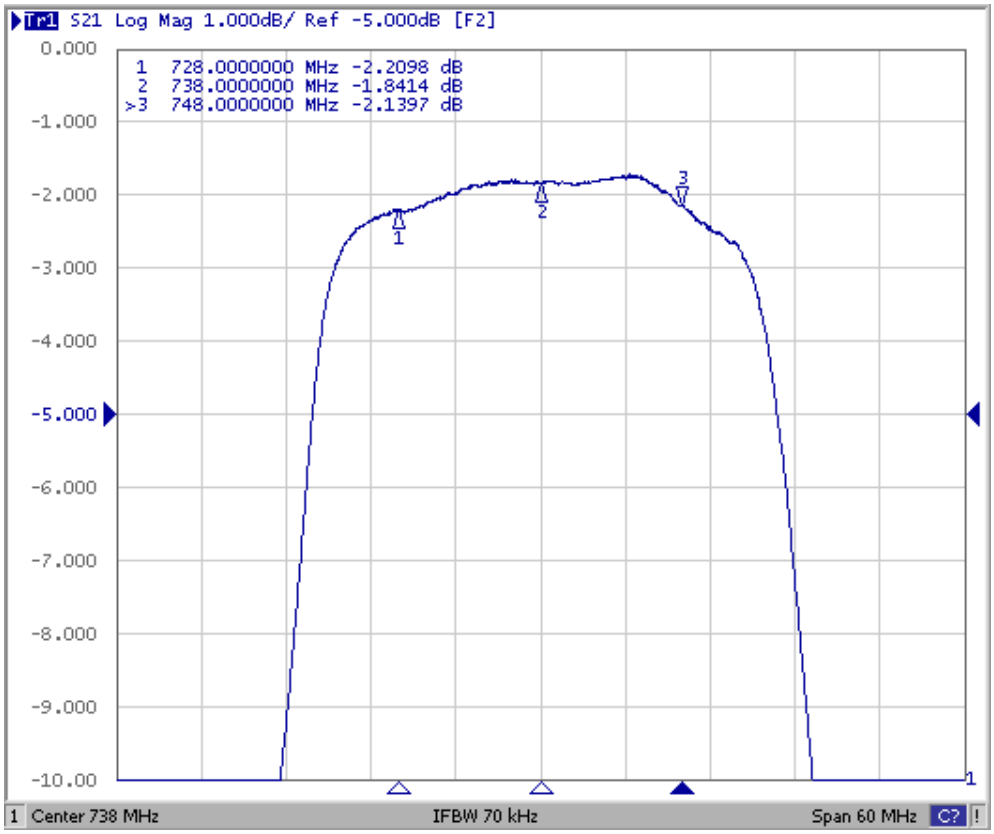

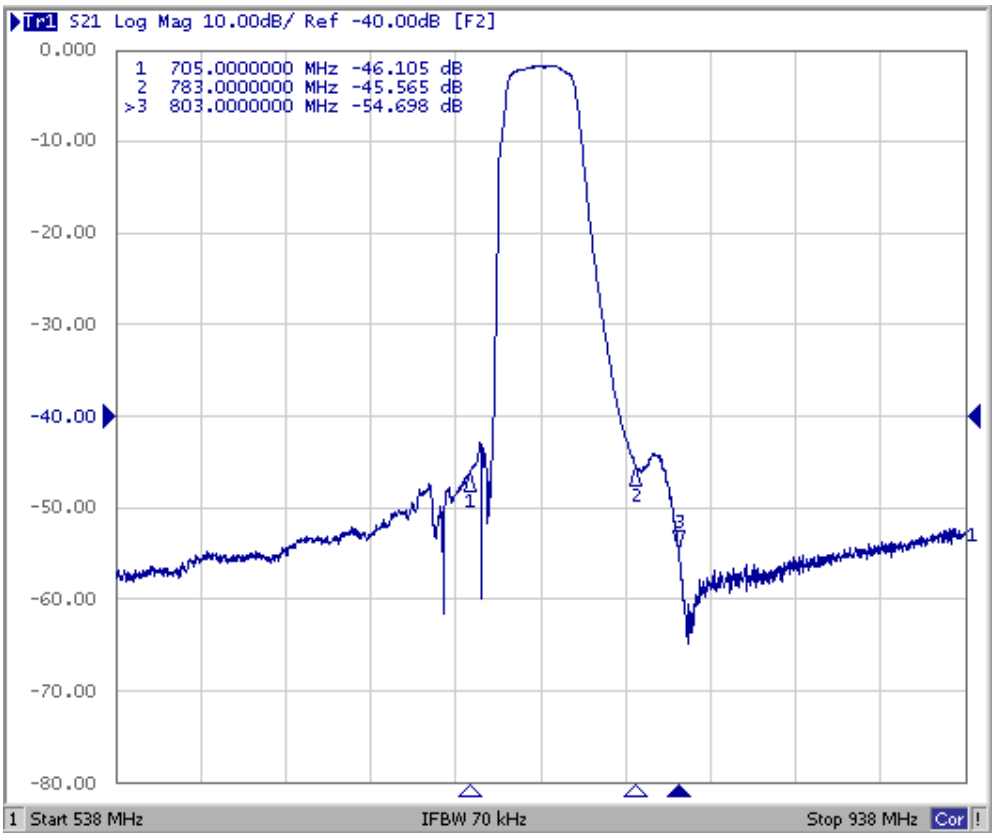

Reflection Functions:

S11

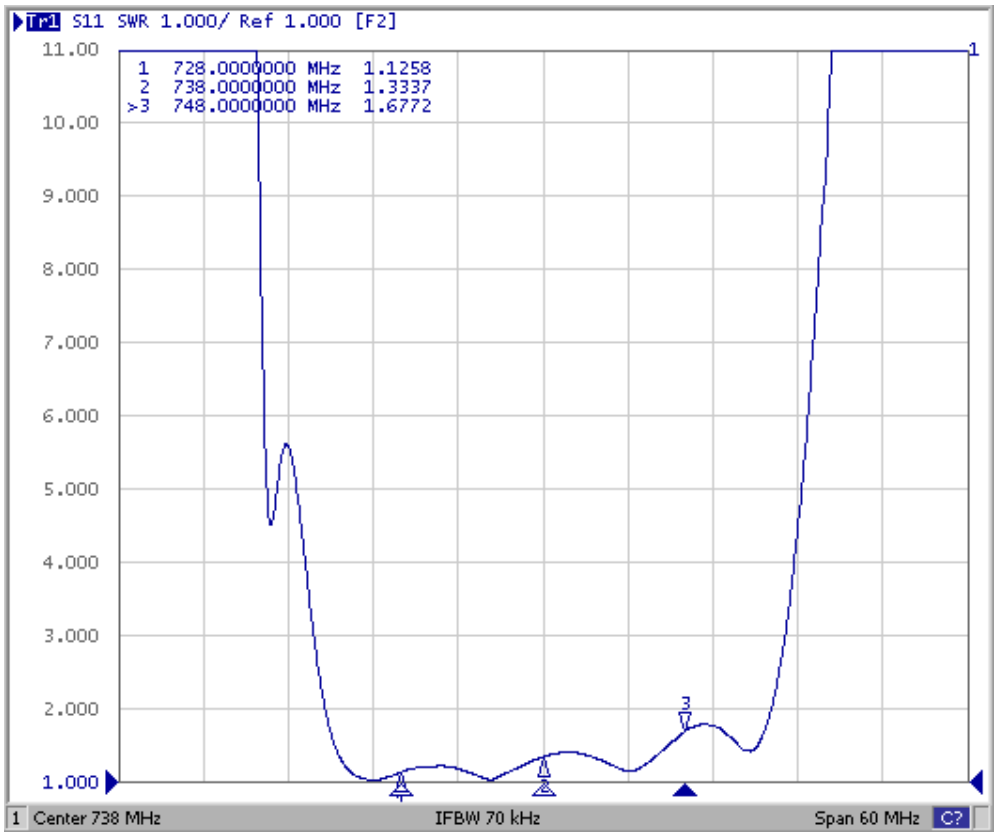

S22

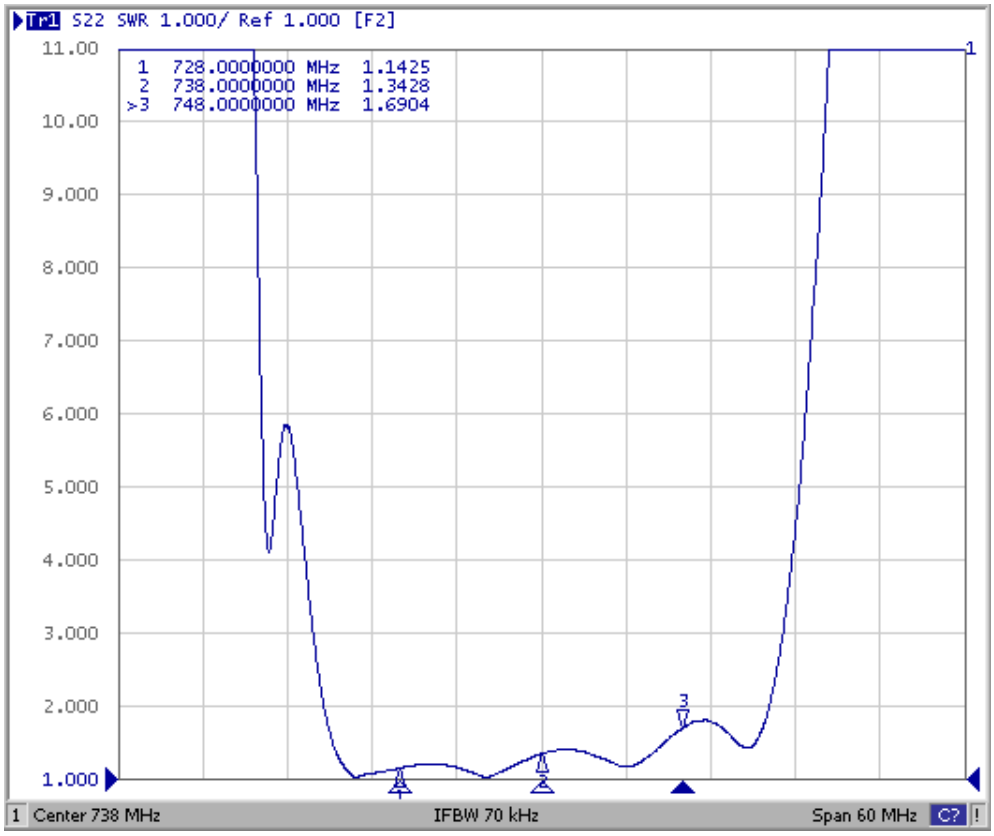

G. PACKING:

1. REEL DIMENSION

(Please refer to FR-75D10 for packing quantity)

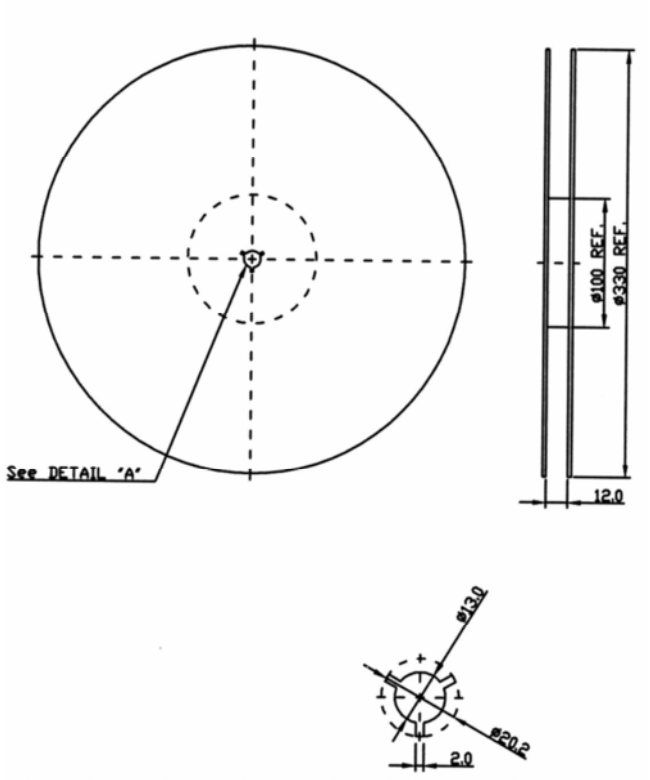

2. TAPE DIMENSION

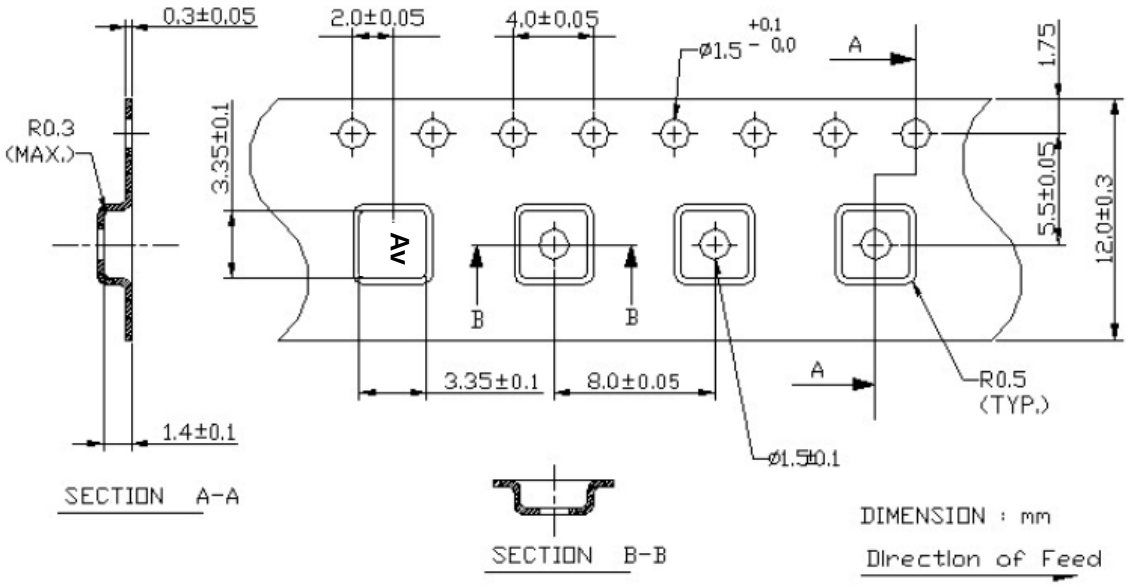

H. RECOMMENDED REFLOW PROFILE:

1. Preheating shall be fixed at 150~180℃ for 60~90 seconds.
2. Ascending time to preheating temperature 150℃ shall be 30 seconds min.
3. Heating shall be fixed at 220℃ for 50~80 seconds and at 250±10℃ peak (max. 10sec).
4. Time: 2 times.

