Isolated Transmitter

TAxxxPW series

MORNSUN®

Programmable analog isolators with isolated power output



FEATURES

- 3-port electrical isolation between input, output and power supply
- 12.5mm slim case
- High accuracy (0.1% F.S.)
- High linearity (0.1% F.S.)
- Low temperature drift(50PPM/° C)
- Low-power dissipation
- Excellent EMC performance
- Mini USB port communication
- Input / Output range programmable
- High reliability(MTBF>500,000 hours)

AxxxPW series analog isolator and isolator with isolation power output which are mainly applied in industrial automation systems can isolated convert analog input signal of the industrial field instruments to the matched analog output signal for the DCS/PLC, realizing the acquisition and transmission of field signal. An independent power supply is needed for the product and the port of power supply, input and output are isolated from each other. This series of products contain combinations of 1 input 1 output, 1 input 2 output, 2 input 2 output and so on. The thickness of 12.5mm meet the need for high density field installation.

Selection Guide

Transformation types	1 input 1 output	2 input 2 output	1 input 2 output
Current input, Current output (Isolator)	TA100PW	TA200PW	TA600PW
Current input, Voltage output (Isolator)	TA120PW	TA220PW	TA620PW
Voltage input, Voltage output (Isolator)	TA130PW	TA230PW	TA630PW
Voltage input, Current output (Isolator)	TA140PW	TA240PW	TA640PW
Current input, Current output (Isolators with isolated power output)	TA105PW	TA205PW	TA605PW
Current input, Voltage output (Isolators with isolated power output)	TA125PW	TA225PW	TA625PW
Input signal	--		
Input type	Input signal		
Current input	4~20mA / 0~20mA（Programmable）		
Voltage input	0~5V / 0~10V / 1~5V / 2~10V（Programmable）		
Output signal	--		
Output type	Output signal		
Current output	4~20mA / 0~20mA（Programmable）		
Voltage output	0~5V / 0~10V / 1~5V / 2~10V（Programmable）		

Note:1. Customers need to choose the type of the input signal, output signal and range. We could also offer customer design for special input and output;
2. You can get the USB Adapter T-01 for the isolator from MORNSUN free of charge if you need.

Input Specifications

Item		Operating Conditions	Value
Power input parameters	Input voltage		18~30VDC(Typical values 24VDC)
	Power dissipation (isolators)		1 input 1output≤0.9W 1 input 2 output, 2 input 2 output≤1.2W
	Power dissipation (isolators with isolated power output)		1 input 1output≤1.5W 1 input 2 output, 2 input 2 output≤2.5W
	Power protection		Reverse polarity protection, over-voltage protection
Field Area	Input impedance		≤ 25Ω（Input current signal）
			≥500KΩ（Input voltage signal）
	Isolation power output		No-load 24VDC±10%, 20mA output ≥ 20VDC
	Distribution output protection		Short-circuit protection

MORNSUN Guangzhou Science & Technology Co., Ltd. reserves the copyright and right of final interpretation

Output Specifications

Item		Operating Conditions					
Control Area	Fault output	--					
	Output type	4~20mA	0~20mA	1~5V	0~5V	0~10V	2~10V
	Break alarm signal	About 21mA	About 21mA	About 5.25V	About 5.25V	About 10.5V	About 10.5V
	Normal operation	Corresponding channel red light off					
	Input over-range	Corresponding channel red lights often flicker (0~20mA/0~5V/0~10V of Input type is no such funstion)					
	Break alarm	Red light of the corresponding channel input disconnection(red, Single-channel 1pcs, Dual-channel 2pcs)					
	Load capacity	≤500Ω (Output current maximum)					
		≥1MΩ (Output voltage maximum)					
	Communication port	Mini USB port					
	Communication protocol	See "MORNSUN Modbus Protocol Rules"					

Transmission Specifications

Item	Operating Conditions	Value
Precision	Ta=25℃, Full-scale range,100% load	0.1%F.S.
Zero Offset	Ta=25℃, Sin=0，100% load	0.1%F.S.
Temperature Drift	Operating temperature range of -25 ~ +71℃	0.0035%F.S./ ℃
Response time		< 0.5s

General Specifications

Item	Operating Conditions	Value
Electrical Isolation	1Min leakage current ≤5mA	Field area and control area:2KVAC/3KVDC,1min,leakage current ≤5mA
		Output and power supply,2KVAC/3KVDC,1min,leakage current ≤5mA
Insulation Resistance	Signal input port, signal output port	100MΩ， 500VDC

Physical Specifications

Casing Material	PA66
Safety Class	IP20 (IEC60529 / EN60529)
Dimensions	35mm DIN-rail package: T-rail card package (DIN50022), pluggable connection pin, thickness 12.5mm
Weight	1 input 1 output: 100g;2 input 2 output & 1 input 2 output: 135g, typ
Cooling	Free convection

EMC Specifications

EMI	Conducted Emission	CISPR22/EN55022 CLASS A	
	Radiated Emission	CISPR22/EN55022 CLASS A	
EMS	Electrostatic Discharge	IEC/EN61000-4-2 Contact ±4KV/Air ±8KV	perf. Criteria B
	Radiation Iimmunity	IEC/EN61000-4-3 10V/m	perf. Criteria A
	EFT	IEC/EN61000-4-4 power supply port ±2KV	perf. Criteria B
		IEC/EN61000-4-4 signal port ±1KV	perf. Criteria B
EMS	Surge Immunity	IEC/EN61000-4-5 power supply port ±1KV/2KV	perf. Criteria B
		IEC/EN61000-4-5 signal port ±1KV (line-to-ground)	perf. Criteria B
	Conducted Disturbance Immunity	IEC/EN61000-4-6 3 Vr.m.s	perf. Criteria A

MORNSUN Guangzhou Science & Technology Co., Ltd. reserves the copyright and right of final interpretation

Application Precautions

1. Please read the instructions carefully before use; contact our technical support if you have any problem;
2. Do not use the product in hazardous areas;
3. Use DC power supply for the product. and 220V AC power supply is prohibited;
4. Do not disassemble or assemble the product without permission to avoid explosion protection failure or malfunction of product.

Design Reference

1. Wiring diagram for product application

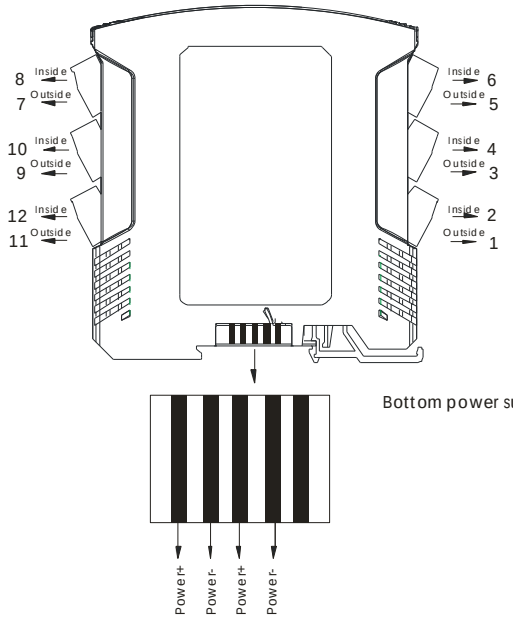

Bottom power supply port

Note: When use bottom power supply, anyone group or both is OK.

Programmable analog signal isolator

PIN	Description (2 input 2 output)
1	Signal 2 input-
2	Signal 2 input+
5	Signal 1 input-
6	Signal 1 input+
7	Signal 1 output-
8	Signal 1 output+
9	Signal 2 output-
10	Signal 2 output+
11	power input-
12	power input+

Programmable analog signal isolator with isolation power output

PIN	Distributor wiring method	Isolator wiring method
	Description (2 input 2 output)	Description (2 input 2 output)
1	Signal 2 isolated input-	Signal 2 input+
2	Signal 2 isolated input+	/
3	/	Signal 2 input -
4	/	Signal 1 input -
5	Signal 1 isolated input-	Signal 1 input +
6	Signal 1 isolated input+	/
7	Signal 1 output-	Signal 1 output-
8	Signal 1 output+	Signal 1 output+
9	Signal 2 output-	Signal 2 output-
10	Signal 2 output+	Signal 2 output+
11	power input-	power input-
12	power input+	power input+

TA1x0PW

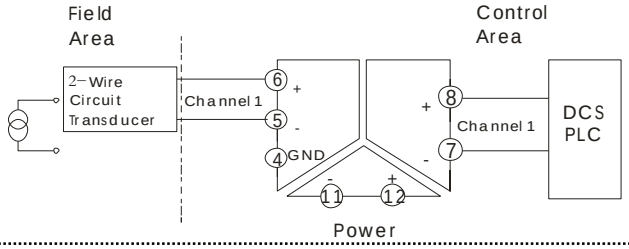

TA1x5PW

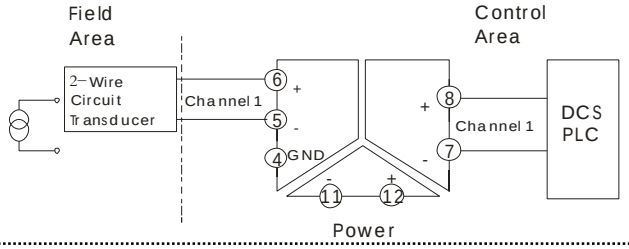

MORNSUN Guangzhou Science & Technology Co., Ltd. reserves the copyright and right of final interpretation

TA2x0PW

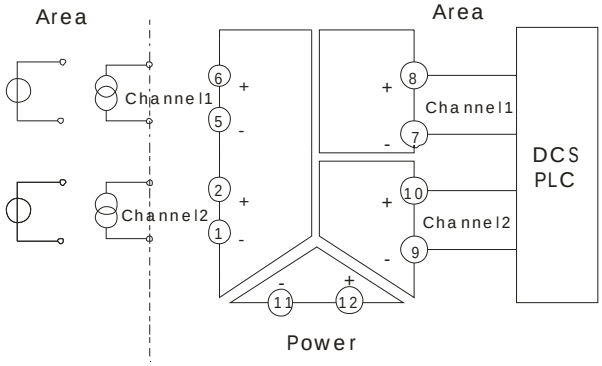

TA2x5PW

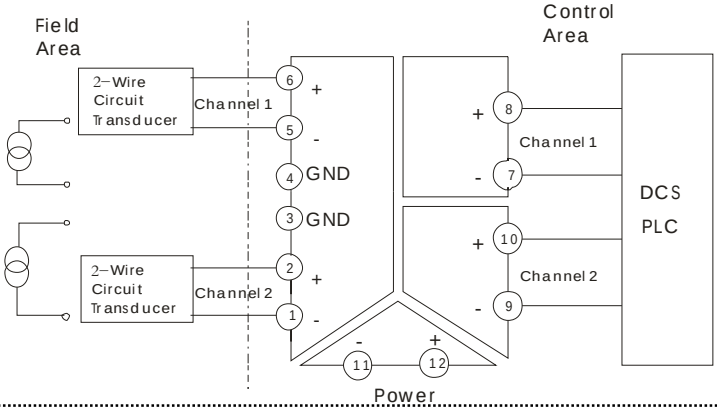

TA6x0PW

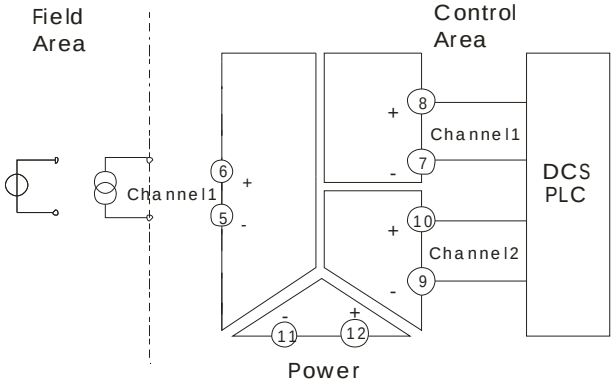

TA6x5PW

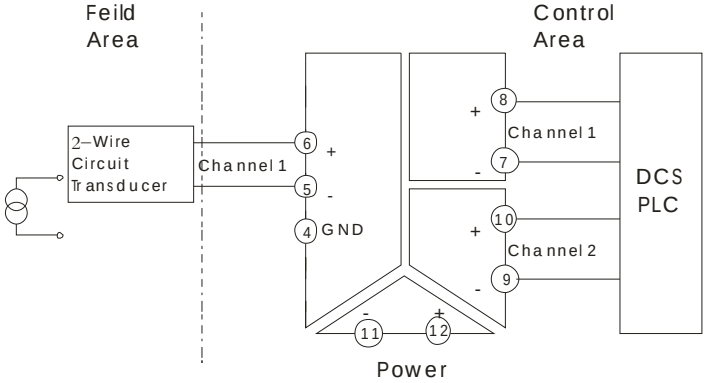

① Use dismountable terminals for instrument wiring, easy to operate;
② The sectional area of conductor is 0.5mm^2-2.5 mm^2;
③ The length of conductor exposed is 8mm and is fastened by M3 bolts.

2. For more information Please find the application notes on www.mornsun-power.com

Installation & disassembly

Installation

DIN35mm standard rail installation

1. Insert the top of the instrument card in the rail;
2. Push the bottom of the instrument into the rail.

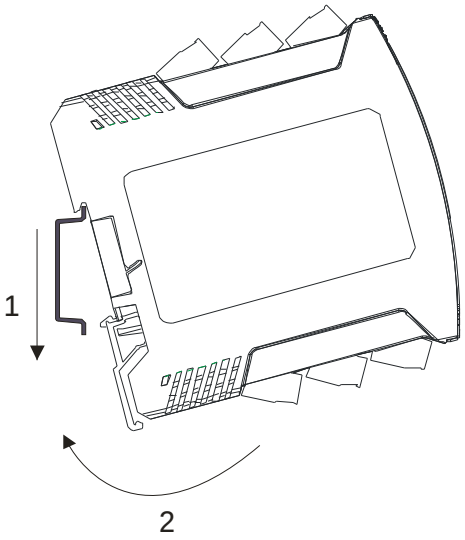

Disassembly

1. Insert to the clamp on the lower end of instrument with a screw driver (tool edge width≤6mm);
2. Push the screw driver up, and pry the clamp down;
3. Pull the instrument up out of the guide rail.

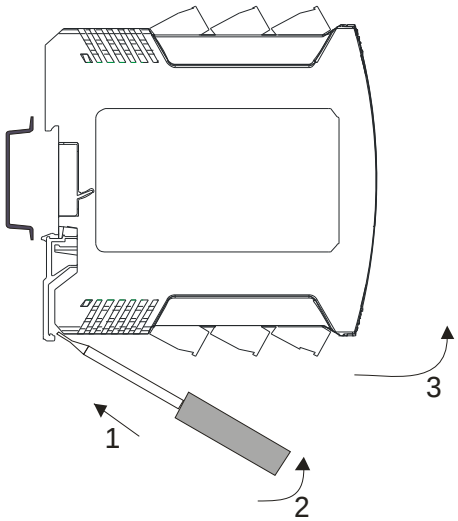

MORNSUN Guangzhou Science & Technology Co., Ltd. reserves the copyright and right of final interpretation

Dimensions

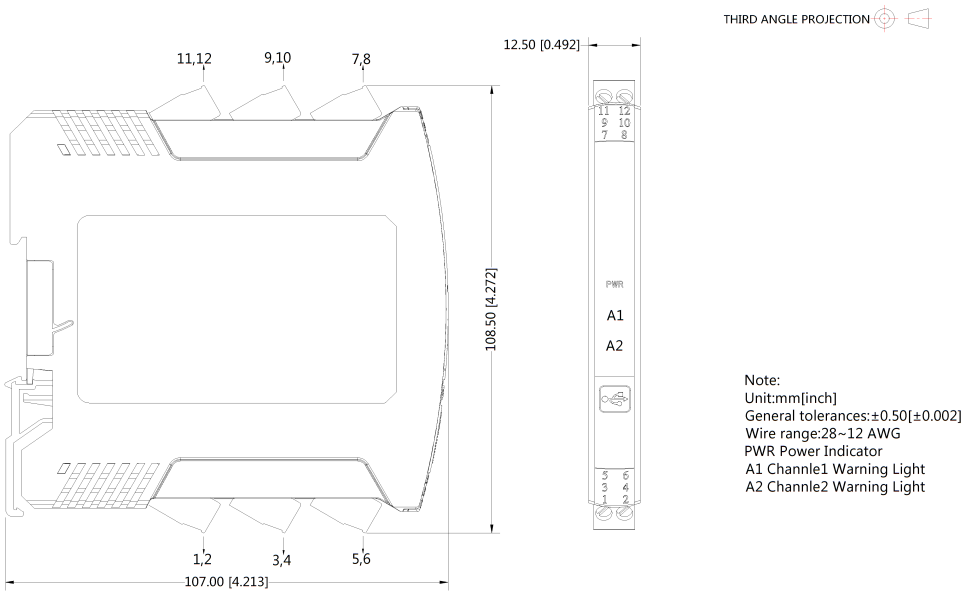

Note:

1. Packing information please refer to "Product Packing Information".Packing bag number: 58040010;
2. Unless otherwise specified, parameter indexes in this datasheet is measured under the conditions of Ta=25° C, humidity<75% with nominal input voltage and rated output load;
3. All testing methods in this datasheet are based on our Company's corporate standards;
4. The parameter indexes above are for the modules listed in this datasheet, for non-standard module's parameter indexes, please contact our technicians for specific information;
5. We can provide custom design;
6. Specifications are subject to change without prior notice.

Mornsun Guangzhou Science & Technology Co., Ltd.
Address: No. 5, Kehui St. 1, Kehui Development Center, Science Ave., Guangzhou Science City, Luogang District, Guangzhou, P. R. China
Tel: 86-20-38601850-8801 Fax: 86-20-38601272 E-mail: info@mornsun.cn

MORNSUN Guangzhou Science & Technology Co., Ltd. reserves the copyright and right of final interpretation