SHEET 1 OF 1

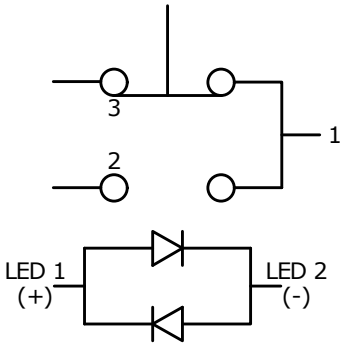

SCHEMATIC
▲ ON - ON
SPDT Illuminated

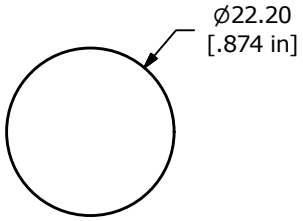

PANEL CUT-OUT
PANEL THICKNESS 1-10mm

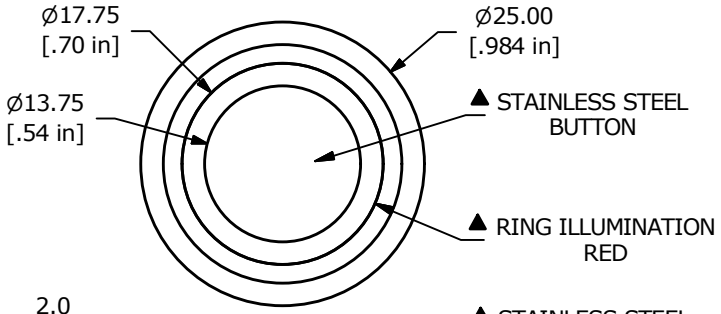

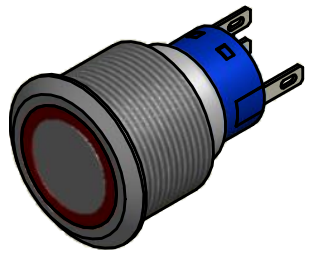

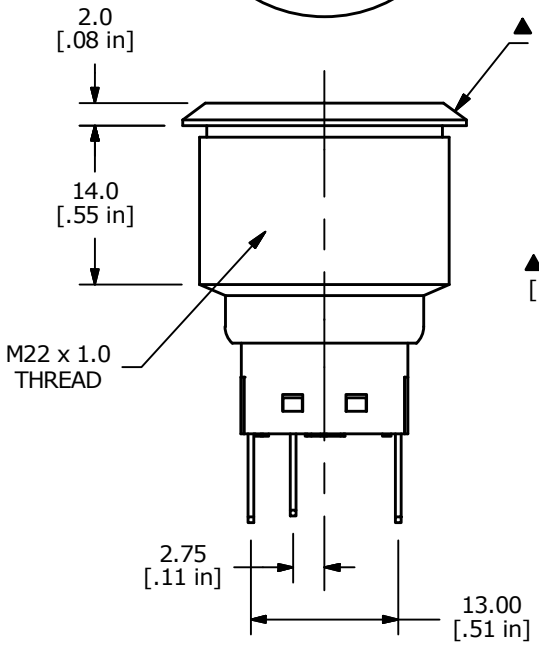

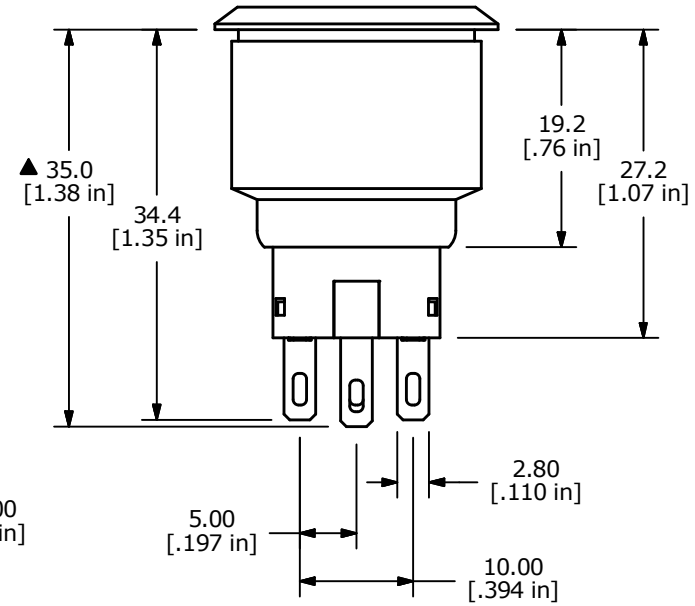

NOTE:
1. ALL DIMENSIONS IN MM [INCH]
2. GENERAL TOLERANCE: X.X = ±0.4
X.XX = ±0.25
3. TERMINAL NUMBERS FOR REF ONLY
▲ 4. CONTACT MATERIAL: SILVER
5. RATING: 3A 250 VAC cUL
6. ELECTRIC LIFE: 50,000 MAKE-AND-BREAK CYCLES
AT FULL LOAD.
7. MECHANICAL LIFE: 500,000 CYCLES.
8. INSULATION RESISTANCE: 1,000 MΩ @ 500VDC MIN.
9. DIELECTRIC STRENGTH: 2,000 VAC MIN. FOR 1 MINUTE
10. CONTACT RESISTANCE: 50mΩ MAX. @ 1A 12VDC
11. OPERATING TEMP.: -20°C to 55°C
12. ▲ DENOTES CRITICAL PARAMETER.
▲ 13. LAMP VOLTAGE: 20mA 3V
14. TRAVEL: 3.2mm
15. ACTUATION FORCE: 2.5 ± 1.0 N
16 MOUNTING NUT TORQUE: 5-14 Nm
17. INGRESS PROTECTION: IP67
18. HARDWARE SUPPLIED: O-RING AND HEXNUT

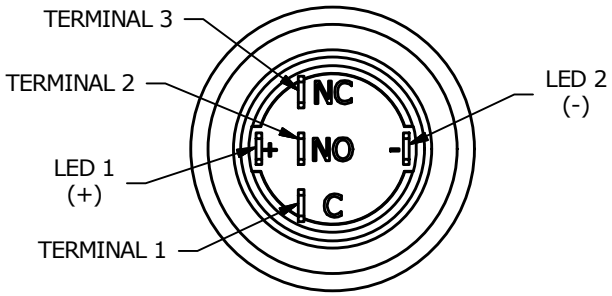

REV	PCR NO	DESCRIPTION	DATE	BY
B	22130	Update housing dim. to 1 place decimal	1/22/16	MW
A	21928	New Release	7/24/15	rc

THE INFORMATION CONTAINED IN THIS DOCUMENT IS PROPRIETARY TO E-SWITCH AND IS NOT TO BE COPIED OR TRANSFERRED

E•SWITCH®

TITLE ULV7F23SS311

SCALE	DATE	DR	DWG	REV
1.5 : 1	7/24/2015	rc	T970000	B