EPCOS

Surge Arrester **T90-A230XF**

3-Electrode-Arrester **Ordering code: B88069X6710C253**

DC spark-over voltage [1) 2) 3)]	184 ... 276	V
DC spark-over voltage [2) 4)]	176 ... 550	V
Impulse spark-over voltage		
at 100 V/µs - for 99 % of measured values [3)]	< 650	V
- for 50 % of measured values [3)]	< 550	V
at 1 kV/µs - for 99 % of measured values [3)]	< 800	V
- for 50 % of measured values [3)]	< 700	V
Insulation resistance at 100 V_{dc} [3)]	> 1	GΩ
Capacitance at 1 MHz [3)]	< 1.5	pF
Impulse life		
300 operations 10/1000 µs [5)]	200	A
Nominal impulse discharge current		
10 operations 8/20 µs [5)]	5	kA
10 operations 8/20 µs [6)]	5	kA
Nominal alternating discharge current		
10 operations 50 Hz; 1 s [5)]	5	A_{rms}
10 operations 50 Hz; 1 s [6)]	5	A_{rms}
DC hold-over voltage [8)]		
at 52 V_{dc} / 260 Ω	< 150	ms
at 80 V_{dc} / 330 Ω	< 150	ms
at 135 V_{dc} / 1300 Ω	< 150	ms
Activation after reflow soldering [7)]		
1 operation U_{RMS} = 600 V; 1 s	2	A
Weight	~ 0.8	g
Storage temperature	-40 ... +90	°C
Climatic category (IEC 60068-1)	40/ 90/ 21	
Marking, blue	**EPCOS** **230 YY O** 230 - Nominal voltage YY - Year of production O - Non radioactive	

1) At delivery AQL 0.65 level II, DIN ISO 2859
2) In ionized mode
3) Tip or ring electrode to center electrode
4) Tip to ring electrode
5) Total current through center electrode, half value through tip respectively ring electrode
6) Total current through center electrode, same value through tip respectively ring electrode
7) Total current from ring to tip electrode
8) Test in accordance with ITU-Rec. K.12

Terms in accordance with ITU-T Rec. K.12 and DIN 57845/VDE 0845

Arrester fail safe works at temperatures > 260 °C. The arrester has to be fixed mechanically, if the arrester is contacted by soldering and if the solder temperature is less than 260 °C.

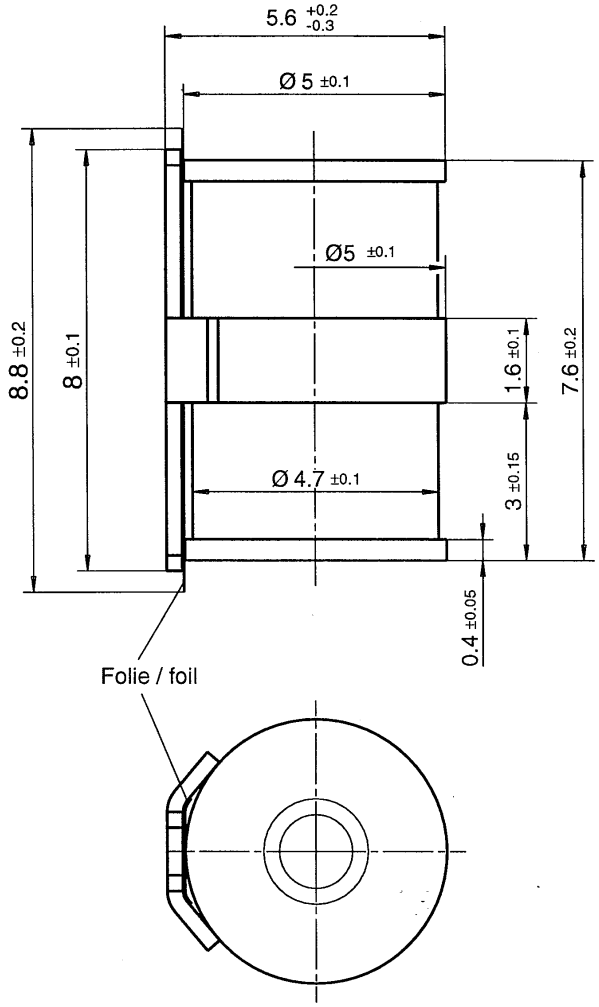

Not to scale

Dimensions in mm

Non controlled document

© EPCOS AG 2002. Reproduction, publication and dissemination of this data sheet, enclosures hereto and the information contained therein without EPCOS' prior express consent is prohibited.

Purchase orders are subject to the General Conditions for the Supply of Products and Services of the Electrical and Electronics Industry recommended by the ZVEI (German Electrical and Electronic Manufacturers' Association), unless otherwise agreed.