8-bit MCU with 32K bytes Flash, 10 bits A/D and EEPROM

1. Description

The T89C51AC2 is a high performance CMOS FLASH version of the 80C51 CMOS single chip 8-bit microcontrollers. It contains a 32Kbytes Flash memory block for program and data.

The 16K bytes or 32K bytes FLASH memory can be programmed either in parallel mode or in serial mode with the ISP capability or with software. The programming voltage is internally generated from the standard V_{CC} pin.

The T89C51AC2 retains all features of the 80C52 with 256 bytes of internal RAM, a 7-source 4-level interrupt controller and three timer/counters.

In addition, the T89C51AC2 has a 10 bits A/D converter, a 2Kbytes Boot Flash Memory, 2 Kbytes EEPROM for data, a Programmable Counter Array, an XRAM of 1024 byte, a Hardware Watchdog Timer and a more versatile serial channel that facilitates multiprocessor communication (EUART).

The fully static design of the T89C51AC2 allows to reduce system power consumption by bringing the clock frequency down to any value, even DC, without loss of data.

The T89C51AC2 has 2 software-selectable modes of reduced activity and 8 bit clock prescaler for further reduction in power consumption. In the Idle mode the CPU is frozen while the peripherals and the interrupt system are still operating. In the power-down mode the RAM is saved and all other functions are inoperative.

The added features of the T89C51AC2 make it more powerful for applications that need A/D conversion, pulse width modulation, high speed I/O and counting capabilities such as industrial control, consumer goods, alarms, motor control, ...

While remaining fully compatible with the 80C51 it offers a superset of this standard microcontroller. In X2 mode a maximum external clock rate of 20 MHz reaches a 300 ns cycle time.

2. Features

- 80C51 core architecture:
  - 256 bytes of on-chip RAM
  - 1Kbytes of on-chip XRAM
  - 32 Kbytes of on-chip Flash memory
  - 2 Kbytes of on-chip Flash for Bootloader
  - 2 Kbytes of on-chip EEPROM
  - 14-source 4-level interrupt
  - Three 16-bit timer/counter
  - Full duplex UART compatible 80C51
  - maximum crystal frequency 40 MHz. In X2 mode, 20 MHz (CPU core, 40 MHz)
  - Five ports: 32 + 2 digital I/O lines
  - Five channel 16-bit PCA with:
    - PWM (8-bit)
    - High-speed output
    - Timer and edge capture
  - Double Data Pointer
  - 21 bit watchdog timer (including 7 programmable bits)
- A 10-bit resolution analog to digital converter (ADC) with 8 multiplexed inputs
  - 20 microsecond conversion time
  - Two conversion modes
- On-chip emulation Logic (enhanced Hook system)
- Power saving modes:
  - Idle mode
  - Power down mode
- Power supply: 5V +/- 10% (or 3V** +/- 10%)
- Temperature range: Industrial (-40 to +85C)
- Packages: TQFP44, PLCC44

3. Block Diagram

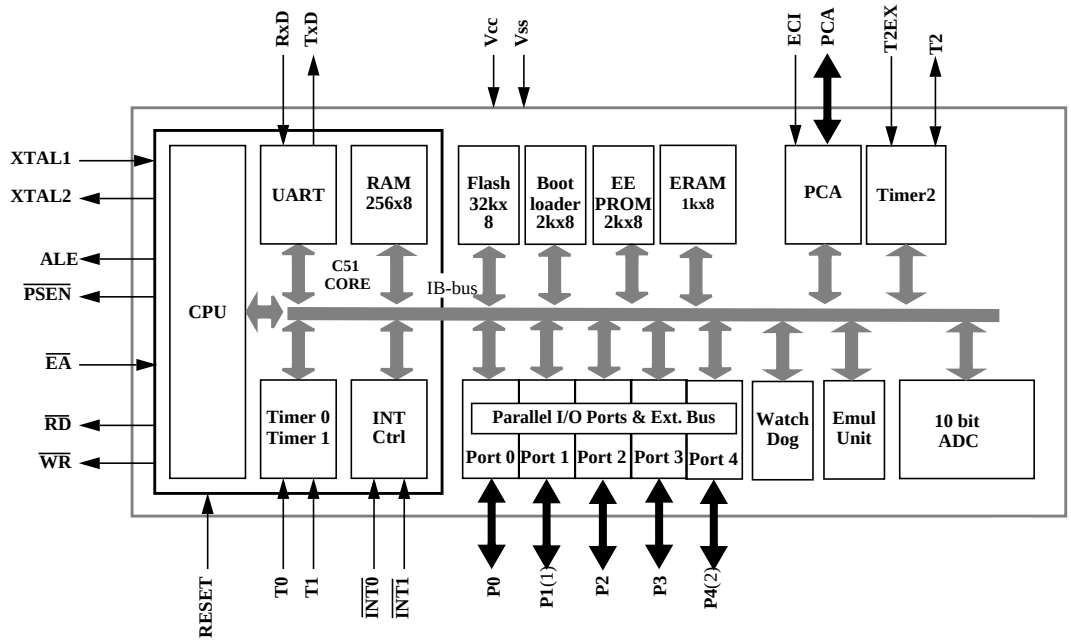

(1): 8 analog Inputs / 8 Digital I/O
(2): 2-Bit I/O Port

4. Pin Configuration

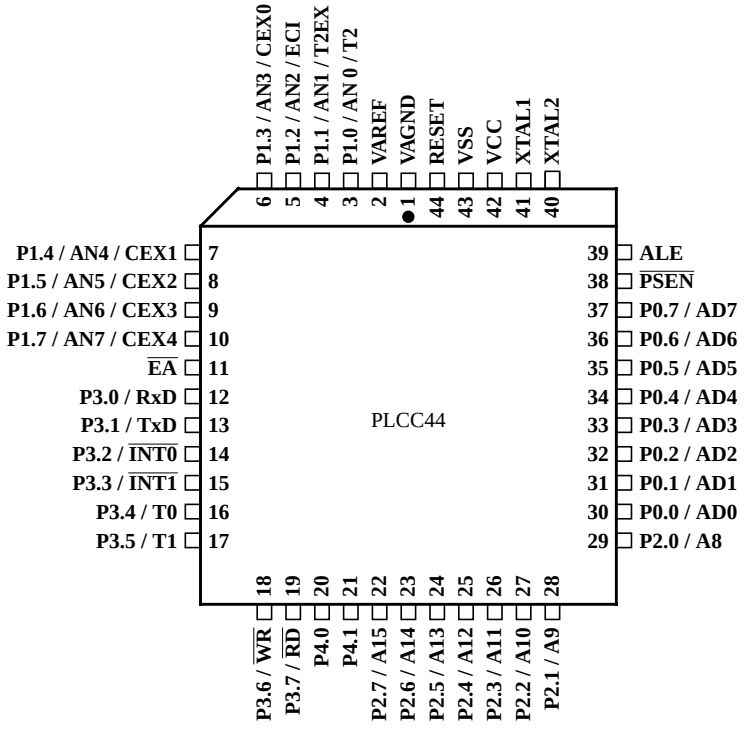

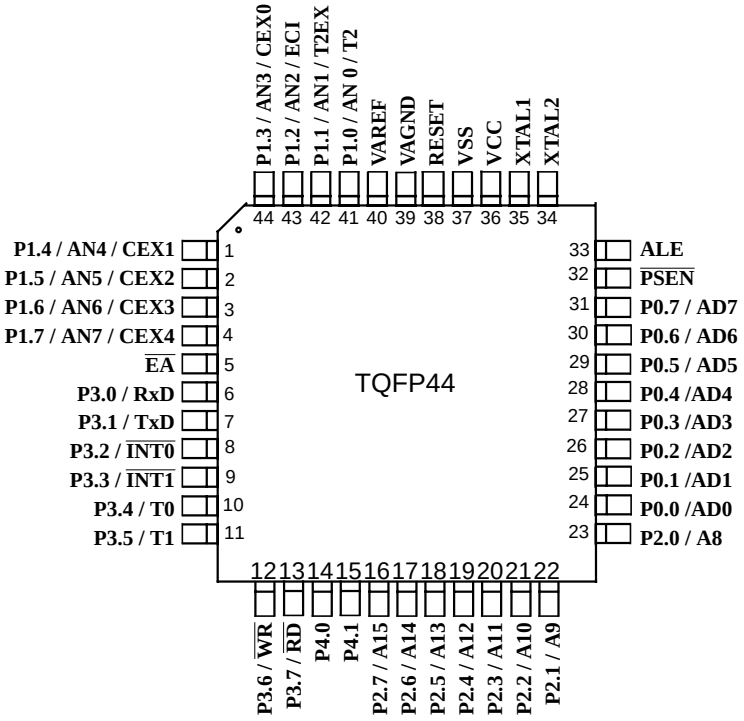

Preview - Confidential

Table 1. Pin Description

Pin Name	Type	Description
VSS	GND	**Circuit ground potential**.
VCC		**Supply voltage during normal, idle, and power-down operation.**
VAREF		**Reference Voltage for ADC**
VAGND		**Reference Ground for ADC**
P0.0:7	I/O	**Port 0:** is an 8-bit open drain bi-directional I/O port. Port 0 pins that have 1's written to them float, and in this state can be used as high-impedance inputs. Port 0 is also the multiplexed low-order address and data bus during accesses to external Program and Data Memory. In this application it uses strong internal pull-ups when emitting 1's. Port 0 also outputs the code bytes during program validation. External pull-ups are required during program verification. In the T89C51AC2 Port 0 can sink or source 5mA. It can drive CMOS inputs without external pull-ups.
P1.0:7	I/O	**Port 1:** is an 8-bit bi-directional I/O port with internal pull-ups. Port 1 pins can be used for digital input/output or as analog inputs for the Analog Digital Converter (ADC). Port 1 pins that have 1's written to them are pulled high by the internal pull-up transistors and can be used as inputs in this state. As inputs, Port 1 pins that are being pulled low externally will be the source of current (IIL, on the datasheet) because of the internal pull-ups. Port 1 pins are assigned to be used as analog inputs via the ADCCF register. As a secondary digital function, port 1 contains the Timer 2 external trigger and clock input; the PCA external clock input and the PCA module I/O. P1.0 / AN0 / T2 Analog input channel 0, External clock input for Timer/counter2. P1.1 / AN1 / T2EX Analog input channel 1, Trigger input for Timer/counter2. P1.2 / AN2 / ECI Analog input channel 2, PCA external clock input. P1.3 / AN3 / CEX0 Analog input channel 3, PCA module 0 Entry of input/PWM output. P1.4 / AN4 / CEX1 Analog input channel 4, PCA module 1 Entry of input/PWM output. P1.5 / AN5 / CEX2 Analog input channel 5, PCA module 2 Entry of input/PWM output. P1.6 / AN6 / CEX3 Analog input channel 6, PCA module 3 Entry of input/PWM output. P1.7 / AN7 / CEX4 Analog input channel 7, PCA module 4 Entry ot input/PWM output. Port 1 receives the low-order address byte during EPROM programming and program verification. In the T89C51AC2 Port 1 can sink or source 5mA. It can drive CMOS inputs without external pull-ups.
P2.0:7	I/O	**Port 2:** Is an 8-bit bi-directional I/O port with internal pull-ups. Port 2 pins that have 1's written to them are pulled high by the internal pull-ups and can be used as inputs in this state. As inputs, Port 2 pins that are being pulled low externally will be a source of current (IIL, on the datasheet) because of the internal pull-ups. Port 2 emits the high-order address byte during accesses to the external Program Memory and during accesses to external Data Memory that uses 16-bit addresses (MOVX @DPTR). In this application, it uses strong internal pullups when emitting 1's. During accesses to external Data Memory that use 8 bit addresses (MOVX @Ri), Port 2 transmits the contents of the P2 special function register. It also receives high-order addresses and control signals during program validation. In the T89C51AC2 Port 2 can sink or source 5mA. It can drive CMOS inputs without external pull-ups.

Pin Name	Type	Description
P3.0:7	I/O	**Port 3:** Is an 8-bit bi-directional I/O port with internal pull-ups. Port 3 pins that have 1's written to them are pulled high by the internal pull-up transistors and can be used as inputs in this state. As inputs, Port 3 pins that are being pulled low externally will be a source of current (IIL, on the datasheet) because of the internal pull-ups. The output latch corresponding to a secondary function must be programmed to one for that function to operate (except for TxD and $\overline{WR}$). The secondary functions are assigned to the pins of port 3 as follows: P3.0 / RxD: Receiver data input (asynchronous) or data input/output (synchronous) of the serial interface P3.1 / TxD: Transmitter data output (asynchronous) or clock output (synchronous) of the serial interface P3.2 / $\overline{INT0}$: External interrupt 0 input / timer 0 gate control input P3.3 / $\overline{INT1}$: External interrupt 1 input / timer 1 gate control input P3.4 / T0: Timer 0 counter input P3.5 / T1: Timer 1 counter input P3.6 / $\overline{WR}$: External Data Memory write strobe; latches the data byte from port 0 into the external data memory P3.7 / $\overline{RD}$: External Data Memory read strobe; Enables the external data memory. In the T89C51AC2 Port 3 can sink or source 5mA. It can drive CMOS inputs without external pull-ups.
P4.0:1	I/O	**Port 4:** Is an 2-bit bi-directional I/O port with internal pull-ups. Port 4 pins that have 1's written to them are pulled high by the internal pull-ups and can be used as inputs in this state. As inputs, Port 4 pins that are being pulled low externally will be a source of current (IIL, on the datasheet) because of the internal pull-up transistor. In the T89C51AC2 Port 3 can sink or source 5mA. It can drive CMOS inputs without external pull-ups.
RESET	I/O	**Reset:** A high level on this pin during two machine cycles while the oscillator is running resets the device. An internal pull-down resistor to VSS permits power-on reset using only an external capacitor to VCC.
ALE	O	**ALE:** An Address Latch Enable output for latching the low byte of the address during accesses to the external memory. The ALE is activated every 1/6 oscillator periods (1/3 in X2 mode) except during an external data memory access. When instructions are executed from an internal FLASH ($\overline{EA}$ = 1), ALE generation can be disabled by the software.
PSEN	O	**$\overline{PSEN}$:** The Program Store Enable output is a control signal that enables the external program memory of the bus during external fetch operations. It is activated twice each machine cycle during fetches from the external program memory. (However, when executing outside of the external program memory two activations of PSEN are skipped during each access to the external Data memory). The PSEN is not activated during fetches from the internal data memory.
EA	I	**$\overline{EA}$:** When External Access is held at the high level, instructions are fetched from the internal FLASH when the program counter is less then 8000H. When held at the low level, CANARY fetches all instructions from the external program memory.
XTAL1	I	**XTAL1:** Input of the inverting oscillator amplifier and input of the internal clock generator circuits. To drive the device from an external clock source, XTAL1 should be driven, while XTAL2 is left unconnected. To operate above a frequency of 16 MHz, a duty cycle of 50% should be maintained.
XTAL2	O	**XTAL2:** Output from the inverting oscillator amplifier.

4.1. I/O Configurations

Each Port SFR operates via type-D latches, as illustrated in Figure 1 for Ports 3 and 4. A CPU "write to latch" signal initiates transfer of internal bus data into the type-D latch. A CPU "read latch" signal transfers the latched Q uotput onto the internal bus. Similarly, a "read pin" signal transfers the logical level of the Port pin. Some Port data instructions activate the "read latch" signal while others activate the "read pin" signal. Latch instructions are referred to as Read-Modify-Write instructions. Each I/O line may be independently programmed as input or output.

4.2. Port 1, Port 3 and Port 4

Figure 1 shows the structure of Ports 1 and 3, which have internal pull-ups. An external source can pull the pin low. Each Port pin can be configured either forgeneral-purpose I/O or for its alternate input output function.

To use a pin for general-purpose output, set or clear the corresponding bit in the Px register (x=1,3 or 4). To use a pin for general purpose input, set the bit in the Px register. This turns off the output FET drive.

To configure a pin for its alternate function, set the bit in the Px register. When the latch is set, the "alternate output function" signal controls the output level (see Figure 1). The operation of Ports 1, 3 and 4 is discussed further in "quasi-Bidirectional Port Operation" paragraph.

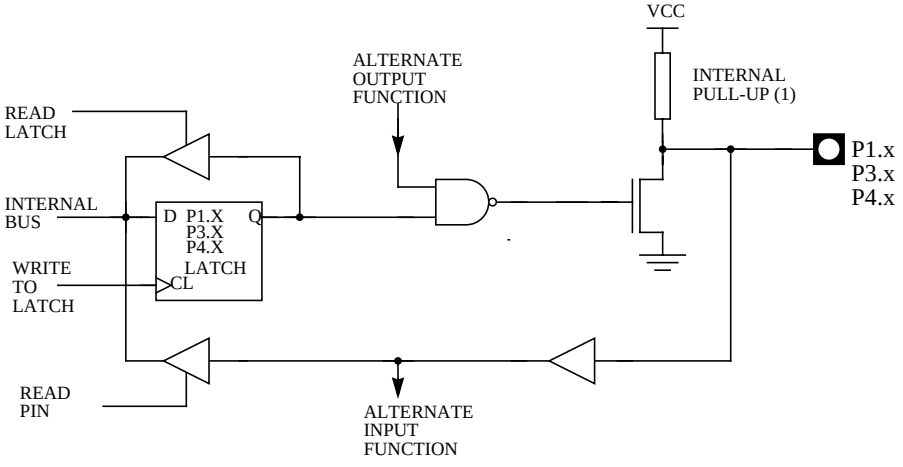

NOTE:

1. The internal pull-up can be disabled on P1 when analog function is selected.

Figure 1. Port 1, Port 3 and Port 4 Structure

4.3. Port 0 and Port2

Ports 0 and 2 are used for general-purpose I/O or as the external address/data bus. Port 0, shown in Figure 2, differs from the other Ports in not having internal pull-ups. Figure 3 shows the structure of Port 2. An external source can pull a Port 2 pin low.

To use a pin for general-purpose output, set or clear the corresponding bit in the Px register (x=0 or 2). To use a pin for general purpose input, set the bit in the Px register to turn off the output driver FET.

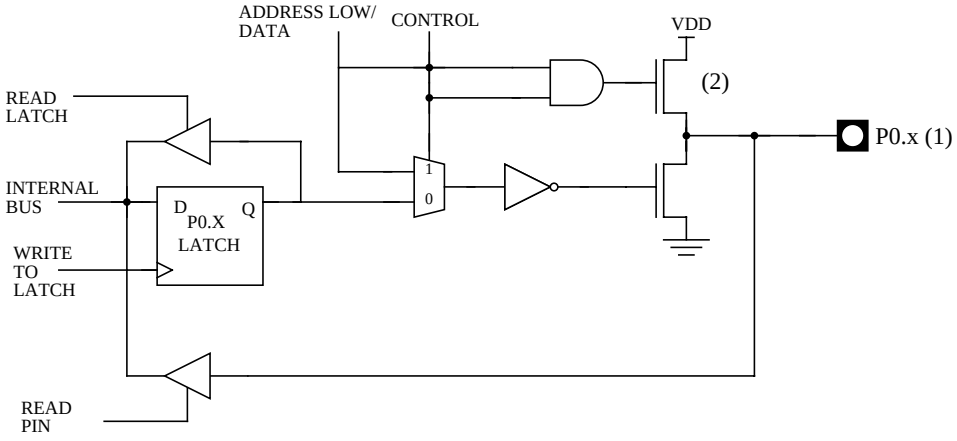

NOTE:

1. *Port 0 is precluded from use as general purpose I/O Ports when used as address/data bus drivers.*
2. *Port 0 internal strong pull-ups assist the logic-one output for memory bus cycles only. Except for these bus cycles, the pull-up FET is off, Port 0 outputs are open-drain.*

Figure 2. Port 0 Structure

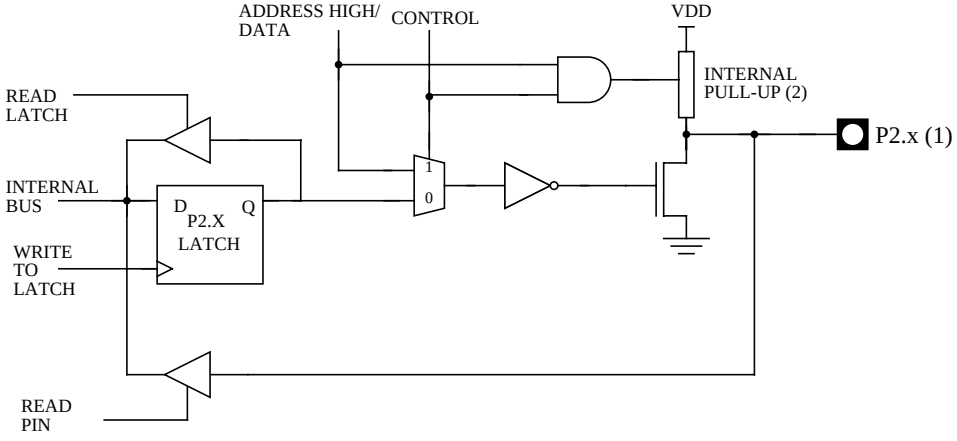

NOTE:

1. *Port 2 is precluded from use as general purpose I/O Ports when as address/data bus drivers.*
2. *Port 2 internal strong pull-ups FET (P1 in FiGURE) assist the logic-one output for memory bus cyle.*

Figure 3. Port 2 Structure

When Port 0 and Port 2 are used for an external memory cycle, an internal control signal switches the output-driver input from the latch output to the internal address/data line.

4.4. Read-Modify-Write Instructions

Some instructions read the latch data rather than the pin data. The latch based instructions read the data, modify the data and then rewrite the latch. These are called "Read-Modifiy-Write" instructions. Below is a complete list of these special instructions (see Table 2). When the destination operand is a Port or a Port bit, these instructions read the latch rather than the pin:

Table 2. Read-Modify-Write Instructions

Instruction	Description	Example
ANL	logical AND	ANL P1, A
ORL	logical OR	ORL P2, A
XRL	logical EX-OR	XRL P3, A
JBC	jump if bit = 1 and clear bit	JBC P1.1, LABEL
CPL	complement bit	CPL P3.0
INC	increment	INC P2
DEC	decrement	DEC P2
DJNZ	decrement and jump if not zero	DJNZ P3, LABEL
MOV Px.y, C	move carry bit to bit y of Port x	MOV P1.5, C
CLR Px.y	clear bit y of Port x	CLR P2.4
SET Px.y	set bit y of Port x	SET P3.3

It is not obvious the last three instructions in this list are Read-Modify-Write instructions. These instructions read the port (all 8 bits), modify the specifically addressed bit and write the new byte back to the latch. These Read-Modify-Write instructions are directed to the latch rather than the pin in order to avoid possible misinterpretation of voltage (and therefore, logic)levels at the pin. For example, a Port bit used to drive the base of an external bipolar transistor can not rise above the transistor's base-emitter junction voltage (a value lower than VIL). With a logic one written to the bit, attemps by the CPU to read the Port at the pin are misinterpreted as logic zero. A read of the latch rather than the pins returns the correct logic-one value.

4.5. Quasi-Bidirectional Port Operation

Port 1, Port 2, Port 3 and Port 4 have fixed internal pull-ups and are referred to as "quasi-bidirectional" Ports. When configured as an input, the pin impedance appears as logic one and sources current in response to an external logic zero condition. Port 0 is a "true bidirectional" pin. The pins float when configured as input. Resets write logic one to all Port latches. If logical zero is subsequently written to a Port latch, it can be returned to input condions by a logical one written to the latch.

NOTE:

Port latch values change near the end of Read-Modify-Write insruction cycles. Output buffers (and therefore the pin state) update early in the instruction after Read-Modify-Write instruction cycle.

Logical zero-to-one transitions in Port 1, Port 2, Port 3 and Port 4 use an additional pull-up (p1) to aid this logic transition (see Figure 4.). This increases switch speed. This extra pull-up sources 100 times normal internal circuit current during 2 oscillator clock periods. The internal pull-ups are field-effect transistors rather than linear resistors. Pull-ups consist of three p-channel FET (pFET) devices. A pFET is on when the gate senses logical zero and off when the gate senses logical one. pFET #1 is turned on for two oscillator periods immediately after a zero-to-one transition in the Port latch. A logical one at the Port pin turns on pFET #3 (a weak pull-up) through the inverter. This inverter and pFET pair form a latch to drive logical one. pFET #2 is a very weak pull-up switched on whenever the associated nFET is switched off. This is traditional CMOS switch convention. Current strengths are 1/10 that of pFET #3.

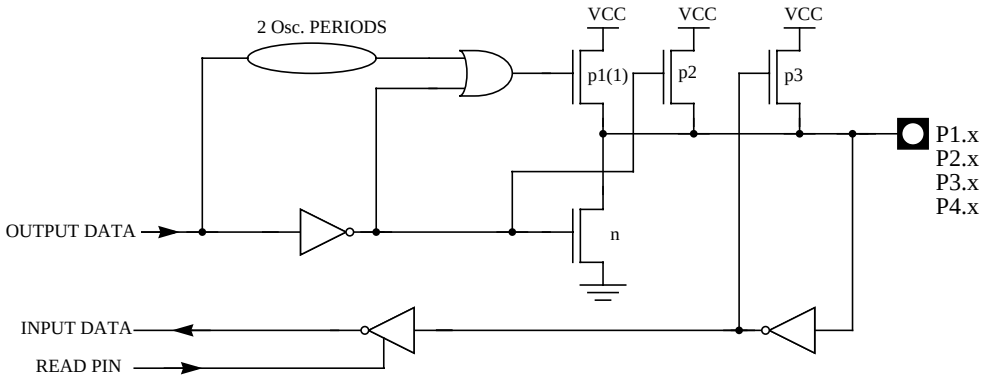

NOTE:

1. Port 2 p1 assists the logic-one output for memory bus cycles.

Figure 4. Internal Pull-Up Configurations

5. SFR Mapping

The Special Function Registers (SFRs) of the T89C51AC2 fall into the following categories:

Table 3. C51 Core SFRs

Mnemonic	Add	Name	7	6	5	4	3	2	1	0
ACC	E0h	Accumulator								
B	F0h	B Register								
PSW	D0h	Program Status Word								
SP	81h	Stack Pointer LSB of SPX								
DPL	82h	Data Pointer Low byte LSB of DPTR								
DPH	83h	Data Pointer High byte MSB of DPTR								

Table 4. I/O Port SFRs

Mnemonic	Add	Name	7	6	5	4	3	2	1	0
P0	80h	Port 0								
P1	90h	Port 1								
P2	A0h	Port 2								
P3	B0h	Port 3								
P4	C0h	Port 4 (x2)								

Table 5. Timers SFRs

Mnemonic	Add	Name	7	6	5	4	3	2	1	0
TH0	8Ch	Timer/Counter 0 High byte								
TL0	8Ah	Timer/Counter 0 Low byte								
TH1	8Dh	Timer/Counter 1 High byte								
TL1	8Bh	Timer/Counter 1 Low byte								
TH2	CDh	Timer/Counter 2 High byte								
TL2	CCh	Timer/Counter 2 Low byte								
TCON	88h	Timer/Counter 0 and 1 control	TF1	TR1	TF0	TR0	IE1	IT1	IE0	IT0
TMOD	89h	Timer/Counter 0 and 1 Modes	GATE1	C/T1#	M11	M01	GATE0	C/T0#	M10	M00
T2CON	C8h	Timer/Counter 2 control	TF2	EXF2	RCLK	TCLK	EXEN2	TR2	C/T2#	CP/RL2#
T2MOD	C9h	Timer/Counter 2 Mode	-	-	-	-	-	-	T2OE	DCEN
RCAP2H	CBh	Timer/Counter 2 Reload/Capture High byte								
RCAP2L	CAh	Timer/Counter 2 Reload/Capture Low byte								
WDTRST	A6h	WatchDog Timer Reset								
WDTPRG	A7h	WatchDog Timer Program	-	-	-	-	-	S2	S1	S0

Table 6. Serial I/O Port SFRs

Mnemonic	Add	Name	7	6	5	4	3	2	1	0
SCON	98h	Serial Control	FE/SM0	SM1	SM2	REN	TB8	RB8	TI	RI
SBUF	99h	Serial Data Buffer								
SADEN	B9h	Slave Address Mask								

Mnemonic	Add	Name	7	6	5	4	3	2	1	0
SADDR	A9h	Slave Address								

Table 7. PCA SFRs

Mnemonic	Add	Name	7	6	5	4	3	2	1	0
CCON	D8h	PCA Timer/Counter Control	CF	CR	-	CCF4	CCF3	CCF2	CCF1	CCF0
CMOD	D9h	PCA Timer/Counter Mode	CIDL	WDTE	-	-	-	CPS1	CPS0	ECF
CL	E9h	PCA Timer/Counter Low byte								
CH	F9h	PCA Timer/Counter High byte								
CCAPM0	DAh	PCA Timer/Counter Mode 0		ECOM0	CAPP0	CAP0	MAT0	TOG0	PWM0	ECCF0
CCAPM1	DBh	PCA Timer/Counter Mode 1		ECOM1	CAPP1	CAP1	MAT1	TOG1	PWM1	ECCF1
CCAPM2	DCh	PCA Timer/Counter Mode 2	-	ECOM2	CAPP2	CAP2	MAT2	TOG2	PWM2	ECCF2
CCAPM3	DDh	PCA Timer/Counter Mode 3		ECOM3	CAPP3	CAP3	MAT3	TOG3	PWM3	ECCF3
CCAPM4	DEh	PCA Timer/Counter Mode 4		ECOM4	CAPP4	CAP4	MAT4	TOG4	PWM4	ECCF4
CCAP0H	FAh	PCA Compare Capture Module 0 H	CCAP0H7	CCAP0H6	CCAP0H5	CCAP0H4	CCAP0H3	CCAP0H2	CCAP0H1	CCAP0H0
CCAP1H	FBh	PCA Compare Capture Module 1 H	CCAP1H7	CCAP1H6	CCAP1H5	CCAP1H4	CCAP1H3	CCAP1H2	CCAP1H1	CCAP1H0
CCAP2H	FCh	PCA Compare Capture Module 2 H	CCAP2H7	CCAP2H6	CCAP2H5	CCAP2H4	CCAP2H3	CCAP2H2	CCAP2H1	CCAP2H0
CCAP3H	FDh	PCA Compare Capture Module 3 H	CCAP3H7	CCAP3H6	CCAP3H5	CCAP3H4	CCAP3H3	CCAP3H2	CCAP3H1	CCAP3H0
CCAP4H	FEh	PCA Compare Capture Module 4 H	CCAP4H7	CCAP4H6	CCAP4H5	CCAP4H4	CCAP4H3	CCAP4H2	CCAP4H1	CCAP4H0
CCAP0L	EAh	PCA Compare Capture Module 0 L	CCAP0L7	CCAP0L6	CCAP0L5	CCAP0L4	CCAP0L3	CCAP0L2	CCAP0L1	CCAP0L0
CCAP1L	EBh	PCA Compare Capture Module 1 L	CCAP1L7	CCAP1L6	CCAP1L5	CCAP1L4	CCAP1L3	CCAP1L2	CCAP1L1	CCAP1L0
CCAP2L	ECh	PCA Compare Capture Module 2 L	CCAP2L7	CCAP2L6	CCAP2L5	CCAP2L4	CCAP2L3	CCAP2L2	CCAP2L1	CCAP2L0
CCAP3L	EDh	PCA Compare Capture Module 3 L	CCAP3L7	CCAP3L6	CCAP3L5	CCAP3L4	CCAP3L3	CCAP3L2	CCAP3L1	CCAP3L0
CCAP4L	EEh	PCA Compare Capture Module 4 L	CCAP4L7	CCAP4L6	CCAP4L5	CCAP4L4	CCAP4L3	CCAP4L2	CCAP4L1	CCAP4L0

Table 8. Interrupt SFRs

Mnemonic	Add	Name	7	6	5	4	3	2	1	0
IEN0	A8h	Interrupt Enable Control 0	EA	AC	ET2	ES	ET1	EX1	ET0	EX0
IEN1	E8h	Interrupt Enable Control 1	-	-	-	-	-	-	EADC	-
IPL0	B8h	Interrupt Priority Control Low 0	-	PPC	PT2	PS	PT1	PX1	PT0	PX0
IPH0	B7h	Interrupt Priority Control High 0	-	PPCH	PT2H	PSH	PT1H	PX1H	PT0H	PX0H
IPL1	F8h	Interrupt Priority Control Low 1	-	-	-	-	-	-	PADCL	-
IPH1	F7h	Interrupt Priority Control High1	-	-	-	-	-	-	PADCH	-

Table 9. ADC SFRs

Mnemonic	Add	Name	7	6	5	4	3	2	1	0
ADCON	F3h	ADC Control	-	PSIDLE	ADEN	ADEOC	ADSST	SCH2	SCH1	SCH0
ADCF	F6h	ADC Configuration	CH7	CH6	CH5	CH4	CH3	CH2	CH1	CH0
ADCLK	F2h	ADC Clock	-	-	-	PRS4	PRS3	PRS2	PRS1	PRS0
ADDH	F5h	ADC Data High byte	ADAT9	ADAT8	ADAT7	ADAT6	ADAT5	ADAT4	ADAT3	ADAT2
ADDL	F4h	ADC Data Low byte	-	-	-	-	-	-	ADAT1	ADAT0

Table 10. Other SFRs

Mnemonic	Add	Name	7	6	5	4	3	2	1	0
PCON	87hh	Power Control	SMOD1	SMOD0	-	POF	GF1	GF0	PD	IDL
AUXR	8Eh	Auxiliary Register 0	-	M(1)	M0	-	XRS1	XRS2	EXTRAM	A0
AUXR1	A2h	Auxiliary Register 1	-	-	ENBOOT	-	GF3	-	-	DPS
CKCON	8Fh	Clock Control	-	WDX2	PCAX2	SIX2	T2X2	T1X2	T0X2	X2
FCON	D1h	FLASH Control	FPL3	FPL2	FPL1	FPL0	FPS	FMOD1	FMOD0	FBUSY
EECON	D2h	EEPROM Contol	EEPL3	EEPL2	EEPL1	EEPL0	-	-	EEE	EEBUSY

Table 11. SFR's mapping

	0/8[1]	1/9	2/A	3/B	4/C	5/D	6/E	7/F	
F8h	**IPL1 xxxx x000**	CH 0000 0000	CCAP0H 0000 0000	CCAP1H 0000 0000	CCAP2H 0000 0000	CCAP3H 0000 0000	CCAP4H 0000 0000		FFh
F0h	**B 0000 0000**		ADCLK xx00 0000	ADCON x000 0000	ADDL 0000 0000	ADDH 0000 0000	ADCF 0000 0000	IPH1 **xxxx x000**	F7h
E8h	**IEN1 xxxx x000**	CL 0000 0000	CCAP0L 0000 0000	CCAP1L 0000 0000	CCAP2L 0000 0000	CCAP3L 0000 0000	CCAP4L 0000 0000		EFh
E0h	**ACC 0000 0000**								E7h
D8h	**CCON 00xx xx00**	CMOD 00xx x000	CCAPM0 x000 0000	CCAPM1 x000 0000	CCAPM2 x000 0000	CCAPM3 x000 0000	CCAPM4 x000 0000		DFh
D0h	**PSW 0000 0000**	FCON 0000 0000	EECON xxxx xx00						D7h
C8h	**T2CON** 0000 0000	T2MOD xxxx xx00	RCAP2L 0000 0000	RCAP2H 0000 0000	TL2 0000 0000	TH2 0000 0000	CANEN1 xx00 0000	CANEN2 0000 0000	CFh
C0h	**P4 xxxx xx11**								C7h
B8h	**IPL0 x000 0000**	SADEN 0000 0000							BFh
B0h	**P3 1111 1111**							IPH0 x000 0000	B7h
A8h	**IEN0 0000 0000**	SADDR 0000 0000							AFh
A0h	**P2 1111 1111**		AUXR1 0000 0000				WDTRST 1111 1111	WDTPRG xxxx x000	A7h
98h	**SCON 0000 0000**	SBUF 0000 0000							9Fh
90h	**P1 1111 1111**								97h
88h	**TCON 0000 0000**	TMOD 0000 0000	TL0 0000 0000	TL1 0000 0000	TH0 0000 0000	TH1 0000 0000	AUXR 0000 1000	CKCON 0000 0000	8Fh
80h	**P0 1111 1111**	SP 0000 0111	DPL 0000 0000	DPH 0000 0000				PCON 0000 0000	87h
	0/8[1]	1/9	2/A	3/B	4/C	5/D	6/E	7/F	

Note:

2. These registers are bit-addressable.
Sixteen addresses in the SFR space are both byte-addressable and bit-addressable. The bit-addressable SFR's are those whose address ends in 0 and 8. The bit addresses, in this area, are 0x80 through to 0xFF.

6. Clock

6.1. Introduction

The T89C51AC2 core needs only 6 clock periods per machine cycle. This feature, called ”X2”, provides the following advantages:

- Divides frequency crystals by 2 (cheaper crystals) while keeping the same CPU power.
- Saves power consumption while keeping the same CPU power (oscillator power saving).
- Saves power consumption by dividing dynamic operating frequency by 2 in operating and idle modes.
- Increases CPU power by 2 while keeping the same crystal frequency.

In order to keep the original C51 compatibility, a divider-by-2 is inserted between the XTAL1 signal and the main clock input of the core (phase generator). This divider may be disabled by the software.

An extra feature is available for selected hardware in the X2 mode. This feature allows starting of the CPU in the X2 mode, without starting in the standard mode.

The hardware CPU X2 mode can be read and write via IAP (SetX2mode, ClearX2mode, ReadX2mode), see In-System Programming section.

These IAPs are detailed in the "In-System Programming" section.

6.2. Description

The clock for the whole circuit and peripheral is first divided by two before being used by the CPU core and peripherals. This allows any cyclic ratio to be accepted on the XTAL1 input. In X2 mode, as this divider is bypassed, the signals on XTAL1 must have a cyclic ratio between 40 to 60%. Figure 5. shows the clock generation block diagram. The X2 bit is validated on the XTAL1÷2 rising edge to avoid glitches when switching from the X2 to the STD mode. Figure 6 shows the mode switching waveforms.

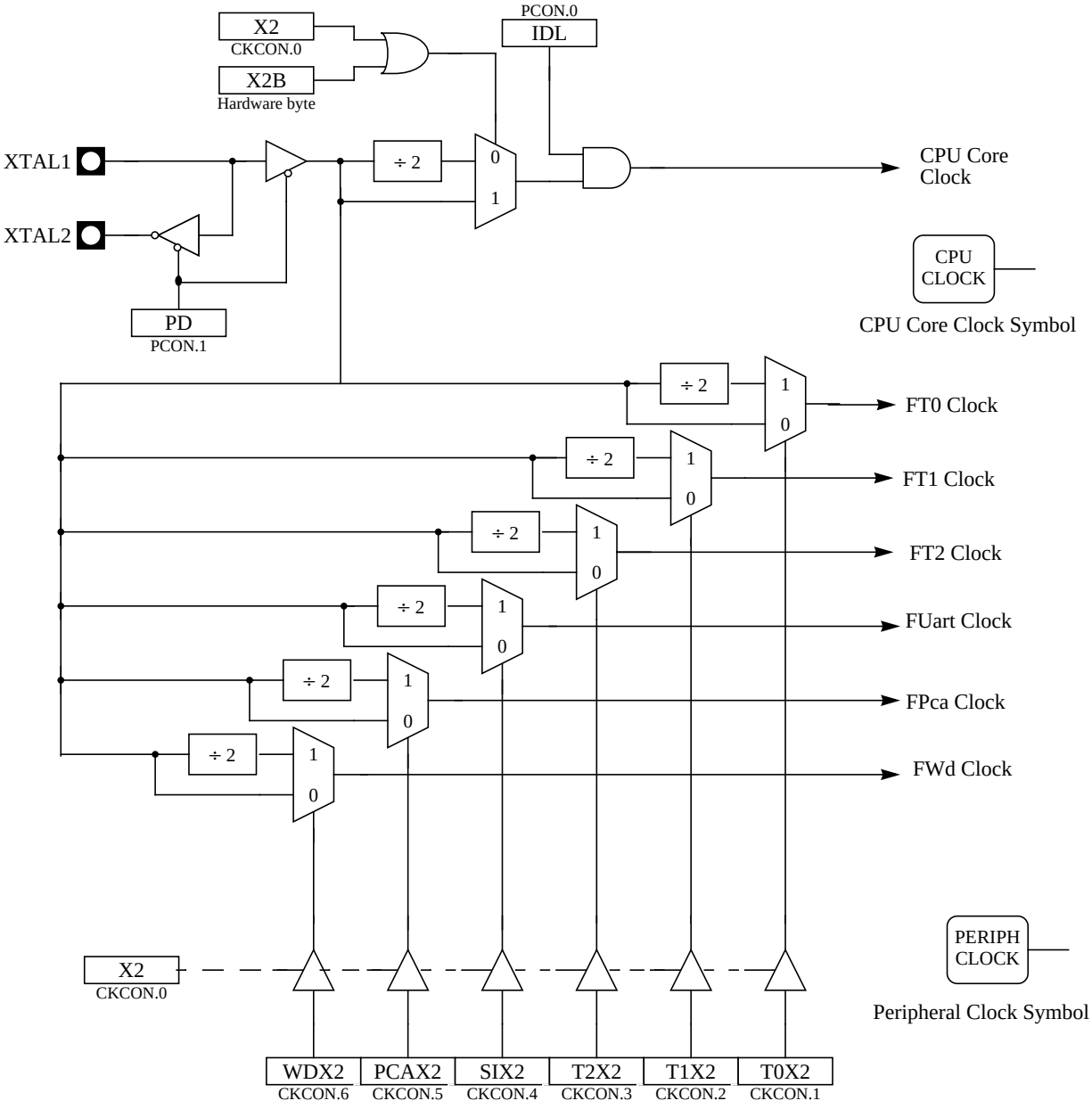

Figure 5. Clock CPU Generation Diagram

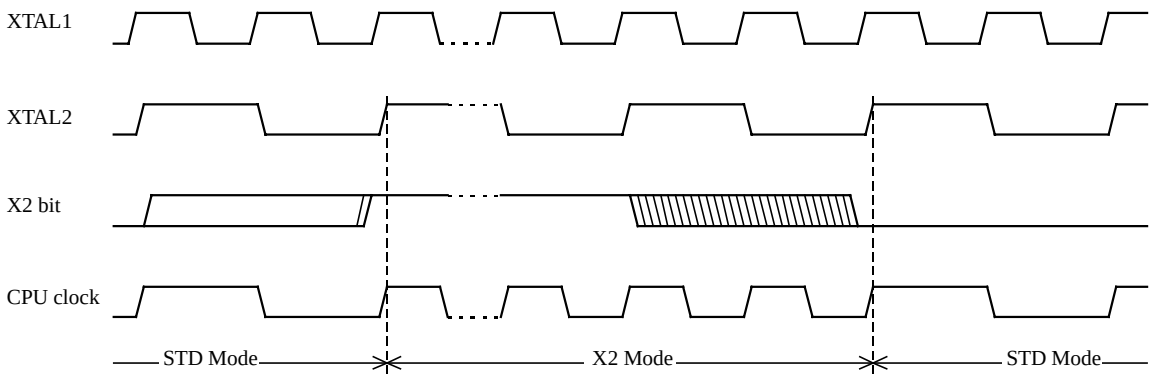

Figure 6. Mode Switching Waveforms

The X2 bit in the CKCON register (See Table 7) allows switching from 12 clock cycles per instruction to 6 clock cycles and vice versa. At reset, the standard speed is activated (STD mode). Setting this bit activates the X2 feature (X2 mode).

CAUTION

In order to prevent any incorrect operation while operating in the X2 mode, users must be aware that all peripherals using the clock frequency as a time reference (UART, timers...) will have their time reference divided by two. For example a free running timer generating an interrupt every 20 ms will then generate an interrupt every 10 ms. A UART with a 4800 baud rate will have a 9600 baud rate.

6.3. Register

CKCON (S:8Fh)
Clock Control Register

7	6	5	4	3	2	1	0
-	WDX2	PCAX2	SIX2	T2X2	T1X2	T0X2	X2

Bit Number	Bit Mnemonic	Description
7	-	**Reserved** The value read from this bit is indeterminate. Do not set this bit.
6	WDX2	**Watchdog clock (1)** Clear to select 6 clock periods per peripheral clock cycle. Set to select 12 clock periods per peripheral clock cycle.
5	PCAX2	**Programmable Counter Array clock (1)** Clear to select 6 clock periods per peripheral clock cycle. Set to select 12 clock periods per peripheral clock cycle.
4	SIX2	**Enhanced UART clock (MODE 0 and 2) (1)** Clear to select 6 clock periods per peripheral clock cycle. Set to select 12 clock periods per peripheral clock cycle.
3	T2X2	**Timer2 clock (1)** Clear to select 6 clock periods per peripheral clock cycle. Set to select 12 clock periods per peripheral clock cycle.
2	T1X2	**Timer1 clock (1)** Clear to select 6 clock periods per peripheral clock cycle. Set to select 12 clock periods per peripheral clock cycle.
1	T0X2	**Timer0 clock (1)** Clear to select 6 clock periods per peripheral clock cycle. Set to select 12 clock periods per peripheral clock cycle.
0	X2	**CPU clock** Clear to select 12 clock periods per machine cycle (STD mode) for CPU and all the peripherals. Set to select 6 clock periods per machine cycle (X2 mode) and to enable the individual peripherals "X2"bits.

NOTE:
1. This control bit is validated when the CPU clock bit X2 is set; when X2 is low, this bit has no effect.

Reset Value = 0000 0000b

Figure 7. CKCON Register

7. Program/Code Memory

7.1. Introduction

The T89C51AC2 implement 32 Kbytes of on-chip program/code memory. Figure 8 shows the split of internal and external program/code memory spaces depending on the product.

The FLASH memory increases EPROM and ROM functionality by in-circuit electrical erasure and programming. Thanks to the internal charge pump, the high voltage needed for programming or erasing FLASH cells is generated on-chip using the standard VDD voltage. Thus, the FLASH Memory can be programmed using only one voltage and allows in application software programming commonly known as IAP. Hardware programming mode is also available using specific programming tool.

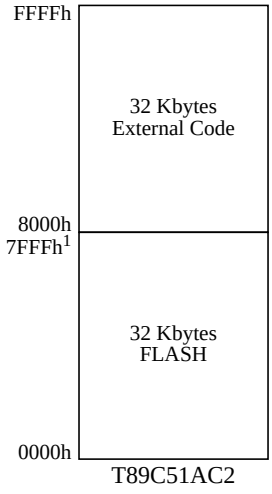

Figure 8. Program/Code Memory Organization

Caution:

1. *If the program executes exclusively from on-chip code memory (not from external memory), beware of executing code from the upper byte of on-chip memory (7FFFh) and thereby disrupt I/O Ports 0 and 2 due to external prefetch. Fetching code constant from this location does not affect Ports 0 and 2.*

7.2. External Code Memory Access

7.2.1. Memory Interface

The external memory interface comprises the external bus (port 0 and port 2) as well as the bus control signals (PSEN#, and ALE).

Figure 9 shows the structure of the external address bus. P0 carries address A7:0 while P2 carries address A15:8. Data D7:0 is multiplexed with A7:0 on P0. Table 12 describes the external memory interface signals.

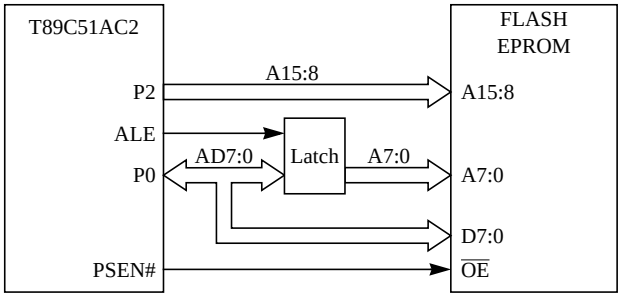

Figure 9. External Code Memory Interface Structure

Table 12. External Data Memory Interface Signals

Signal Name	Type	Description	Alternate Function
A15:8	O	**Address Lines** Upper address lines for the external bus.	P2.7:0
AD7:0	I/O	**Address/Data Lines** Multiplexed lower address lines and data for the external memory.	P0.7:0
ALE	O	**Address Latch Enable** ALE signals indicates that valid address information are available on lines AD7:0.	-
PSEN#	O	**Program Store Enable Output** This signal is active low during external code fetch or external code read (MOVC instruction).	-

7.2.2. External Bus Cycles

This section describes the bus cycles the T89C51AC2 executes to fetch code (see Figure 10) in the external program/code memory.

External memory cycle takes 6 CPU clock periods. This is equivalent to 12 oscillator clock period in standard mode or 6 oscillator clock periods in X2 mode. For further information on X2 mode.(see the clock Section)

For simplicity, the accompanying figure depicts the bus cycle waveforms in idealized form and do not provide precise timing information.

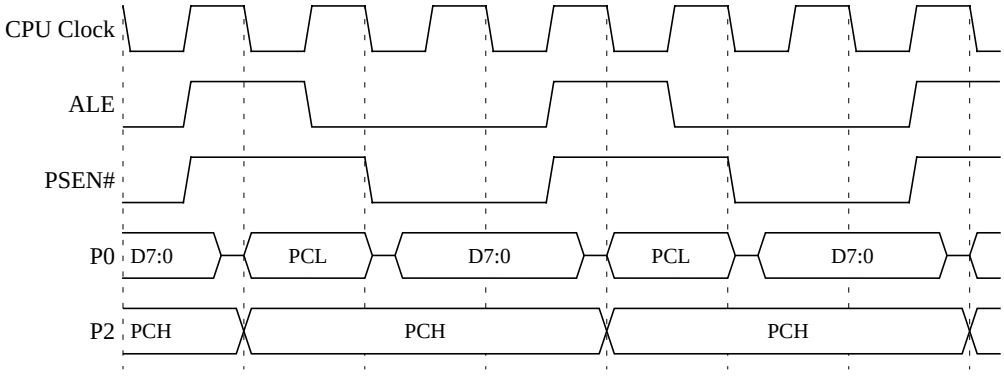

Figure 10. External Code Fetch Waveforms

7.3. FLASH Memory Architecture

T89C51AC2 features two on-chip flash memories:

- Flash memory FM0:
  containing 32 Kbytes of program memory (user space) organized into 128 byte pages,
- Flash memory FM1:
  2 Kbytes for boot loader and Application Programming Interfaces (API).

The FM0 supports both parallel programming and Serial In-System Programming (ISP) whereas FM1 supports only parallel programming by programmers. The ISP mode is detailed in the "In-System Programming" section.

All Read/Write access operations on FLASH Memory by user application are managed by a set of API described in the "In-System Programming" section.

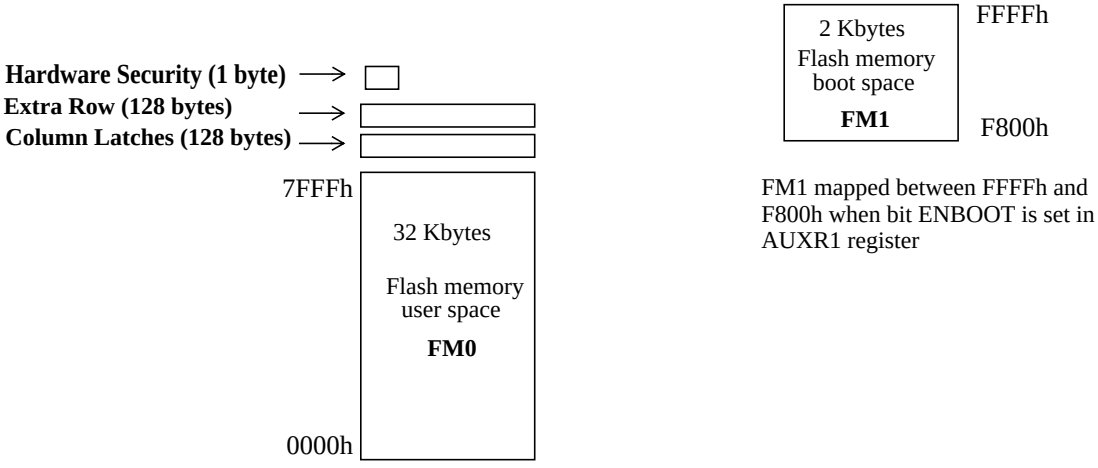

Figure 11. Flash memory architecture

7.3.1. FM0 Memory Architecture

The flash memory is made up of 4 blocks (see Figure 11):

1. The memory array (user space) 32 Kbytes

2. The Extra Row

3. The Hardware security bits

4. The column latch registers

7.3.1.1. User Space

This space is composed of a 32 Kbytes FLASH memory organized in 256 pages of 128 bytes. It contains the user's application code.

7.3.1.2. Extra Row (XRow)

This row is a part of FM0 and has a size of 128 bytes. The extra row may contain information for boot loader usage.

7.3.1.3. Hardware security space

The Hardware security space is a part of FM0 and has a size of 1 byte.
The 4 MSB can be read/written by software, the 4 LSB can only be read by software and written by hardware in parallel mode.

7.3.1.4. Column latches

The column latches, also part of FM0, have a size of full page (128 bytes).
The column latches are the entrance buffers of the three previous memory locations (user array, XROW and Hardware security byte).

7.4. Overview of FM0 operations

The CPU interfaces to the flash memory through the FCON register and AUXR1 register.

These registers are used to:

- Map the memory spaces in the adressable space
- Launch the programming of the memory spaces
- Get the status of the flash memory (busy/not busy)
- Select the flash memory FM0/FM1.

7.4.1. Mapping of the memory space

By default, the user space is accessed by MOVC instruction for read only. The column latches space is made accessible by setting the FPS bit in FCON register. Writing is possible from 0000h to 7FFFh, address bits 6 to 0 are used to select an address within a page while bits 14 to 7 are used to select the programming address of the page. Setting this bit takes precedence on the EXTRAM bit in AUXR register.

The other memory spaces (user, extra row, hardware security) are made accessible in the code segment by programming bits FMOD0 and FMOD1 in FCON register in accordance with Table 13. A MOVC instruction is then used for reading these spaces.

Table 13. .FM0 blocks select bits

FMOD1	FMOD0	FM0 Adressable space
0	0	User (0000h-FFFFh)
0	1	Extra Row(FF80h-FFFFh)
1	0	Hardware Security (0000h)
1	1	reserved

7.4.2. Launching programming

FPL3:0 bits in FCON register are used to secure the launch of programming. A specific sequence must be written in these bits to unlock the write protection and to launch the programming. This sequence is 5 followed by A. Table 14 summarizes the memory spaces to program according to FMOD1:0 bits.

Table 14. Programming spaces

	Write to FCON				Operation
	FPL3:0	FPS	FMOD1	FMOD0	
User	5	X	0	0	No action
	A	X	0	0	Write the column latches in user space
Extra Row	5	X	0	1	No action
	A	X	0	1	Write the column latches in extra row space
Security Space	5	X	1	0	No action
	A	X	1	0	Write the fuse bits space
Reserved	5	X	1	1	No action
	A	X	1	1	No action

The FLASH memory enters a busy state as soon as programming is launched. In this state, the memory is no more available for fetching code.

Caution:
Interrupts that may occur during programming time must be disable to avoid any spurious exit of the idle mode.

7.4.3. Status of the flash memory

The bit FBUSY in FCON register is used to indicate the status of programming.

FBUSY is set when programming is in progress.

7.4.4. Selecting FM0/FM1

The bit ENBOOT in AUXR1 register is used to choose between FM0 and FM1 mapped up to F800h.

7.4.5. Loading the Column Latches

Any number of data from 1 byte to 128 bytes can be loaded in the column latches. This provides the capability to program the whole memory by byte, by page or by any number of bytes in a page.
When programming is launched, an automatic erase of the locations loaded in the column latches is first performed, then programming is effectively done. Thus no page or block erase is needed and only the loaded data are programmed in the corresponding page.

The following procedure is used to load the column latches and is summarized in Figure 12:

- Map the column latch space by setting FPS bit.
- Load the DPTR with the address to load.
- Load Accumulator register with the data to load.
- Execute the MOVX @DPTR, A instruction.
- If needed loop the three last instructions until the page is completely loaded.

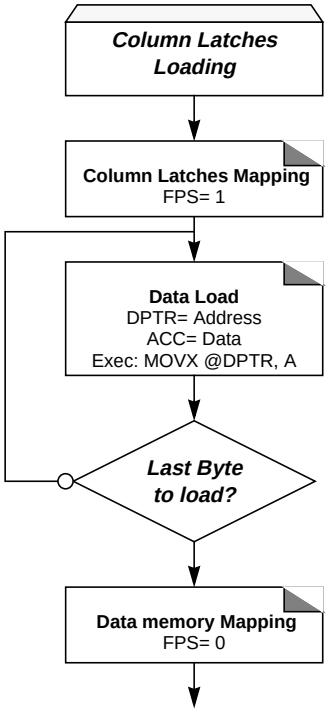

Figure 12. Column Latches Loading Procedure

7.4.6. Programming the FLASH Spaces

User

The following procedure is used to program the User space and is summarized in Figure 13:

- Load data in the column latches from address 0000h to 7FFFh[1].
- Disable the interrupts.
- Launch the programming by writing the data sequence 50h followed by A0h in FCON register. The end of the programming indicated by the FBUSY flag cleared.
- Enable the interrupts.

Note:

1. The last page address used when loading the column latch is the one used to select the page programming address.

Extra Row

The following procedure is used to program the Extra Row space and is summarized in Figure 13:

- Load data in the column latches from address FF80h to FFFFh.
- Disable the interrupts.
- Launch the programming by writing the data sequence 52h followed by A2h in FCON register. The end of the programming indicated by the FBUSY flag cleared.
- Enable the interrupts.

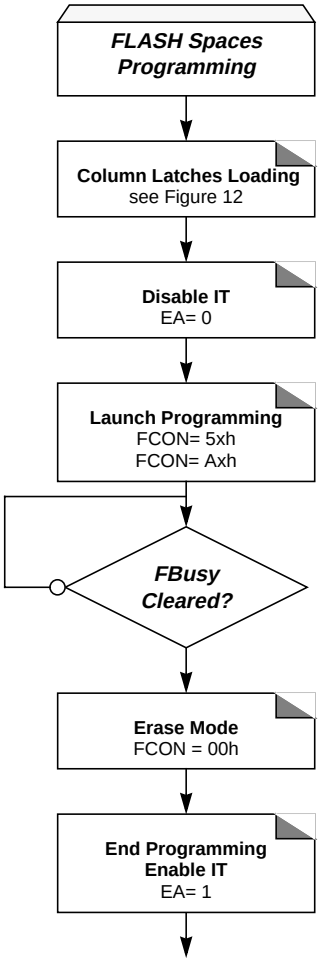

Figure 13. Flash and Extra row Programming Procedure

Hardware Security

The following procedure is used to program the Hardware Security space and is summarized in Figure 14:

- Set FPS and map Harware byte (FCON = 0x0C)
- Disable the interrupts.
- Load DPTR at address 0000h.
- Load Accumulator register with the data to load.
- Execute the MOVX @DPTR, A instruction.
- Launch the programming by writing the data sequence 54h followed by A4h in FCON register. The end of the programming indicated by the FBusy flag cleared.
- Enable the interrupts.

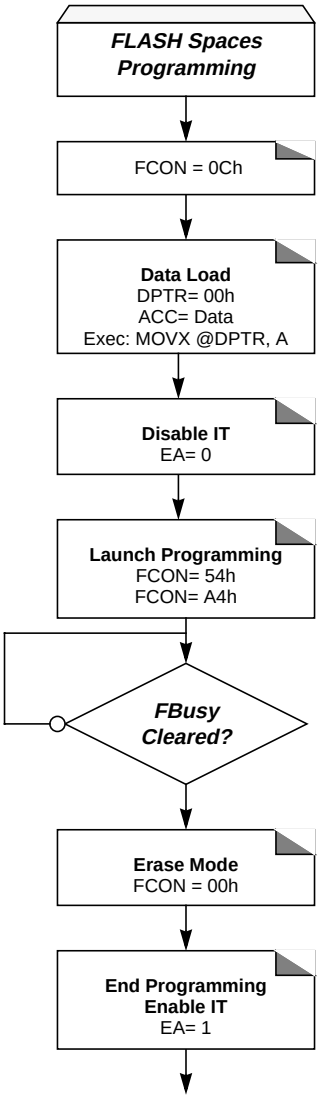

Figure 14. Hardware Programming Procedure

Preview - Confidential

7.4.7. Reading the FLASH Spaces

User

The following procedure is used to read the User space and is summarized in Figure 15:

- Map the User space by writing 00h in FCON register.
- Read one byte in Accumulator by executing MOVC A,@A+DPTR with A= 0 & DPTR= 0000h to FFFFh.

Extra Row

The following procedure is used to read the Extra Row space and is summarized in Figure 15:

- Map the Extra Row space by writing 02h in FCON register.
- Read one byte in Accumulator by executing MOVC A,@A+DPTR with A= 0 & DPTR= FF80h to FFFFh.

Hardware Security

The following procedure is used to read the Hardware Security space and is summarized in Figure 15:

- Map the Hardware Security space by writing 04h in FCON register.
- Read the byte in Accumulator by executing MOVC A,@A+DPTR with A= 0 & DPTR= 0000h.

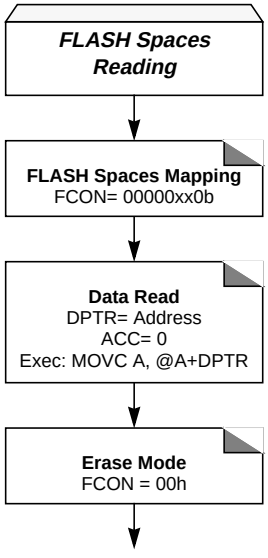

Figure 15. Reading Procedure

7.5. Registers

FCON (S:D1h)
FLASH Control Register

7	6	5	4	3	2	1	0
FPL3	**FPL2**	**FPL1**	**FPL0**	**FPS**	**FMOD1**	**FMOD0**	**FBUSY**

Bit Number	Bit Mnemonic	Description
7-4	FPL3:0	**Programming Launch Command Bits** Write 5Xh followed by AXh to launch the programming according to FMOD1:0. (see Table 14.)
3	FPS	**FLASH Map Program Space** Set to map the column latch space in the data memory space. Clear to re-map the data memory space.
2-1	FMOD1:0	**FLASH Mode** See Table 13 or Table 14.
0	FBUSY	**FLASH Busy** Set by hardware when programming is in progress. Clear by hardware when programming is done. Can not be cleared by software.

Reset Value= 0000 0000b

Figure 16. FCON Register

Preview - Confidential

8. Data Memory

8.1. Introduction

The T89C51AC2 provides data memory access in two different spaces:

1. The internal space mapped in three separate segments:
   - the lower 128 bytes RAM segment.
   - the upper 128 bytes RAM segment.
   - the expanded 1024 bytes RAM segment (ERAM).
2. The external space.

A fourth internal segment is available but dedicated to Special Function Registers, SFRs, (addresses 80h to FFh) accessible by direct addressing mode.

Figure 17 shows the internal and external data memory spaces organization.

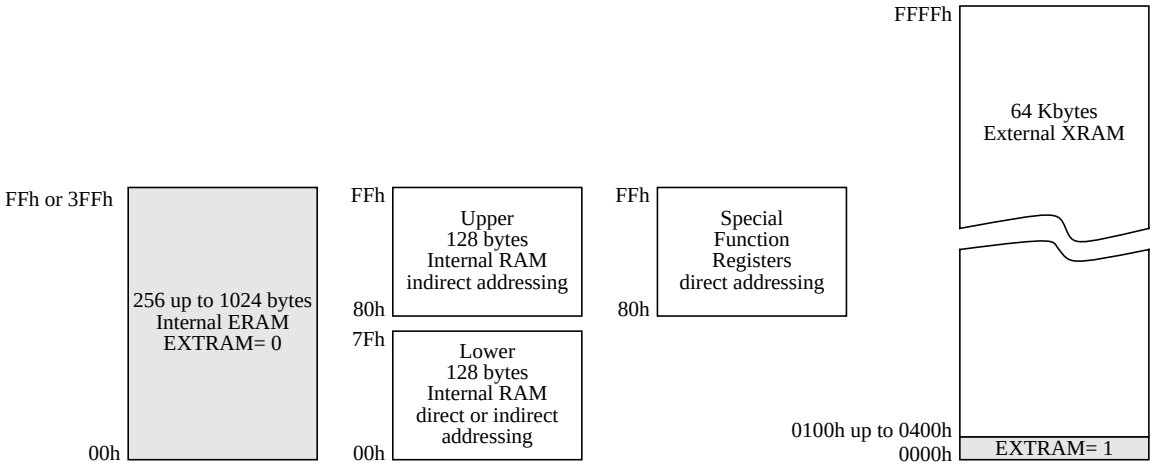

Figure 17. Internal and External Data Memory Organization

Preview - Confidential

8.2. Internal Space

8.2.1. Lower 128 Bytes RAM

The lower 128 bytes of RAM (see Figure 17) are accessible from address 00h to 7Fh using direct or indirect addressing modes. The lowest 32 bytes are grouped into 4 banks of 8 registers (R0 to R7). Two bits RS0 and RS1 in PSW register (see Figure 23) select which bank is in use according to Table 15. This allows more efficient use of code space, since register instructions are shorter than instructions that use direct addressing, and can be used for context switching in interrupt service routines.

Table 15. Register Bank Selection

RS1	RS0	Description
0	0	Register bank 0 from 00h to 07h
0	1	Register bank 0 from 08h to 0Fh
1	0	Register bank 0 from 10h to 17h
1	1	Register bank 0 from 18h to 1Fh

The next 16 bytes above the register banks form a block of bit-addressable memory space. The C51 instruction set includes a wide selection of single-bit instructions, and the 128 bits in this area can be directly addressed by these instructions. The bit addresses in this area are 00h to 7Fh.

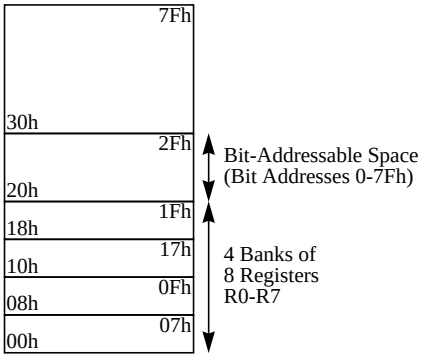

Figure 18. Lower 128 bytes Internal RAM Organization

8.2.2. Upper 128 Bytes RAM

The upper 128 bytes of RAM are accessible from address 80h to FFh using only indirect addressing mode.

8.2.3. Expanded RAM

The on-chip 1024 bytes of expanded RAM (ERAM) are accessible from address 0000h to 03FFh using indirect addressing mode through MOVX instructions. In this address range, the bit EXTRAM in AUXR register is used to select the ERAM (default) or the XRAM. As shown in Figure 17 when EXTRAM= 0, the ERAM is selected and when EXTRAM= 1, the XRAM is selected.

Caution:

Lower 128 bytes RAM, Upper 128 bytes RAM, and expanded RAM are made of volatile memory cells. This means that the RAM content is indeterminate after power-up and must then be initialized properly.

8.3. External Space

8.3.1. Memory Interface

The external memory interface comprises the external bus (port 0 and port 2) as well as the bus control signals (RD#, WR#, and ALE).

Figure 19 shows the structure of the external address bus. P0 carries address A7:0 while P2 carries address A15:8. Data D7:0 is multiplexed with A7:0 on P0. Table 16 describes the external memory interface signals.

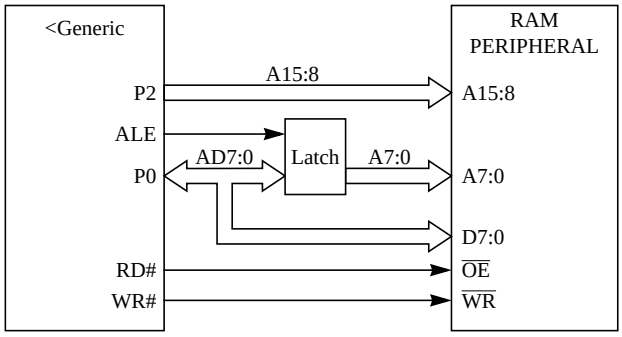

Figure 19. External Data Memory Interface Structure

Table 16. External Data Memory Interface Signals

Signal Name	Type	Description	Alternative Function
A15:8	O	**Address Lines** Upper address lines for the external bus.	P2.7:0
AD7:0	I/O	**Address/Data Lines** Multiplexed lower address lines and data for the external memory.	P0.7:0
ALE	O	**Address Latch Enable** ALE signals indicates that valid address information are available on lines AD7:0.	-
RD#	O	**Read** Read signal output to external data memory.	P3.7
WR#	O	**Write** Write signal output to external memory.	P3.6

8.3.2. External Bus Cycles

This section describes the bus cycles the T89C51AC2 executes to read (see Figure 20), and write data (see Figure 21) in the external data memory.
External memory cycle takes 6 CPU clock periods. This is equivalent to 12 oscillator clock period in standard mode or 6 oscillator clock periods in X2 mode. For further information on X2 mode.

Slow peripherals can be accessed by stretching the read and write cycles. This is done using the M0 bit in AUXR register. Setting this bit changes the width of the RD# and WR# signals from 3 to 15 CPU clock periods.

For simplicity, the accompanying figures depict the bus cycle waveforms in idealized form and do not provide precise timing information. For bus cycle timing parameters refer to the Section “AC Characteristics” of the T89C51AC2 datasheet.

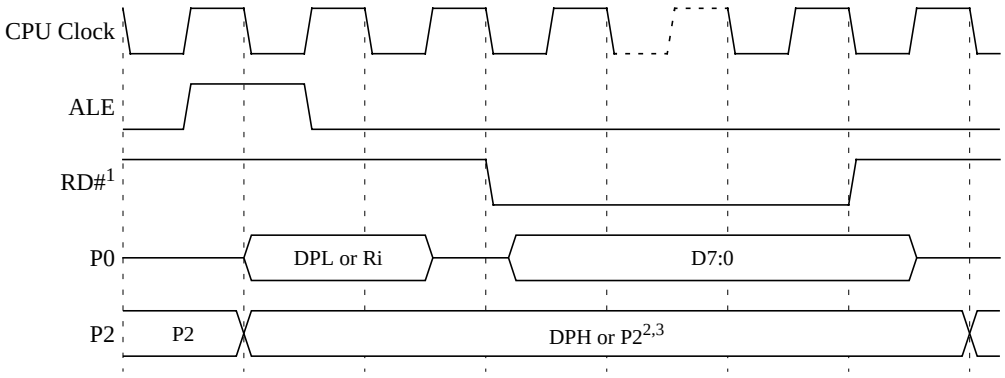

Figure 20. External Data Read Waveforms

Notes:
1. *RD# signal may be stretched using M0 bit in AUXR register.*
2. *When executing MOVX @Ri instruction, P2 outputs SFR content.*
3. *When executing MOVX @DPTR instruction, if DPHDIS is set (Page Access Mode), P2 outputs SFR content instead of DPH.*

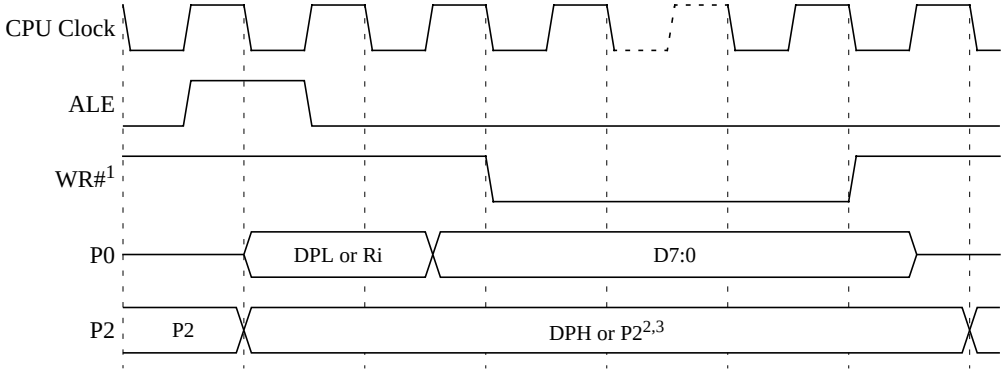

Figure 21. External Data Write Waveforms

Notes:
1. *WR# signal may be stretched using M0 bit in AUXR register.*
2. *When executing MOVX @Ri instruction, P2 outputs SFR content.*
3. *When executing MOVX @DPTR instruction, if DPHDIS is set (Page Access Mode), P2 outputs SFR content instead of DPH.*

8.4. Dual Data Pointer

8.4.1. Description

The T89C51AC2 implements a second data pointer for speeding up code execution and reducing code size in case of intensive usage of external memory accesses.
DPTR0 and DPTR1 are seen by the CPU as DPTR and are accessed using the SFR addresses 83h and 84h that are the DPH and DPL addresses. The DPS bit in AUXR1 register (see Figure 25) is used to select whether DPTR is the data pointer 0 or the data pointer 1 (see Figure 22).

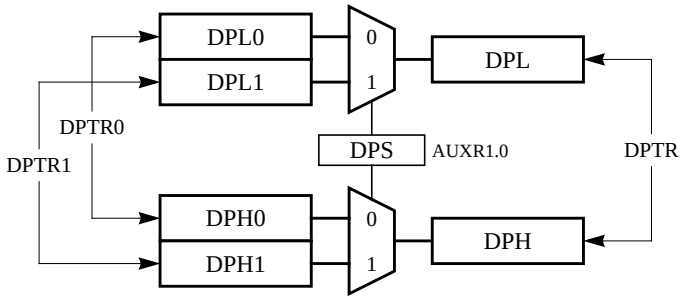

Figure 22. Dual Data Pointer Implementation

8.4.2. Application

Software can take advantage of the additional data pointers to both increase speed and reduce code size, for example, block operations (copy, compare, search …) are well served by using one data pointer as a “source” pointer and the other one as a “destination” pointer.
Hereafter is an example of block move implementation using the two pointers and coded in assembler. Latest C compiler take also advantage of this feature by providing enhanced algorithm libraries.
The INC instruction is a short (2 bytes) and fast (6 CPU clocks) way to manipulate the DPS bit in the AUXR1 register. However, note that the INC instruction does not directly force the DPS bit to a particular state, but simply toggles it. In simple routines, such as the block move example, only the fact that DPS is toggled in the proper sequence matters, not its actual value. In other words, the block move routine works the same whether DPS is '0' or '1' on entry.

```
; ASCII block move using dual data pointers
; Modifies DPTR0, DPTR1, A and PSW
; Ends when encountering NULL character
; Note: DPS exits opposite of entry state unless an extra INC AUXR1 is added

AUXR1      EQU    0A2h

move:      mov    DPTR,#SOURCE              ; address of SOURCE
           inc    AUXR1                     ; switch data pointers
           mov    DPTR,#DEST                ; address of DEST
mv_loop:   inc    AUXR1                     ; switch data pointers
           movx   A,@DPTR                   ; get a byte from SOURCE
           inc    DPTR                      ; increment SOURCE address
           inc    AUXR1                     ; switch data pointers
           movx   @DPTR,A                   ; write the byte to DEST
           inc    DPTR                      ; increment DEST address
           jnz    mv_loop                   ; check for NULL terminator
end_move:
```

8.5. Registers

PSW (S:8Eh)
Program Status Word Register.

7	6	5	4	3	2	1	0
CY	**AC**	**F0**	**RS1**	**RS0**	**OV**	**F1**	**P**

Bit Number	Bit Mnemonic	Description
7	CY	**Carry Flag** Carry out from bit 1 of ALU operands.
6	AC	**Auxiliary Carry Flag** Carry out from bit 1 of addition operands.
5	F0	**User Definable Flag 0.**
4-3	RS1:0	**Register Bank Select Bits** Refer to Table 15 for bits description.
2	OV	**Overflow Flag** Overflow set by arithmetic operations.
1	F1	**User Definable Flag 1.**
0	P	**Parity Bit** Set when ACC contains an odd number of 1's. Cleared when ACC contains an even number of 1's.

Reset Value= 0000 0000b

Figure 23. PSW Register

Preview - Confidential

AUXR (S:8Eh)
Auxiliary Register

7	6	5	4	3	2	1	0
-	-	M0	-	XRS1	XRS0	EXTRAM	A0

Bit Number	Bit Mnemonic	Description
7-6	-	**Reserved** The value read from these bits are indeterminate. Do not set this bit.
5	M0	**Stretch MOVX control:** the RD/ and the WR/ pulse length is increased according to the value of M0. **M0 Pulse length in clock period** 0 6 1 30
4	-	**Reserved** The value read from this bit is indeterminate. Do not set this bit.
3-2	XRS1-0	**ERAM size:** Accessible size of the ERAM **XRS1:0 ERAM size** 0 0 256 bytes 0 1 512 bytes 1 0 768 bytes 1 1 1024 bytes (default)
1	EXTRAM	**Internal/External RAM (00h - FFh)** access using MOVX @ Ri /@ DPTR 0 - Internal ERAM access using MOVX @ Ri / @ DPTR. 1 - External data memory access.
0	A0	**Disable/Enable ALE)** 0 - ALE is emitted at a constant rate of 1/6 the oscillator frequency (or 1/3 if X2 mode is used) 1 - ALE is active only during a MOVX or MOVC instruction.

Reset Value= X00X 1100b
Not bit addressable

Figure 24. AUXR Register

AUXR1 (S:A2h)
Auxiliary Control Register 1.

7	6	5	4	3	2	1	0
-	-	ENBOOT	-	GF3	0	-	DPS

Bit Number	Bit Mnemonic	Description
7-6	-	**Reserved** The value read from these bits is indeterminate. Do not set these bits.
5	ENBOOT	**Enable Boot Flash** Set this bit for map the boot flash between F800h -FFFFh Clear this bit for disable boot flash.
4	-	**Reserved** The value read from this bit is indeterminate. Do not set this bit.
3	GF3	**General Purpose Flag 3.**
2	0	**Always Zero** This bit is stuck to logic 0 to allow INC AUXR1 instruction without affecting GF3 flag.
1	-	**Reserved for Data Pointer Extension.**
0	DPS	**Data Pointer Select Bit** Set to select second dual data pointer: DPTR1. Clear to select first dual data pointer: DPTR0.

Reset Value= XXXX 00X0b

Figure 25. AUXR1 Register

9. EEPROM data memory

9.1. General description

The 2k byte on-chip EEPROM memory block is located at addresses 0000h to 07FFh of the XRAM memory space and is selected by setting control bits in the EECON register.

A read in the EEPROM memory is done with a MOVX instruction.

A physical write in the EEPROM memory is done in two steps: write data in the column latches and transfer of all data latches into an EEPROM memory row (programming).

The number of data written on the page may vary from 1 to 128 bytes (the page size). When programming, only the data written in the column latch is programmed and a ninth bit is used to obtain this feature. This provides the capability to program the whole memory by bytes, by page or by a number of bytes in a page. Indeed, each ninth bit is set when the writing the corresponding byte in a row and all these ninth bits are reset after the writing of the complete EEPROM row.

9.2. Write Data in the column latches

Data is written by byte to the column latches as for an external RAM memory. Out of the 11 address bits of the data pointer, the 4 MSBs are used for page selection (row) and 7 are used for byte selection. Between two EEPROM programming sessions, all the addresses in the column latches must stay on the same page, meaning that the 4 MSB must no be changed.

The following procedure is used to write to the column latches:

- Set bit EEE of EECON register
- Load DPTR with the address to write
- Store A register with the data to be written
- Execute a MOVX @DPTR, A
- If needed loop the three last instructions until the end of a 128 bytes page

9.3. Programming

The EEPROM programming consists on the following actions:

- writing one or more bytes of one page in the column latches. Normally, all bytes must belong to the same page; if not, the first page address will be latched and the others discarded.
- launching programming by writing the control sequence (54h followed by A4h) to the EECON register.
- EEBUSY flag in EECON is then set by hardware to indicate that programming is in progress and that the EEPROM segment is not available for reading.
- The end of programming is indicated by a hardware clear of the EEBUSY flag.

9.4. Read Data

The following procedure is used to read the data stored in the EEPROM memory:

- Set bit EEE of EECON register
- Load DPTR with the address to read
- Execute a MOVX A, @DPTR

9.5. Registers

EECON (S:0D2h)
EEPROM Control Register

7	6	5	4	3	2	1	0
EEPL3	**EEPL2**	**EEPL1**	**EEPL0**	**-**	**-**	**EEE**	**EEBUSY**

Bit Number	Bit Mnemonic	Description
7-4	EEPL3-0	**Programming Launch command bits** Write 5Xh followed by AXh to EEPL to launch the programming.
3	-	**Reserved** The value read from this bit is indeterminate. Do not set this bit.
2	-	**Reserved** The value read from this bit is indeterminate. Do not set this bit.
1	EEE	**Enable EEPROM Space bit** Set to map the EEPROM space during MOVX instructions (Write in the column latches) Clear to map the XRAM space during MOVX.
0	EEBUSY	**Programming Busy flag** Set by hardware when programming is in progress. Cleared by hardware when programming is done. Can not be set or cleared by software.

Reset Value= XXXX XX00b
Not bit addressable

Figure 26. EECON Register

10. In-System-Programming (ISP)

10.1. Introduction

With the implementation of the User ROM and the Boot ROM in Flash technology the T89C51AC2 allows the system engineer the development of applications with a very high level of flexibility. This flexibility is based on the possibility to alter the customer programming on all stages of a product's life:

- During the final production phase, the 1st personalization of the product by parallel or serial charging of the code in the User ROM and if wanted also a customized Boot loader in the Boot memory (Atmel will provide also a standard Boot loader by default).
- After assembling of the product in its final, embedded position by serial mode via the UART.

This In-System-Programming (ISP) allows code modification over the total lifetime of the product.

Besides the default Boot loader Atmel will provide to the customer also all the needed Application-Programming-Interfaces (API) which are needed for the ISP. The API will be located also in the Boot memory.

This will allow the customer to have a full use of the 32 Kbyte user memory.

Two blocks flash memories are implemented (see Figure 27):

- Flash memory FM0:
  containing 32 Kbytes of program memory organized in page of 128 bytes,
- Flash memory FM1:
  2 Kbytes for default boot loader and Application Programming Interfaces (API).

The FM0 supports both, hardware (parallel) and software programming whereas FM1 supports only hardware programming.

The ISP functions are assumed by:

- FCON register & bit ENBOOT in AUXR1 register,
- Software Boot Vector (SBV), which can be read and modified by using an API or the parallel programming mode (see Figure 30)
  The SBV is stored in XROW.
- The Fuse bit Boot Loader Jump Bit (BLJB) can be read and modified using an API or the parallel programming mode.
  The BLJB is located in the Hardware security byte (see Figure 32).
- The Extra Byte (EB) and Boot Status Byte (BSB) can be modified only by using API (see Figure 32).
  EB is stored in XROW

The bit ENBOOT in AUXR1 register allows to map FM1 between address F800h and FFFFh of FM0.

The FM0 can be programed by:

- The Atmel boot loader, located by default in FM1.
- The user boot loader located in FM0
- The user boot loader located in FM1 in place of Atmel boot loader.

API contained in FM1 can be called by the user boot loader located in FM0 at the address [SBV]00h.

The user program simply calls the common entry point with appropriate parameters in FM1 to accomplish the desired operation (all these methods will describe in Application Notes on api-description).

Boot Flash operations include: erase block, program byte or page, verify byte or page, program security lock bit, etc. Indeed, Atmel provides the binary code of the default Flash boot loader.

10.2. Flash Programming and Erasure

There are three methods of programming the Flash memory:

- The Atmel bootloader located in FM1 is activated by the application. Low level API routines (located in FM1) to program FM0 will be used. The interface used for serial downloading to FM0 is the UART. API can be called also by user's bootloader located in FM0 at [SBV]00h.
- A further method exist in activating the Atmel boot loader by hardware activation.
- The FM0 can be programed also by the parallel mode using a programmer.

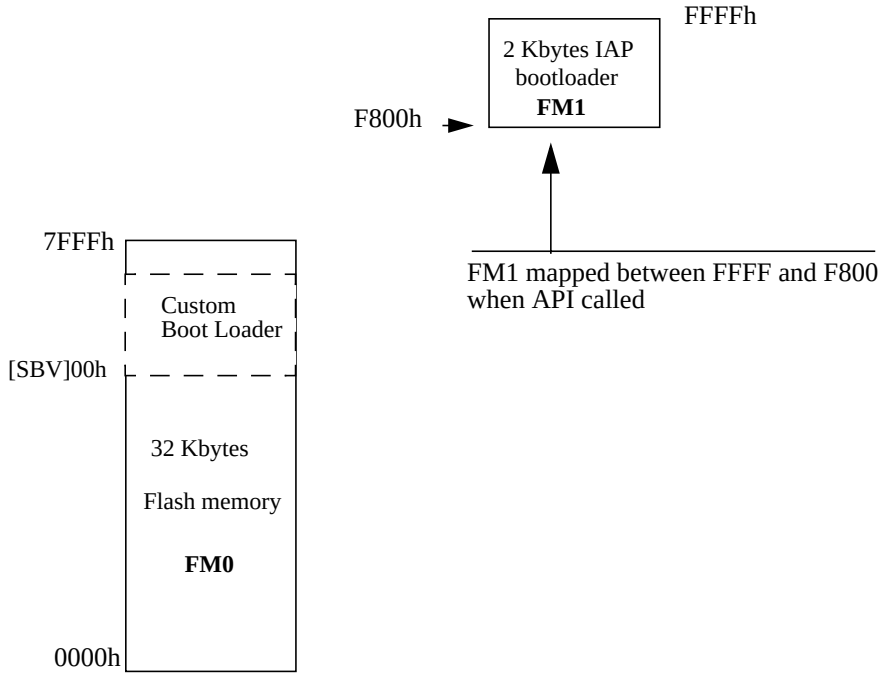

Figure 27. Flash Memory Mapping

Preview - Confidential

10.2.1. Flash Parallel Programming

The three lock bits in Hardware byte are programmed according to Table, will provide different level of protection for the on-chip code and data located in FM0 and FM1.

The only way for write this bits are the parallel mode.

Table 17. Program Lock bit

Program Lock Bits				Protection description
Security level	LB0	LB1	LB2	
1	U	U	U	No program lock features enabled. MOVC instruction executed from external program memory returns non encrypted data.
2	P	U	U	MOVC instruction executed from external program memory are disabled from fetching code bytes from internal memory, $\overline{EA}$ is sampled and latched on reset, and further parallel programming of the Flash is disabled.
3	U	P	U	Same as 2, also verify through parallel programming interface is disabled.
4	U	U	P	Same as 3, also external execution is disabled.

Program Lock bits

U: unprogrammed

P: programmed

WARNING: Security level 2 and 3 should only be programmed after Flash and Core verification.

Program Lock bits

These security bits protect the code access through the parallel programming interface. They are set by default to level 4.

10.3 Boot Process

10.3.1. Software boot process example

Many algorithms can be used for the software boot process. Before describing them, some explanations are needed for the utility of different flags and bytes available.

Boot Loader Jump Bit (BLJB):
- This bit indicates if on RESET the user wants jump on his application at address @0000h on FM0 or execute the boot loader at address @F800h on FM1.
- BLJB = 0 on parts delivered with bootloader programmed.
- To read or modified this bit, the APIs are used.

Boot Vector Address (SBV):
- This byte contains the msb of the user boot loader address in FM0.
- The default value of SBV is FFh (no user boot loader in FM0).
- To read or modified this byte, the APIs are used.

Extra Byte (EB) & Boot Status Byte (BSB):
- These bytes are reserved for customer use.
- To read or modified this byte, the APIs are used.

Example of software boot process in FM1 (see Figure 29)

In this example the Extra Byte (EB) is a configuration bit which forces the user boot loader execution even on the hardware condition.

10.3.2. Hardware boot process

At the falling edge of RESET, the bit ENBOOT in AUXR1 register is initialized with the value of Boot Loader Jump Bit (BLJB).

Further at the falling edge of RESET if the following conditions (called Hardware condition) are detected:

- PSEN low,
- EA high,
- ALE high (or not connected).

FCON register is initialized with the value 00h and the program in FM1 can be executed.

The Hardware condition allows jump in bootloader (FM1) whatever BLJB value.

If no hardware condition is detected, the FCON register is initialized with the value F0h.

Check of the BLJB value.

- If bit BLJB is cleared (BLJB = 1):
  User application in FM0 will be started at @0000h (standard reset).
- If bit BLJB is set (BLJB = 0):
  Boot loader will be started at @F800h in FM1.

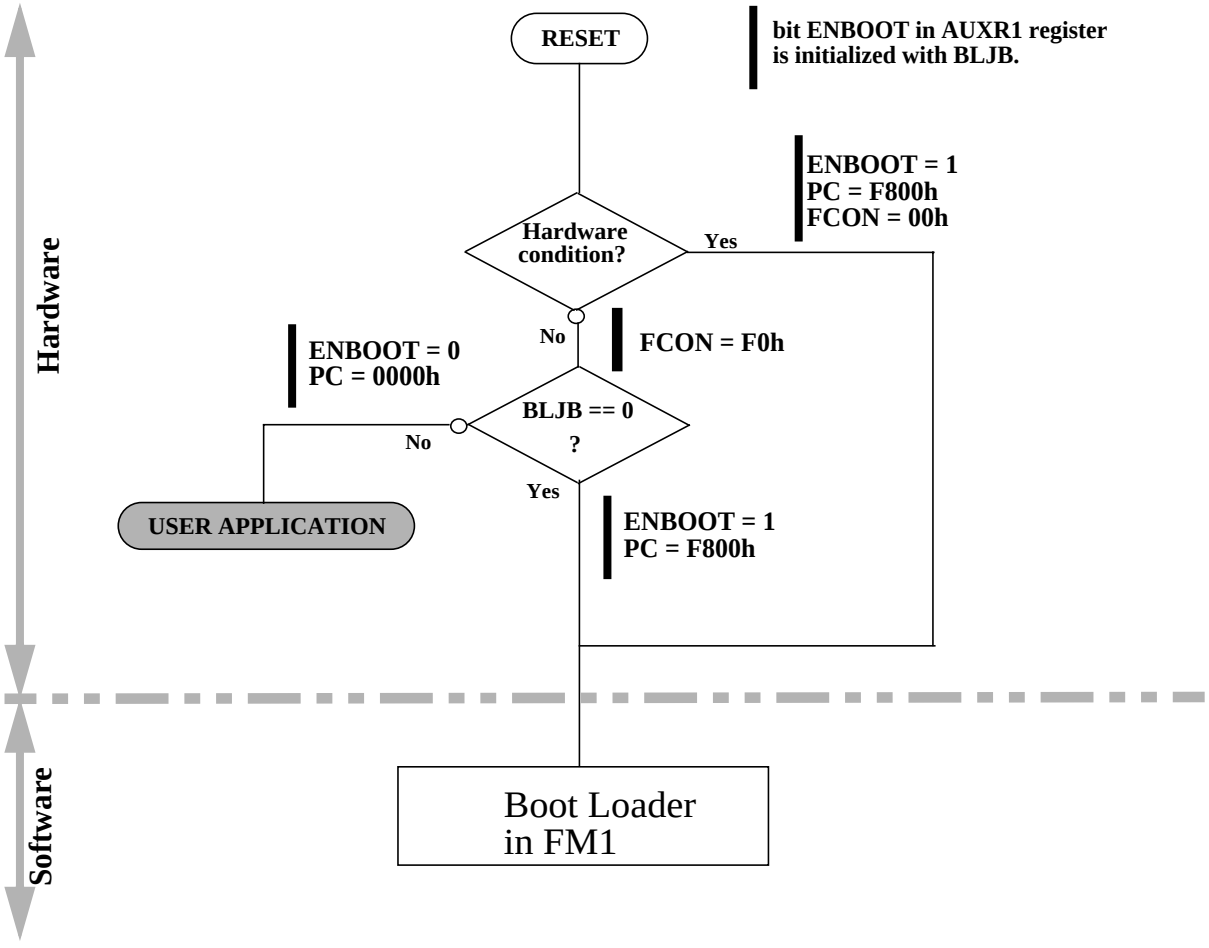

Figure 28. Hardware Boot Process Algorithm

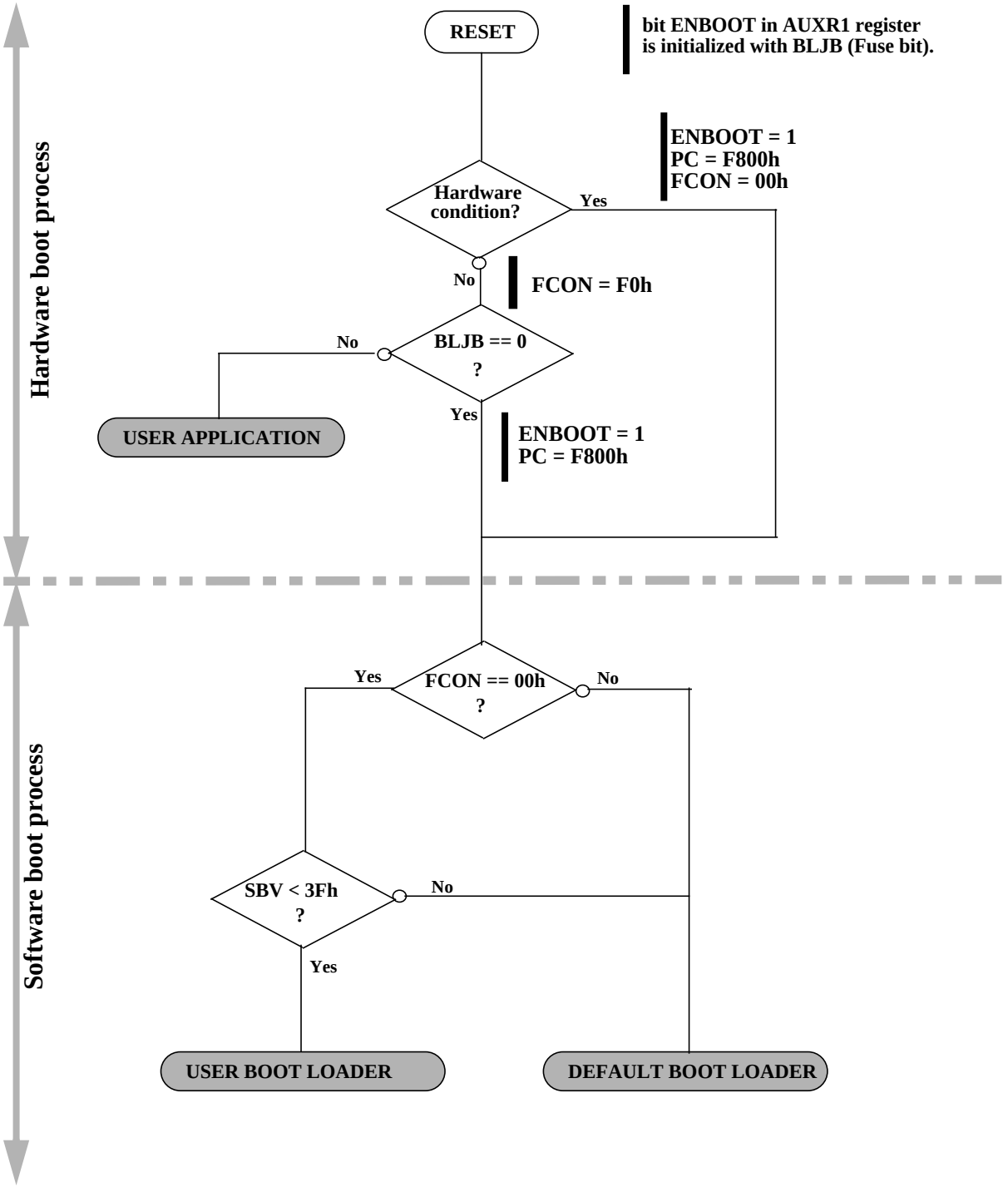

Figure 29. Example of Software Boot process

Preview - Confidential

10.4. 2 Application-Programming-Interface

Several Application Program Interface (API) calls are available for use by an application program to permit selective erasing and programming of FLASH pages. All calls are made by functions.

All these APIs will be describe in an application note.

API CALL	Description
PROGRAM DATA BYTE	Write a byte in flash memory
PROGRAM DATA PAGE	Write a page (128 bytes) in flash memory
PROGRAM EEPROM BYTE	Write a byte in Eeprom memory
ERASE BLOCK	Erase all flash memory
ERASE BOOT VECTOR (SBV)	Erase the boot vector
PROGRAM BOOT VECTOR (SBV)	Write the boot vector
PROGRAM EXTRA BYTE (EB)	Write the extra byte
READ DATA BYTE	
READ EEPROM BYTE	
READ FAMILY CODE	
READ MANUFACTURER CODE	
READ PRODUCT NAME	
READ REVISION NUMBER	
READ STATUS BIT (BSB)	Read the status bit
READ BOOT VECTOR (SBV)	Read the boot vector
READ EXTRA BYTE (EB)	Read the extra byte
PROGRAM X2	Write the hardware flag for X2 mode
READ X2	Read the hardware flag for X2 mode
PROGRAM BLJB	Write the hardware flag BLJB
READ BLJB	Read the hardware flag BLJB

10.5. Application remarks

- After loading a new program using by the boot loader, the BLJB bit must be set to allow user application to start at RESET.

- A user bootloader can be mapped at address [SBV]00h. The byte SBV contains the high byte of the boot address, and can be read and written by API.

- The API can be called during user application, without disabling interrupt.
  The interrupts are disabled by some APIs, for complex operations.

10.6. XROW Bytes

Mnemonic	Description	Default value	Address
SBV	Boot Vector Address	F8h	01h
SSB	Software Security Byte	FFh	05h
EB	Extra Byte	FFh	06h
	Copy of the Manufacturer Code	58h	30h
	Copy of the Device ID#1: Family code	D7h	31h
	Copy of the Device ID#2:Memories size and type	F7h	60h
	Copy of the Device ID#3:Name and Revision	FFh	61h

Table 18. Xrow mapping

SBV register
Software Boot Vector

7	6	5	4	3	2	1	0
ADD 7	**ADD 6**	**ADD 5**	**ADD 4**	**ADD 3**	**ADD 2**	**ADD 1**	**ADD 0**

Bit Number	Bit Mnemonic	Description
7-0	ADD7:0	**MSB of user boot loader address location**

Default value after erasing chip: FFh
NOTE:
*Only accessed by the **API or in the parallel programming mode**.*

Figure 30. SBV Register

EB register
EXTRA BYTE

7	6	5	4	3	2	1	0
-	-	-	-	-	-	-	-

Bit Number	Bit Mnemonic	Description
7-0	-	**User definition**

Default value after erasing chip: FFh
NOTE:
*TOnly accessed by the **API or in the parallel programming mode**.*

Figure 31. EB Register

10.7. Hardware Byte

7	6	5	4	3	2	1	0
X2B	**BLJB**	**-**	**-**	**-**	**LB2**	**LB1**	**LB0**

Bit Number	Bit Mnemonic	Description
7	X2B	**X2 Bit** Set this bit to start in standard mode Clear this bit to start in X2 mode.
6	BLJB	**Boot Loader JumpBit** Clear (=1)this bit to start the user's application on next RESET (@0000h) located in FM0, Set (=0)this bit to start the boot loader(@F800h) located in FM1.
5-3	-	**Reserved** The value read from these bits are indeterminate.
2-0	LB2:0	**Lock Bits**

Default value after erasing chip: FFh

NOTE:
Only the 4 MSB bits can be access by software.
The 4 LSB bits can only be access by parallel mode.

Figure 32. Hardware byte

Preview - Confidential

11. Serial I/O Port

The T89C51AC2 I/O serial port is compatible with the I/O serial port in the 80C52.
It provides both synchronous and asynchronous communication modes. It operates as a Universal Asynchronous Receiver and Transmitter (UART) in three full-duplex modes (Modes 1, 2 and 3). Asynchronous transmission and reception can occur simultaneously and at different baud rates

Serial I/O port includes the following enhancements:

- Framing error detection
- Automatic address recognition

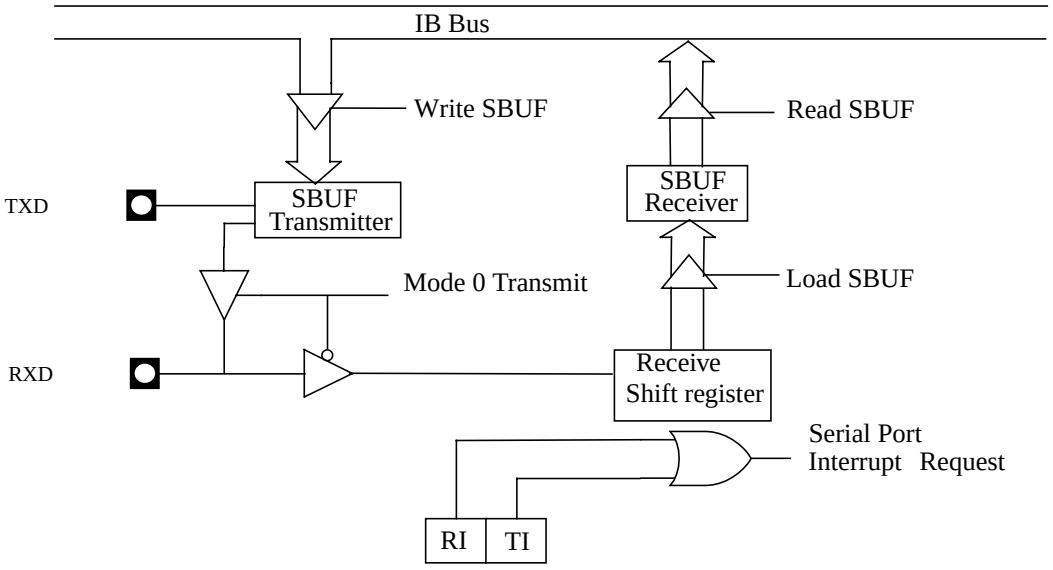

Figure 33. Serial I/O Port Block Diagram

11.1. Framing Error Detection

Framing bit error detection is provided for the three asynchronous modes. To enable the framing bit error detection feature, set SMOD0 bit in PCON register.

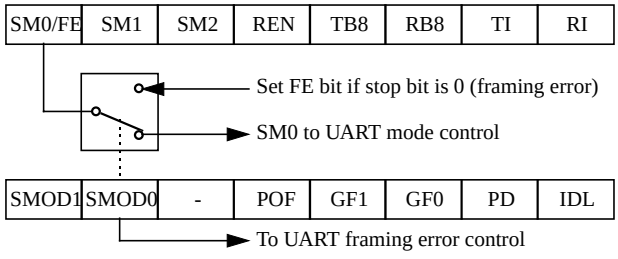

Figure 34. Framing Error Block Diagram

When this feature is enabled, the receiver checks each incoming data frame for a valid stop bit. An invalid stop bit may result from noise on the serial lines or from simultaneous transmission by two CPUs. If a valid stop bit is not found, the Framing Error bit (FE) in SCON register bit is set.

The software may examine the FE bit after each reception to check for data errors. Once set, only software or a reset clears the FE bit. Subsequently received frames with valid stop bits cannot clear the FE bit. When the FE feature is enabled, RI rises on the stop bit instead of the last data bit (See Figure 35. and Figure 36.).

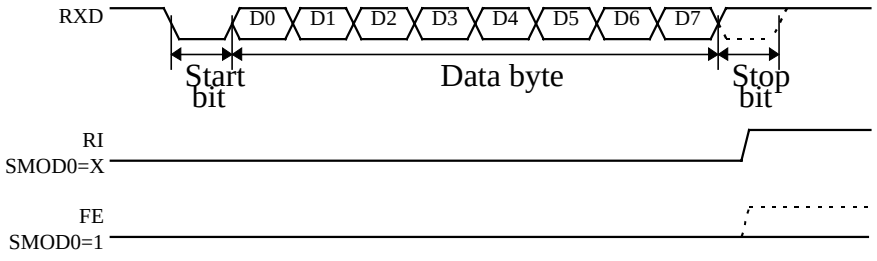

Figure 35. UART Timing in Mode 1

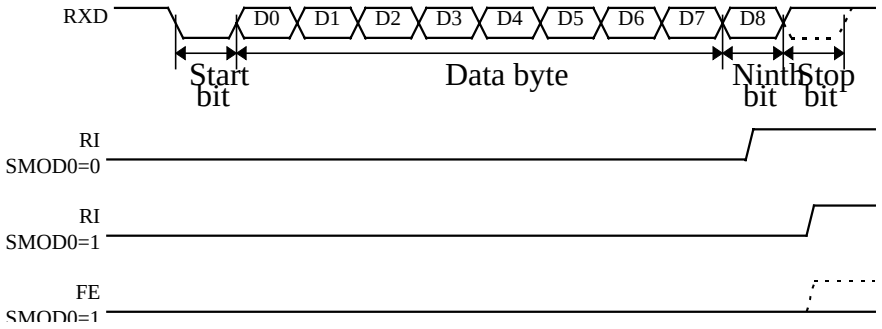

Figure 36. UART Timing in Modes 2 and 3

11.2. Automatic Address Recognition

The automatic address recognition feature is enabled when the multiprocessor communication feature is enabled (SM2 bit in SCON register is set).

Implemented in the hardware, automatic address recognition enhances the multiprocessor communication feature by allowing the serial port to examine the address of each incoming command frame. Only when the serial port recognizes its own address will the receiver set the RI bit in the SCON register to generate an interrupt. This ensures that the CPU is not interrupted by command frames addressed to other devices.

If necessary, you can enable the automatic address recognition feature in mode 1. In this configuration, the stop bit takes the place of the ninth data bit. Bit RI is set only when the received command frame address matches the device's address and is terminated by a valid stop bit.

To support automatic address recognition, a device is identified by a given address and a broadcast address.

NOTE: The multiprocessor communication and automatic address recognition features cannot be enabled in mode 0 (i.e. setting SM2 bit in SCON register in mode 0 has no effect).

11.3. Given Address

Each device has an individual address that is specified in the SADDR register; the SADEN register is a mask byte that contains don't-care bits (defined by zeros) to form the device's given address. The don't-care bits provide the flexibility to address one or more slaves at a time. The following example illustrates how a given address is formed. To address a device by its individual address, the SADEN mask byte must be 1111 1111b.
For example:

```
SADDR      0101 0110b
SADEN      1111 1100b
Given      0101 01XXb
```

Here is an example of how to use given addresses to address different slaves:

```
Slave A:   SADDR      1111 0001b
           SADEN      1111 1010b
           Given      1111 0X0Xb

Slave B:   SADDR      1111 0011b
           SADEN      1111 1001b
           Given      1111 0XX1b

Slave C:   SADDR      1111 0010b
           SADEN      1111 1101b
           Given      1111 00X1b
```

The SADEN byte is selected so that each slave may be addressed separately.
For slave A, bit 0 (the LSB) is a don't-care bit; for slaves B and C, bit 0 is a 1. To communicate with slave A only, the master must send an address where bit 0 is clear (e.g. 1111 0000b).
For slave A, bit 1 is a 0; for slaves B and C, bit 1 is a don't care bit. To communicate with slaves A and B, but not slave C, the master must send an address with bits 0 and 1 both set (e.g. 1111 0011b).
To communicate with slaves A, B and C, the master must send an address with bit 0 set, bit 1 clear, and bit 2 clear (e.g. 1111 0001b).

11.4. Broadcast Address

A broadcast address is formed from the logical OR of the SADDR and SADEN registers with zeros defined as don't-care bits, e.g.:

```
SADDR            0101 0110b
SADEN            1111 1100b
SADDR OR SADEN   1111 111Xb
```

The use of don't-care bits provides flexibility in defining the broadcast address, however in most applications, a broadcast address is FFh. The following is an example of using broadcast addresses:

```
Slave A:   SADDR      1111 0001b
           SADEN      1111 1010b
           Given      1111 1X11b,

Slave B:   SADDR      1111 0011b
           SADEN      1111 1001b
           Given      1111 1X11B,

Slave C:   SADDR=     1111 0010b
           SADEN      1111 1101b
           Given      1111 1111b
```

For slaves A and B, bit 2 is a don't care bit; for slave C, bit 2 is set. To communicate with all of the slaves, the master must send an address FFh. To communicate with slaves A and B, but not slave C, the master can send and address FBh.

11.5. REGISTERS

SCON (S:98h)
Serial Control Register

7	6	5	4	3	2	1	0
FE/SM0	**SM1**	**SM2**	**REN**	**TB8**	**RB8**	**TI**	**RI**

Bit Number	Bit Mnemonic	Description
7	FE	**Framing Error bit (SMOD0=1)** Clear to reset the error state, not cleared by a valid stop bit. Set by hardware when an invalid stop bit is detected.
	SM0	**Serial port Mode bit 0 (SMOD0=0)** Refer to SM1 for serial port mode selection.
6	SM1	**Serial port Mode bit 1** SM0 SM1 ModeBaud Rate 0 0 Shift Register$F_{XTAL}/12$ 0 1 8-bit UARTVariable 1 0 9-bit UART$F_{XTAL}/64$ or $F_{XTAL}/32$ 1 1 9-bit UARTVariable
5	SM2	**Serial port Mode 2 bit / Multiprocessor Communication Enable bit** Clear to disable multiprocessor communication feature. Set to enable multiprocessor communication feature in mode 2 and 3.
4	REN	**Reception Enable bit** Clear to disable serial reception. Set to enable serial reception.
3	TB8	**Transmitter Bit 8 / Ninth bit to transmit in modes 2 and 3** Clear to transmit a logic 0 in the 9th bit. Set to transmit a logic 1 in the 9th bit.
2	RB8	**Receiver Bit 8 / Ninth bit received in modes 2 and 3** Cleared by hardware if 9th bit received is a logic 0. Set by hardware if 9th bit received is a logic 1.
1	TI	**Transmit Interrupt flag** Clear to acknowledge interrupt. Set by hardware at the end of the 8th bit time in mode 0 or at the beginning of the stop bit in the other modes.
0	RI	**Receive Interrupt flag** Clear to acknowledge interrupt. Set by hardware at the end of the 8th bit time in mode 0, see Figure 35. and Figure 36. in the other modes.

Reset Value = 0000 0000b
Bit addressable

Figure 37. SCON Register

SADEN (S:B9h)
Slave Address Mask Register

7	6	5	4	3	2	1	0

Bit Number	Bit Mnemonic	Description
7-0		**Mask Data for Slave Individual Address**

Reset Value = 0000 0000b
Not bit addressable

Figure 38. SADEN Register

SADDR (S:A9h)
Slave Address Register

7	6	5	4	3	2	1	0

Bit Number	Bit Mnemonic	Description
7-0		**Slave Individual Address**

Reset Value = 0000 0000b
Not bit addressable

Figure 39. SADDR Register

SBUF (S:99h)
Serial Data Buffer

7	6	5	4	3	2	1	0

Bit Number	Bit Mnemonic	Description
7-0		**Data sent/received by Serial I/O Port**

Reset Value = 0000 0000b
Not bit addressable

Figure 40. SBUF Register

PCON (S:87h)
Power Control Register

7	6	5	4	3	2	1	0
SMOD1	**SMOD0**	**-**	**POF**	**GF1**	**GF0**	**PD**	**IDL**

Bit Number	Bit Mnemonic	Description
7	SMOD1	**Serial port Mode bit 1** Set to select double baud rate in mode 1, 2 or 3.
6	SMOD0	**Serial port Mode bit 0** Clear to select SM0 bit in SCON register. Set to select FE bit in SCON register.
5	-	**Reserved** The value read from this bit is indeterminate. Do not set this bit.
4	POF	**Power-Off Flag** Clear to recognize next reset type. Set by hardware when VCC rises from 0 to its nominal voltage. Can also be set by software.
3	GF1	**General purpose Flag** Cleared by user for general purpose usage. Set by user for general purpose usage.
2	GF0	**General purpose Flag** Cleared by user for general purpose usage. Set by user for general purpose usage.
1	PD	**Power-Down mode bit** Cleared by hardware when reset occurs. Set to enter power-down mode.
0	IDL	**Idle mode bit** Clear by hardware when interrupt or reset occurs. Set to enter idle mode.

Reset Value = 00X1 0000b
Not bit addressable

Figure 41. PCON Register

12. Timers/Counters

12.1. Introduction

The T89C51AC2 implements two general-purpose, 16-bit Timers/Counters. They are identified as Timer 0 and Timer 1, and can be independently configured to operate in a variety of modes as a Timer or as an event Counter. When operating as a Timer, the Timer/Counter runs for a programmed length of time, then issues an interrupt request. When operating as a Counter, the Timer/Counter counts negative transitions on an external pin. After a preset number of counts, the Counter issues an interrupt request.
The various operating modes of each Timer/Counter are described in the following sections.

12.2. Timer/Counter Operations

For instance, a basic operation is Timer registers THx and TLx (x= 0, 1) connected in cascade to form a 16-bit Timer. Setting the run control bit (TRx) in TCON register (see Figure 47) turns the Timer on by allowing the selected input to increment TLx. When TLx overflows it increments THx; when THx overflows it sets the Timer overflow flag (TFx) in TCON register. Setting the TRx does not clear the THx and TLx Timer registers. Timer registers can be accessed to obtain the current count or to enter preset values. They can be read at any time but TRx bit must be cleared to preset their values, otherwise the behavior of the Timer/Counter is unpredictable.

The C/Tx# control bit selects Timer operation or Counter operation by selecting the divided-down peripheral clock or external pin Tx as the source for the counted signal. TRx bit must be cleared when changing the mode of operation, otherwise the behavior of the Timer/Counter is unpredictable.
For Timer operation (C/Tx#= 0), the Timer register counts the divided-down peripheral clock. The Timer register is incremented once every peripheral cycle (6 peripheral clock periods). The Timer clock rate is F_{PER} / 6, i.e. F_{OSC} / 12 in standard mode or F_{OSC} / 6 in X2 mode.
For Counter operation (C/Tx#= 1), the Timer register counts the negative transitions on the Tx external input pin. The external input is sampled every peripheral cycles. When the sample is high in one cycle and low in the next one, the Counter is incremented. Since it takes 2 cycles (12 peripheral clock periods) to recognize a negative transition, the maximum count rate is F_{PER} / 12, i.e. F_{OSC} / 24 in standard mode or F_{OSC} / 12 in X2 mode. There are no restrictions on the duty cycle of the external input signal, but to ensure that a given level is sampled at least once before it changes, it should be held for at least one full peripheral cycle.

12.3. Timer 0

Timer 0 functions as either a Timer or event Counter in four modes of operation. Figure 42 to Figure 45 show the logical configuration of each mode.

Timer 0 is controlled by the four lower bits of TMOD register (see Figure 48) and bits 0, 1, 4 and 5 of TCON register (see Figure 47). TMOD register selects the method of Timer gating (GATE0), Timer or Counter operation (T/C0#) and mode of operation (M10 and M00). TCON register provides Timer 0 control functions: overflow flag (TF0), run control bit (TR0), interrupt flag (IE0) and interrupt type control bit (IT0).
For normal Timer operation (GATE0= 0), setting TR0 allows TL0 to be incremented by the selected input. Setting GATE0 and TR0 allows external pin INT0# to control Timer operation.
Timer 0 overflow (count rolls over from all 1s to all 0s) sets TF0 flag generating an interrupt request.
It is important to stop Timer/Counter before changing mode.

12.3.1. Mode 0 (13-bit Timer)

Mode 0 configures Timer 0 as an 13-bit Timer which is set up as an 8-bit Timer (TH0 register) with a modulo 32 prescaler implemented with the lower five bits of TL0 register (see Figure 42). The upper three bits of TL0 register are indeterminate and should be ignored. Prescaler overflow increments TH0 register.

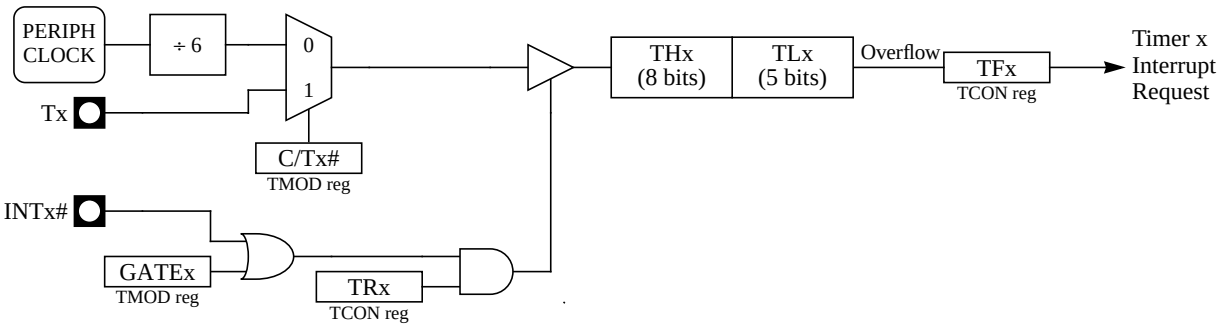

Figure 42. Timer/Counter x (x= 0 or 1) in Mode 0

12.3.2. Mode 1 (16-bit Timer)

Mode 1 configures Timer 0 as a 16-bit Timer with TH0 and TL0 registers connected in cascade (see Figure 43). The selected input increments TL0 register.

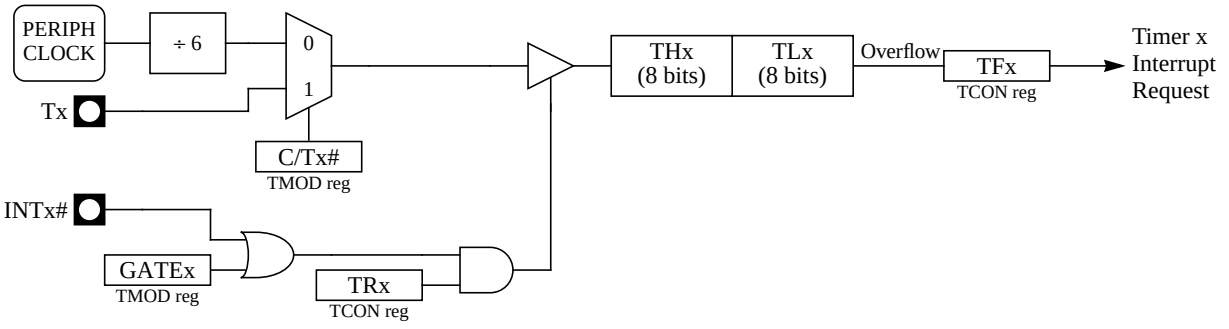

Figure 43. Timer/Counter x (x= 0 or 1) in Mode 1

12.3.3. Mode 2 (8-bit Timer with Auto-Reload)

Mode 2 configures Timer 0 as an 8-bit Timer (TL0 register) that automatically reloads from TH0 register (see Figure 44). TL0 overflow sets TF0 flag in TCON register and reloads TL0 with the contents of TH0, which is preset by software. When the interrupt request is serviced, hardware clears TF0. The reload leaves TH0 unchanged. The next reload value may be changed at any time by writing it to TH0 register.

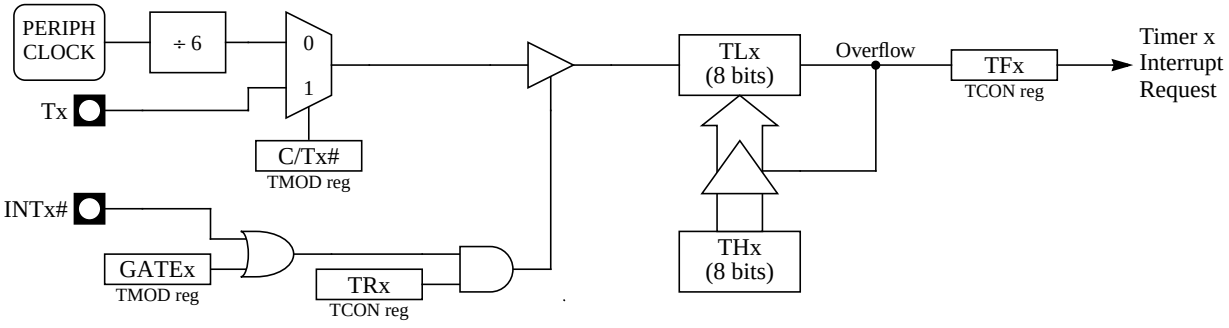

Figure 44. Timer/Counter x (x= 0 or 1) in Mode 2

12.3.4. Mode 3 (Two 8-bit Timers)

Mode 3 configures Timer 0 such that registers TL0 and TH0 operate as separate 8-bit Timers (see Figure 45). This mode is provided for applications requiring an additional 8-bit Timer or Counter. TL0 uses the Timer 0 control bits C/T0# and GATE0 in TMOD register, and TR0 and TF0 in TCON register in the normal manner. TH0 is locked into a Timer function (counting F_{PER} /6) and takes over use of the Timer 1 interrupt (TF1) and run control (TR1) bits. Thus, operation of Timer 1 is restricted when Timer 0 is in mode 3.

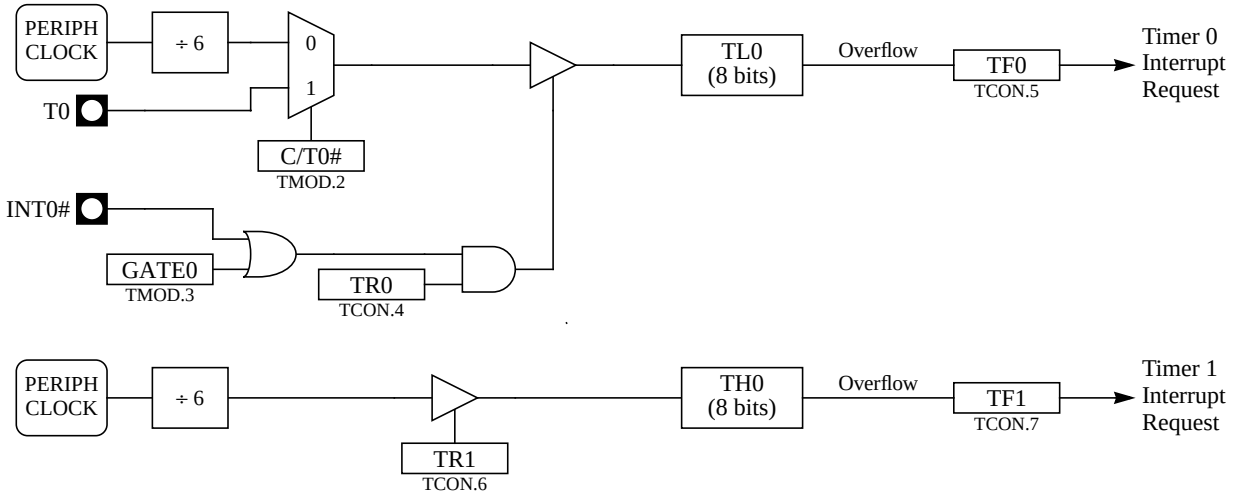

Figure 45. Timer/Counter 0 in Mode 3: Two 8-bit Counters

12.4. Timer 1

Timer 1 is identical to Timer 0 excepted for Mode 3 which is a hold-count mode. Following comments help to understand the differences:

- Timer 1 functions as either a Timer or event Counter in three modes of operation. Figure 42 to Figure 44 show the logical configuration for modes 0, 1, and 2. Timer 1's mode 3 is a hold-count mode.
- Timer 1 is controlled by the four high-order bits of TMOD register (see Figure 48) and bits 2, 3, 6 and 7 of TCON register (see Figure 47). TMOD register selects the method of Timer gating (GATE1), Timer or Counter operation (C/T1#) and mode of operation (M11 and M01). TCON register provides Timer 1 control functions: overflow flag (TF1), run control bit (TR1), interrupt flag (IE1) and interrupt type control bit (IT1).
- Timer 1 can serve as the Baud Rate Generator for the Serial Port. Mode 2 is best suited for this purpose.
- For normal Timer operation (GATE1= 0), setting TR1 allows TL1 to be incremented by the selected input. Setting GATE1 and TR1 allows external pin INT1# to control Timer operation.
- Timer 1 overflow (count rolls over from all 1s to all 0s) sets the TF1 flag generating an interrupt request.
- When Timer 0 is in mode 3, it uses Timer 1's overflow flag (TF1) and run control bit (TR1). For this situation, use Timer 1 only for applications that do not require an interrupt (such as a Baud Rate Generator for the Serial Port) and switch Timer 1 in and out of mode 3 to turn it off and on.
- It is important to stop Timer/Counter before changing mode.

12.4.1. Mode 0 (13-bit Timer)

Mode 0 configures Timer 1 as a 13-bit Timer, which is set up as an 8-bit Timer (TH1 register) with a modulo-32 prescaler implemented with the lower 5 bits of the TL1 register (see Figure 42). The upper 3 bits of TL1 register are ignored. Prescaler overflow increments TH1 register.

12.4.2. Mode 1 (16-bit Timer)

Mode 1 configures Timer 1 as a 16-bit Timer with TH1 and TL1 registers connected in cascade (see Figure 43). The selected input increments TL1 register.

12.4.3. Mode 2 (8-bit Timer with Auto-Reload)

Mode 2 configures Timer 1 as an 8-bit Timer (TL1 register) with automatic reload from TH1 register on overflow (see Figure 44). TL1 overflow sets TF1 flag in TCON register and reloads TL1 with the contents of TH1, which is preset by software. The reload leaves TH1 unchanged.

12.4.4. Mode 3 (Halt)

Placing Timer 1 in mode 3 causes it to halt and hold its count. This can be used to halt Timer 1 when TR1 run control bit is not available i.e. when Timer 0 is in mode 3.

12.5. Interrupt

Each Timer handles one interrupt source that is the timer overflow flag TF0 or TF1. This flag is set every time an overflow occurs. Flags are cleared when vectoring to the Timer interrupt routine. Interrupts are enabled by setting ETx bit in IEN0 register. This assumes interrupts are globally enabled by setting EA bit in IEN0 register.

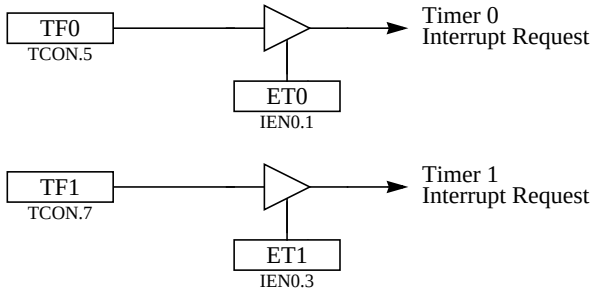

Figure 46. Timer Interrupt System

12.6. Registers

TCON (S:88h)
Timer/Counter Control Register.

7	6	5	4	3	2	1	0
TF1	**TR1**	**TF0**	**TR0**	**IE1**	**IT1**	**IE0**	**IT0**

Bit Number	Bit Mnemonic	Description
7	TF1	**Timer 1 Overflow Flag** Cleared by hardware when processor vectors to interrupt routine. Set by hardware on Timer/Counter overflow, when Timer 1 register overflows.
6	TR1	**Timer 1 Run Control Bit** Clear to turn off Timer/Counter 1. Set to turn on Timer/Counter 1.
5	TF0	**Timer 0 Overflow Flag** Cleared by hardware when processor vectors to interrupt routine. Set by hardware on Timer/Counter overflow, when Timer 0 register overflows.
4	TR0	**Timer 0 Run Control Bit** Clear to turn off Timer/Counter 0. Set to turn on Timer/Counter 0.
3	IE1	**Interrupt 1 Edge Flag** Cleared by hardware when interrupt is processed if edge-triggered (see IT1). Set by hardware when external interrupt is detected on INT1# pin.
2	IT1	**Interrupt 1 Type Control Bit** Clear to select low level active (level triggered) for external interrupt 1 (INT1#). Set to select falling edge active (edge triggered) for external interrupt 1.
1	IE0	**Interrupt 0 Edge Flag** Cleared by hardware when interrupt is processed if edge-triggered (see IT0). Set by hardware when external interrupt is detected on INT0# pin.
0	IT0	**Interrupt 0 Type Control Bit** Clear to select low level active (level triggered) for external interrupt 0 (INT0#). Set to select falling edge active (edge triggered) for external interrupt 0.

Reset Value= 0000 0000b

Figure 47. TCON Register

TMOD (S:89h)
Timer/Counter Mode Control Register.

7	6	5	4	3	2	1	0
GATE1	C/T1#	M11	M01	GATE0	C/T0#	M10	M00

Bit Number	Bit Mnemonic	Description
7	GATE1	**Timer 1 Gating Control Bit** Clear to enable Timer 1 whenever TR1 bit is set. Set to enable Timer 1 only while INT1# pin is high and TR1 bit is set.
6	C/T1#	**Timer 1 Counter/Timer Select Bit** Clear for Timer operation: Timer 1 counts the divided-down system clock. Set for Counter operation: Timer 1 counts negative transitions on external pin T1.
5 4	M11 M01	**Timer 1 Mode Select Bits** M11 M01 Operating mode 0 0 Mode 0: 8-bit Timer/Counter (TH1) with 5-bit prescaler (TL1). 0 1 Mode 1: 16-bit Timer/Counter. 1 0 Mode 2: 8-bit auto-reload Timer/Counter (TL1). Reloaded from TH1 at overflow. 1 1 Mode 3: Timer 1 halted. Retains count.
3	GATE0	**Timer 0 Gating Control Bit** Clear to enable Timer 0 whenever TR0 bit is set. Set to enable Timer/Counter 0 only while INT0# pin is high and TR0 bit is set.
2	C/T0#	**Timer 0 Counter/Timer Select Bit** Clear for Timer operation: Timer 0 counts the divided-down system clock. Set for Counter operation: Timer 0 counts negative transitions on external pin T0.
1 0	M10 M00	**Timer 0 Mode Select Bit** M10 M00 Operating mode 0 0 Mode 0: 8-bit Timer/Counter (TH0) with 5-bit prescaler (TL0). 0 1 Mode 1: 16-bit Timer/Counter. 1 0 Mode 2: 8-bit auto-reload Timer/Counter (TL0). Reloaded from TH0 at overflow. 1 1 Mode 3: TL0 is an 8-bit Timer/Counter. TH0 is an 8-bit Timer using Timer 1's TR0 and TF0 bits.

Reset Value= 0000 0000b

Figure 48. TMOD Register

TH0 (S:8Ch)
Timer 0 High Byte Register.

7	6	5	4	3	2	1	0

Bit Number	Bit Mnemonic	Description
7:0		**High Byte of Timer 0.**

Reset Value= 0000 0000b

Figure 49. TH0 Register

TL0 (S:8Ah)

Timer 0 Low Byte Register.

7	6	5	4	3	2	1	0

Bit Number	Bit Mnemonic	Description
7:0		**Low Byte of Timer 0.**

Reset Value= 0000 0000b

Figure 50. TL0 Register

TH1 (S:8Dh)

Timer 1 High Byte Register.

7	6	5	4	3	2	1	0

Bit Number	Bit Mnemonic	Description
7:0		**High Byte of Timer 1.**

Reset Value= 0000 0000b

Figure 51. TH1 Register

TL1 (S:8Bh)

Timer 1 Low Byte Register.

7	6	5	4	3	2	1	0

Bit Number	Bit Mnemonic	Description
7:0		**Low Byte of Timer 1.**

Reset Value= 0000 0000b

Figure 52. TL1 Register

13. Timer 2

13.1. Introduction

The T89C51AC2 timer 2 is compatible with timer 2 in the 80C52.
It is a 16-bit timer/counter: the count is maintained by two eight-bit timer registers, TH2 and TL2 that are cascade-connected. It is controlled by T2CON register (See Table 55) and T2MOD register (See Table 56). Timer 2 operation is similar to Timer 0 and Timer 1. C/$\overline{T2}$ selects $F_{OSC}/6$ (timer operation) or external pin T2 (counter operation) as timer register input. Setting TR2 allows TL2 to be incremented by the selected input.

Timer 2 includes the following enhancements:

- Auto-reload mode (up or down counter)
- Programmable clock-output

13.2. Auto-Reload Mode

The auto-reload mode configures timer 2 as a 16-bit timer or event counter with automatic reload. This feature is controlled by the DCEN bit in T2MOD register (See Table 56). Setting the DCEN bit enables timer 2 to count up or down as shown in Figure 53. In this mode the T2EX pin controls the counting direction.

When T2EX is high, timer 2 up-counts. Timer overflow occurs at FFFFh which sets the TF2 flag and generates an interrupt request. The overflow also causes the 16-bit value in RCAP2H and RCAP2L registers to be loaded into the timer registers TH2 and TL2.

When T2EX is low, timer 2 down-counts. Timer underflow occurs when the count in the timer registers TH2 and TL2 equals the value stored in RCAP2H and RCAP2L registers. The underflow sets TF2 flag and reloads FFFFh into the timer registers.

The EXF2 bit toggles when timer 2 overflow or underflow, depending on the direction of the count. EXF2 does not generate an interrupt. This bit can be used to provide 17-bit resolution.

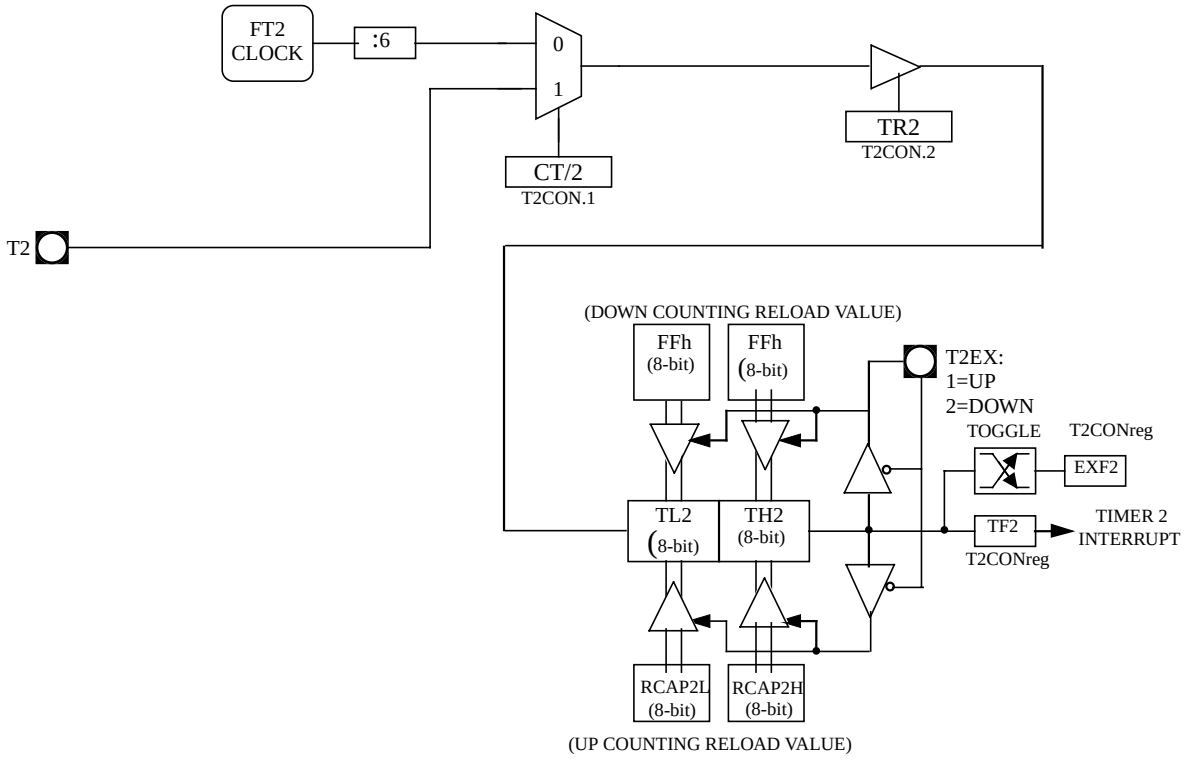

Figure 53. Auto-Reload Mode Up/Down Counter

13.3. Programmable Clock-Output

In clock-out mode, timer 2 operates as a 50%-duty-cycle, programmable clock generator (See Figure 54). The input clock increments TL2 at frequency $F_{OSC}/2$. The timer repeatedly counts to overflow from a loaded value. At overflow, the contents of RCAP2H and RCAP2L registers are loaded into TH2 and TL2. In this mode, timer 2 overflows do not generate interrupts. The formula gives the clock-out frequency depending on the system oscillator frequency and the value in the RCAP2H and RCAP2L registers:

$$Clock-OutFrequency = \frac{F_{osc} \times 2^{x2}}{4 \times (65536 - RCAP2H/RCAP2L)}$$

NOTE: X2 bit is located in CKCON register.
In X2 mode, $F_{OSC}=F_{XTAL}$. In standard mode, $F_{OSC}=F_{XTAL}/2$.

For a 16 MHz system clock, timer 2 has a programmable frequency range of 61 Hz ($F_{OSC}/2^{16)}$ to 4 MHz (F_{OSC}/ 4). The generated clock signal is brought out to T2 pin (P1.0).

Timer 2 is programmed for the clock-out mode as follows:

- Set T2OE bit in T2MOD register.
- Clear C/$\overline{T2}$ bit in T2CON register.
- Determine the 16-bit reload value from the formula and enter it in RCAP2H/RCAP2L registers.

- Enter a 16-bit initial value in timer registers TH2/TL2. It can be the same as the reload value or different depending on the application.
- To start the timer, set TR2 run control bit in T2CON register.

It is possible to use timer 2 as a baud rate generator and a clock generator simultaneously. For this configuration, the baud rates and clock frequencies are not independent since both functions use the values in the RCAP2H and RCAP2L registers.

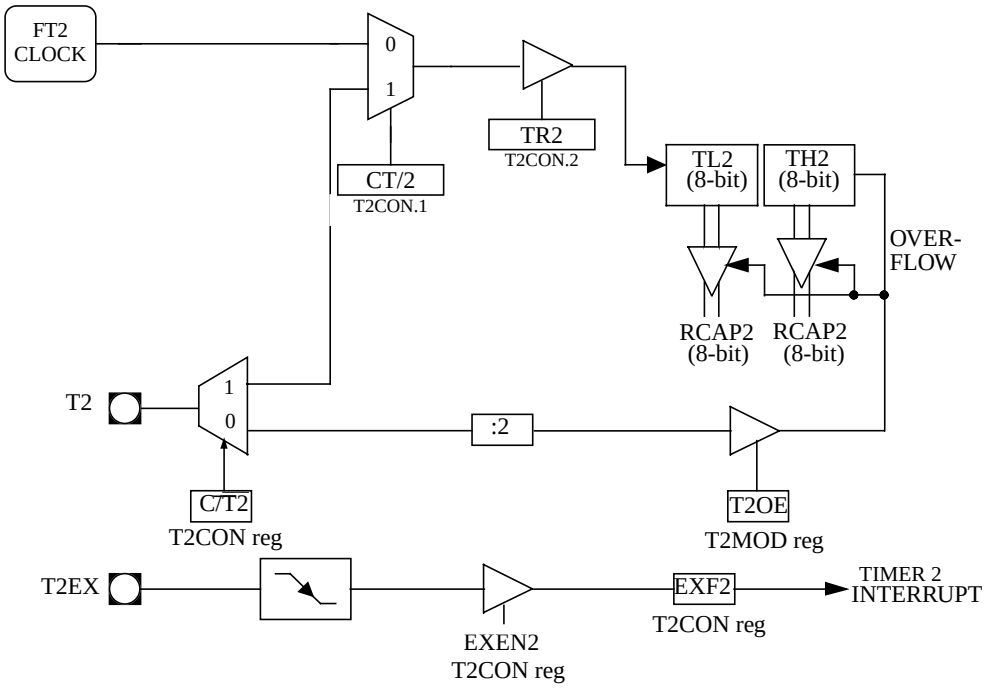

Figure 54. Clock-Out Mode

Preview - Confidential

13.4. Registers

T2CON (S:C8h)
Timer 2 Control Register

7	6	5	4	3	2	1	0
TF2	EXF2	RCLK	TCLK	EXEN2	TR2	C/T2#	CP/RL2#

Bit Number	Bit Mnemonic	Description
7	TF2	**Timer 2 overflow Flag** TF2 is not set if RCLK=1 or TCLK = 1. Must be cleared by software. Set by hardware on timer 2 overflow.
6	EXF2	**Timer 2 External Flag** Set when a capture or a reload is caused by a negative transition on T2EX pin if EXEN2=1. Set to cause the CPU to vector to timer 2 interrupt routine when timer 2 interrupt is enabled. Must be cleared by software.
5	RCLK	**Receive Clock bit** Clear to use timer 1 overflow as receive clock for serial port in mode 1 or 3. Set to use timer 2 overflow as receive clock for serial port in mode 1 or 3.
4	TCLK	**Transmit Clock bit** Clear to use timer 1 overflow as transmit clock for serial port in mode 1 or 3. Set to use timer 2 overflow as transmit clock for serial port in mode 1 or 3.
3	EXEN2	**Timer 2 External Enable bit** Clear to ignore events on T2EX pin for timer 2 operation. Set to cause a capture or reload when a negative transition on T2EX pin is detected, if timer 2 is not used to clock the serial port.
2	TR2	**Timer 2 Run control bit** Clear to turn off timer 2. Set to turn on timer 2.
1	C/T2#	**Timer/Counter 2 select bit** Clear for timer operation (input from internal clock system: F_{OSC}). Set for counter operation (input from T2 input pin).
0	CP/RL2#	**Timer 2 Capture/Reload bit** If RCLK=1 or TCLK=1, CP/RL2# is ignored and timer is forced to auto-reload on timer 2 overflow. Clear to auto-reload on timer 2 overflows or negative transitions on T2EX pin if EXEN2=1. Set to capture on negative transitions on T2EX pin if EXEN2=1.

Reset Value = 0000 0000b
Bit addressable

Figure 55. T2CON Register

T2MOD (S:C9h)
Timer 2 Mode Control Register

7	6	5	4	3	2	1	0
-	-	-	-	-	-	T2OE	DCEN

Bit Number	Bit Mnemonic	Description
7	-	**Reserved** The value read from this bit is indeterminate. Do not set this bit.
6	-	**Reserved** The value read from this bit is indeterminate. Do not set this bit.
5	-	**Reserved** The value read from this bit is indeterminate. Do not set this bit.
4	-	**Reserved** The value read from this bit is indeterminate. Do not set this bit.
3	-	**Reserved** The value read from this bit is indeterminate. Do not set this bit.
2	-	**Reserved** The value read from this bit is indeterminate. Do not set this bit.
1	T2OE	**Timer 2 Output Enable bit** Clear to program P1.0/T2 as clock input or I/O port. Set to program P1.0/T2 as clock output.
0	DCEN	**Down Counter Enable bit** Clear to disable timer 2 as up/down counter. Set to enable timer 2 as up/down counter.

Reset Value = XXXX XX00b
Not bit addressable

Figure 56. T2MOD Register

TH2 (S:CDh)
Timer 2 High Byte Register

7	6	5	4	3	2	1	0
-	-	-	-	-	-	-	-

Bit Number	Bit Mnemonic	Description
7-0		High Byte of Timer 2.

Reset Value = 0000 0000b
Not bit addressable

Figure 57. TH2 Register

TL2 (S:CCh)
Timer 2 Low Byte Register

7	6	5	4	3	2	1	0
-	-	-	-	-	-	-	-

Bit Number	Bit Mnemonic	Description
7-0		**Low Byte of Timer 2.**

Reset Value = 0000 0000b
Not bit addressable

Figure 58. TL2 Register

RCAP2H (S:CBh)
Timer 2 Reload/Capture High Byte Register

7	6	5	4	3	2	1	0
-	-	-	-	-	-	-	-

Bit Number	Bit Mnemonic	Description
7-0		**High Byte of Timer 2 Reload/Capture.**

Reset Value = 0000 0000b
Not bit addressable

Figure 59. RCAP2H Register

RCAP2L (S:CAh)
Timer 2 Reload/Capture Low Byte Register

7	6	5	4	3	2	1	0
-	-	-	-	-	-	-	-

Bit Number	Bit Mnemonic	Description
7-0		**Low Byte of Timer 2 Reload/Capture.**

Reset Value = 0000 0000b
Not bit addressable

Figure 60. RCAP2L Register

14. WatchDog Timer

14.1. Introduction

T89C51AC2 contains a powerful programmable hardware WatchDog Timer (WDT) that automatically resets the chip if it software fails to reset the WDT before the selected time interval has elapsed. It permits large Time-Out ranking from 16ms to 2s @Fosc = 12MHz.

This WDT consist of a 14-bit counter plus a 7-bit programmable counter, a WatchDog Timer reset register (WDTRST) and a WatchDog Timer programming (WDTPRG) register. When exiting reset, the WDT is -by default- disable. To enable the WDT, the user has to write the sequence 1EH and E1H into WDTRST register. When the WatchDog Timer is enabled, it will increment every machine cycle while the oscillator is running and there is no way to disable the WDT except through reset (either hardware reset or WDT overflow reset). When WDT overflows, it will generate an output RESET pulse at the RST pin. The RESET pulse duration is $96xT_{OSC}$, where $T_{OSC}=1/F_{OSC}$. To make the best use of the WDT, it should be serviced in those sections of code that will periodically be executed within the time required to prevent a WDT reset.

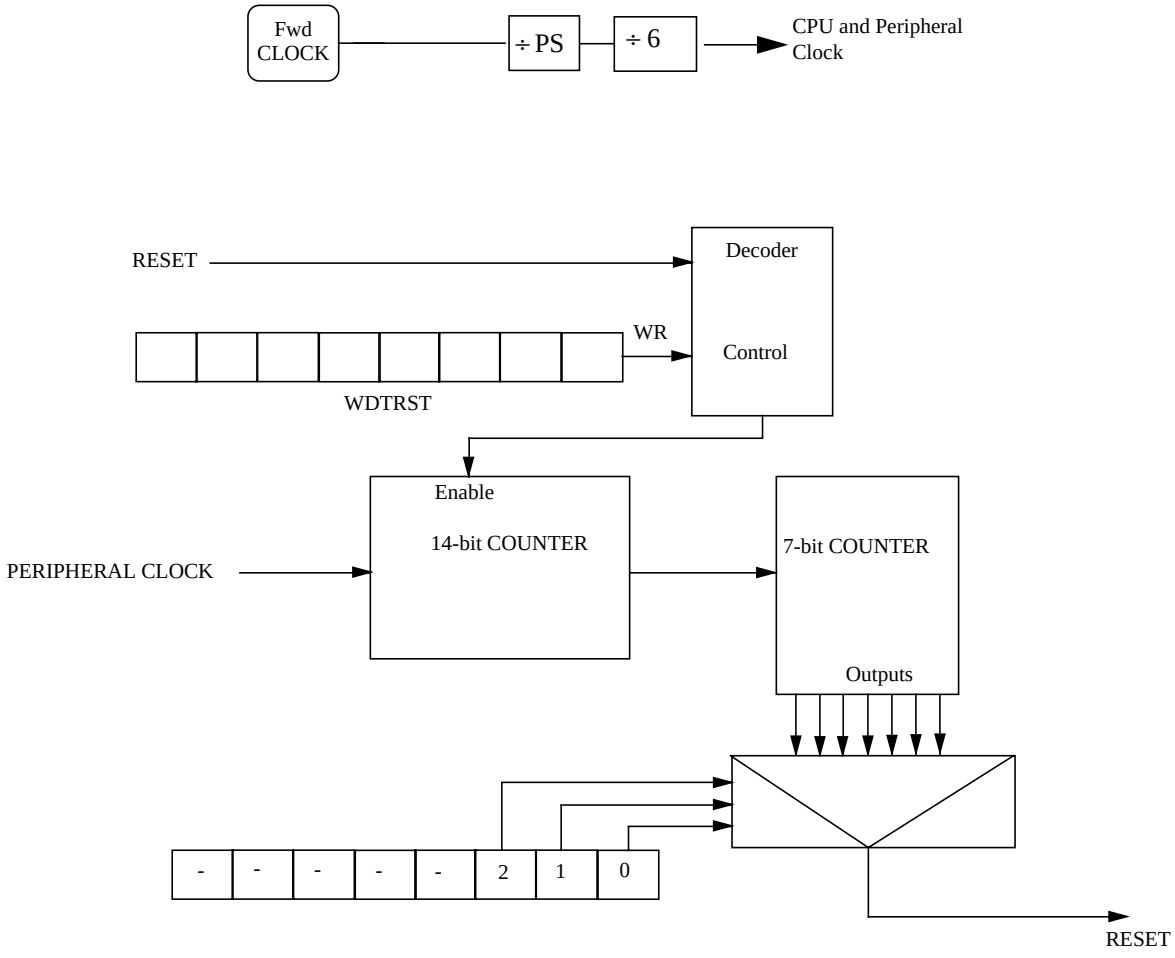

Figure 61. WatchDog Timer

14.2. WatchDog Programming

The three lower bits (S0, S1, S2) located into WDTPRG register permits to program the WDT duration.

Table 19. Machine Cycle Count

S2	S1	S0	Machine Cycle Count
0	0	0	2^{14} - 1
0	0	1	2^{15} - 1
0	1	0	2^{16} - 1
0	1	1	2^{17} - 1
1	0	0	2^{18} - 1
1	0	1	2^{19} - 1
1	1	0	2^{20} - 1
1	1	1	2^{21} - 1

To compute WD Time-Out, the following formula is applied:

$$FTime-Out = \frac{F_{XTAL}}{12 \times ((2^{14} \times 2^{Svalue}) - 1)}$$

Note: Svalue represents the decimal value of (S2 S1 S0)

Find Hereafter computed Time-Out value for $Fosc_{XTAL}$ = 12MHz

Table 20. Time-Out Computation

S2	S1	S0	Fosc=12MHz	Fosc=16MHz	Fosc=20MHz
0	0	0	16.38 ms	12.28 ms	9.82 ms
0	0	1	32.77 ms	24.57 ms	19.66 ms
0	1	0	65.54 ms	49.14 ms	39.32 ms
0	1	1	131.07 ms	98.28 ms	78.64 ms
1	0	0	262.14 ms	196.56 ms	157.28 ms
1	0	1	524.29 ms	393.12 ms	314.56 ms
1	1	0	1.05 s	786.24 ms	629.12 ms
1	1	1	2.10 s	1.57 s	1.25 ms

14.3. WatchDog Timer during Power down mode and Idle

In Power Down mode the oscillator stops, which means the WDT also stops. While in Power Down mode the user does not need to service the WDT. There are 2 methods of exiting Power Down mode: by a hardware reset or via a level activated external interrupt which is enabled prior to entering Power Down mode. When Power Down is exited with hardware reset, servicing the WDT should occur as it normally does whenever T89C51AC2 is reset. Exiting Power Down with an interrupt is significantly different. The interrupt is held low long enough for the oscillator to stabilize. When the interrupt is brought high, the interrupt is serviced. To prevent the WDT from resetting the device while the interrupt pin is held low, the WDT is not started until the interrupt is pulled high. It is suggested that the WDT be reset during the interrupt service for the interrupt used to exit Power Down.
To ensure that the WDT does not overflow within a few states of exiting of powerdown, it is best to reset the WDT just before entering powerdown.
In the Idle mode, the oscillator continues to run. To prevent the WDT from resetting T89C51AC2 while in Idle mode, the user should always set up a timer that will periodically exit Idle, service the WDT, and re-enter Idle mode.

14.4. Register

WDTPRG (S:A7h)
WatchDog Timer Duration Programming register

7	6	5	4	3	2	1	0
-	-	-	-	-	S2	S1	S0

Bit Number	Bit Mnemonic	Description
7	-	**Reserved** The value read from this bit is indeterminate. Do not set this bit.
6	-	**Reserved** The value read from this bit is indeterminate. Do not set this bit.
5	-	**Reserved** The value read from this bit is indeterminate. Do not set this bit.
4	-	**Reserved** The value read from this bit is indeterminate. Do not set this bit.
3	-	**Reserved** The value read from this bit is indeterminate. Do not set this bit.
2	S2	**WatchDog Timer Duration selection bit 2** Work in conjunction with bit 1 and bit 0.
1	S1	**WatchDog Timer Duration selection bit 1** Work in conjunction with bit 2 and bit 0.
0	S0	**WatchDog Timer Duration selection bit 0** Work in conjunction with bit 1 and bit 2.

Reset Value = XXXX X000b

Figure 62. WDTPRG Register

WDTRST (S:A6h Write only)
WatchDog Timer Enable register

7	6	5	4	3	2	1	0
-	-	-	-	-	-	-	-

Bit Number	Bit Mnemonic	Description
7	-	**Watchdog Control Value**

Reset Value = 1111 1111b

NOTE:
The WDRST register is used to reset/enable the WDT by writing 1EH then E1H in sequence.

.

Figure 63. WDTRST Register

15. Programmable Counter Array PCA

15.1. Introduction

The PCA provides more timing capabilities with less CPU intervention than the standard timer/counters. Its advantages include reduced software overhead and improved accuracy. The PCA consists of a dedicated timer/counter which serves as the time base for an array of five compare/capture modules. Its clock input can be programmed to count any of the following signals:

- PCA clock frequency / 6
- PCA clock frequency / 2
- Timer 0 overflow
- External input on ECI (P1.2)

Each compare/capture modules can be programmed in any one of the following modes:

- rising and/or trailing edge capture,
- software timer,
- high-speed output,
- pulse width modulator.

Module 4 can also be programmed as a watchdog timer. see Section "PCA Watchdog Timer".

When the compare/capture modules are programmed in capture mode, software timer, or high speed output mode, an interrupt can be generated when the module executes its function. All five modules plus the PCA timer overflow share one interrupt vector.

The PCA timer/counter and compare/capture modules share Port 1 for external I/Os. These pins are listed below. If the port is not used for the PCA, it can still be used for standard I/O.

PCA component	External I/O Pin
16-bit Counter	P1.2 / ECI
16-bit Module 0	P1.3 / CEX0
16-bit Module 1	P1.4 / CEX1
16-bit Module 2	P1.5 / CEX2
16-bit Module 3	P1.6 / CEX3
16-bit Module 4	P1.7 / CEX4

The PCA timer is a common time base for all five modules (see Figure 9). The timer count source is determined from the CPS1 and CPS0 bits in the **CMOD SFR** (see Table 8) and can be programmed to run at:

- 1/6 the PCA clock frequency.
- 1/2 the PCA clock frequency.
- the Timer 0 overflow.
- the input on the ECI pin (P1.2).

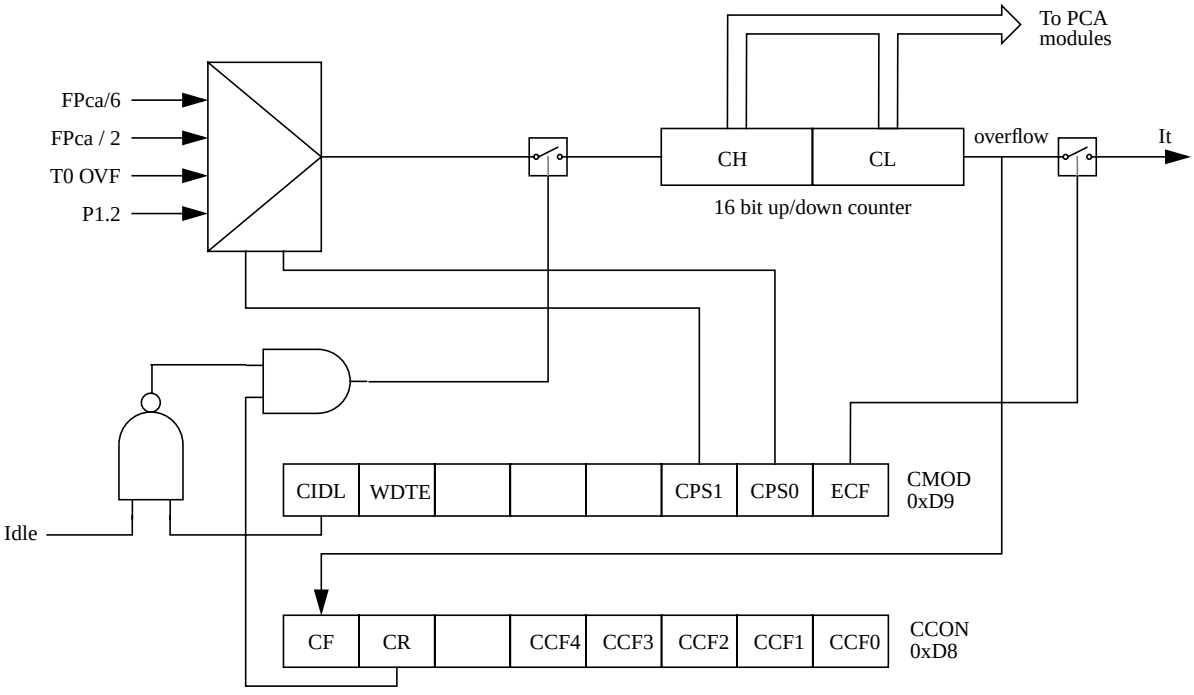

Figure 64. PCA Timer/Counter

15.2. PCA Interrupt

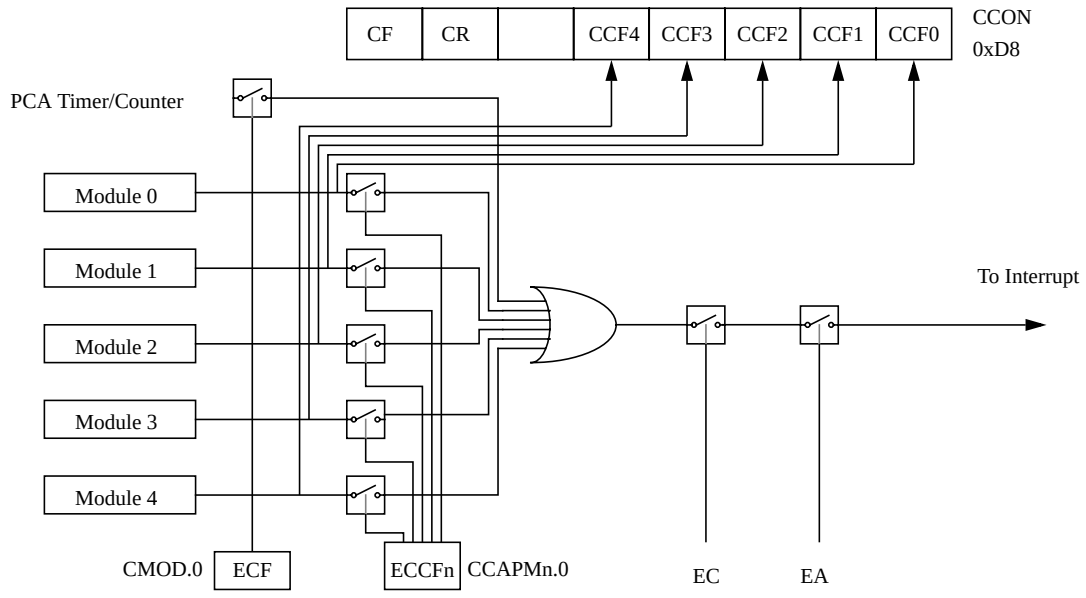

Figure 65. PCA Timer Interrupts

Preview - Confidential

15.3. PCA Capture Mode

To use one of the PCA modules in capture mode either one or both of the CCAPM bits CAPN and CAPP for that module must be set. The external CEX input for the module (on port 1) is sampled for a transition. When a valid transition occurs the PCA hardware loads the value of the PCA counter registers (CH and CL) into the module's capture registers (CCAPnL and CCAPnH). If the CCFn bit for the module in the CCON SFR and the ECCFn bit in the CCAPMn SFR are set then an interrupt will be generated.

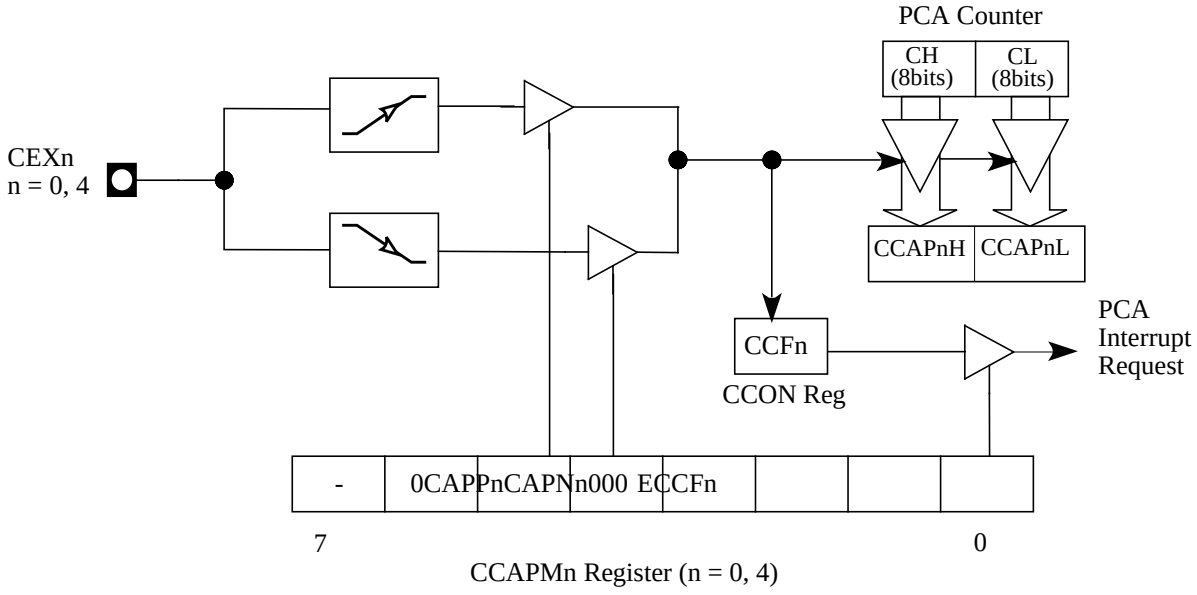

Figure 66. PCA Capture Mode

15.4. 16-bit Software Timer Mode

The PCA modules can be used as software timers by setting both the ECOM and MAT bits in the modules CCAPMn register. The PCA timer will be compared to the module's capture registers and when a match occurs an interrupt will occur if the CCFn (CCON SFR) and the ECCFn (CCAPMn SFR) bits for the module are both set.

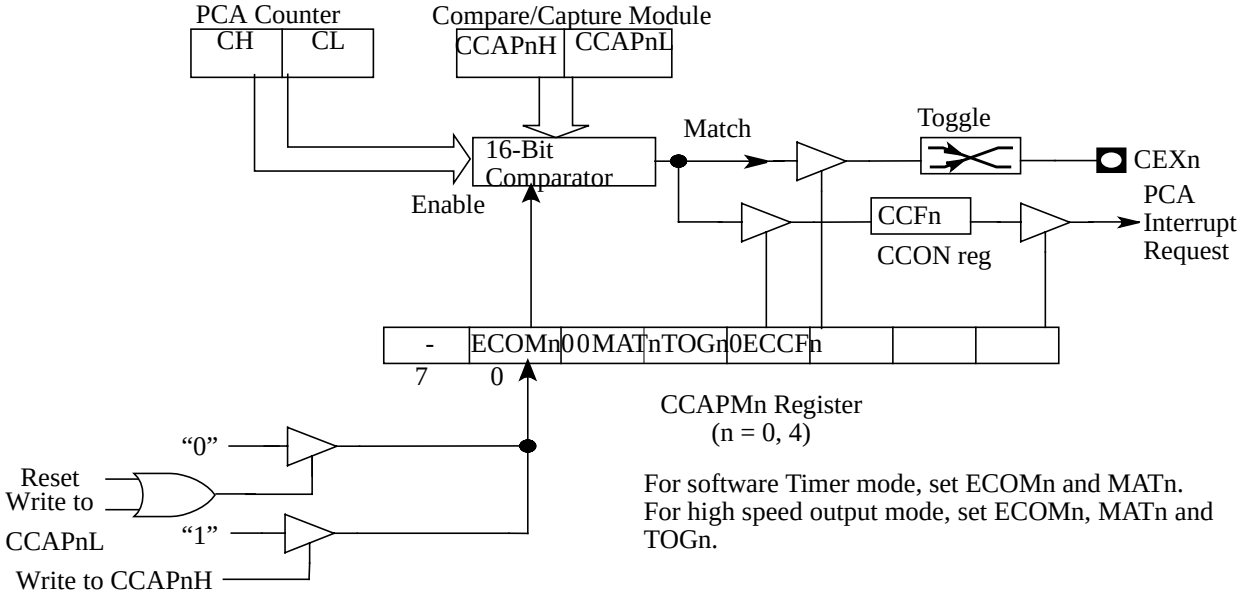

Figure 67. PCA 16-bit Software Timer and High Speed Output Mode

15.5. High Speed Output Mode

In this mode the CEX output (on port 1) associated with the PCA module will toggle each time a match occurs between the PCA counter and the module's capture registers. To activate this mode the TOG, MAT, and ECOM bits in the module's CCAPMn SFR must be set.

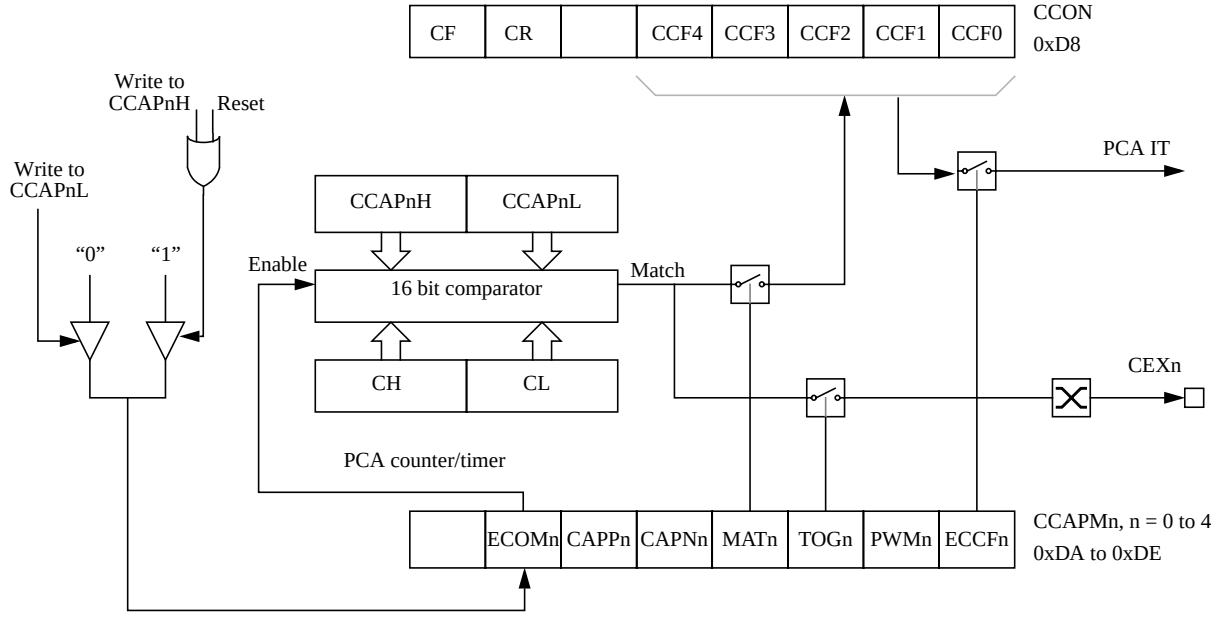

Figure 68. PCA High speed Output Mode

Preview - Confidential

15.6. Pulse Width Modulator Mode

All the PCA modules can be used as PWM outputs. The output frequency depends on the source for the PCA timer. All the modules will have the same output frequency because they all share the PCA timer. The duty cycle of each module is independently variable using the module's capture register CCAPLn. When the value of the PCA CL SFR is less than the value in the module's CCAPLn SFR the output will be low, when it is equal to or greater than it, the output will be high. When CL overflows from FF to 00, CCAPLn is reloaded with the value in CCAPHn. the allows the PWM to be updated without glitches. The PWM and ECOM bits in the module's CCAPMn register must be set to enable the PWM mode.

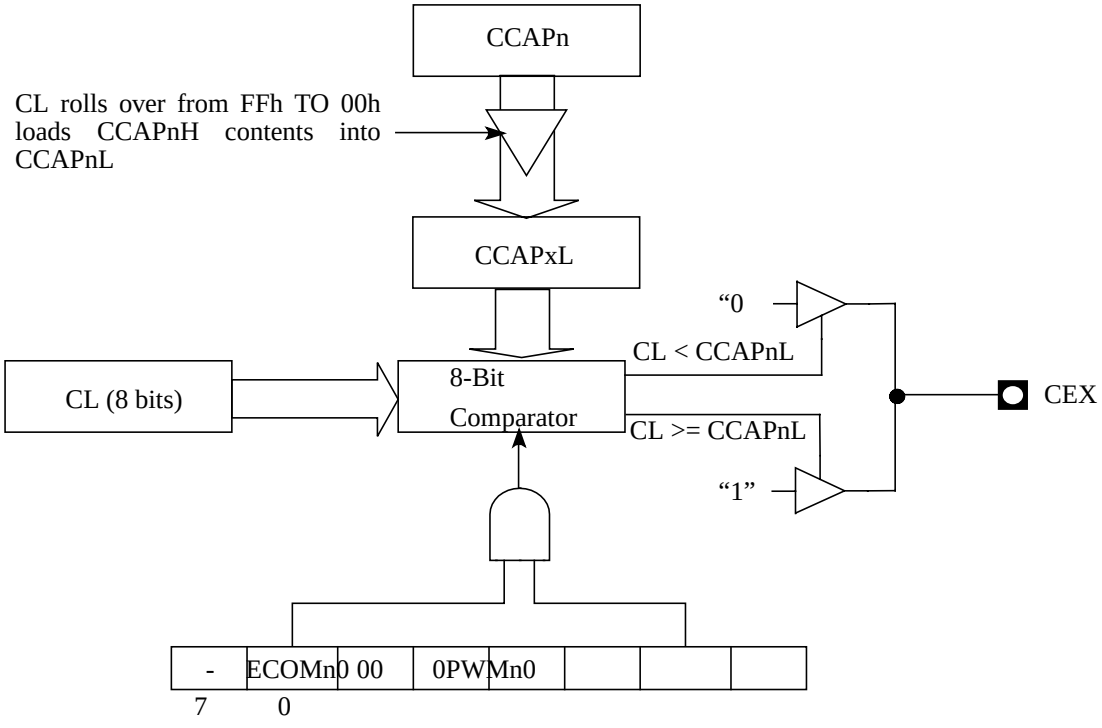

Figure 69. PCA PWM Mode

Preview - Confidential

15.7. PCA Watchdog Timer

An on-board watchdog timer is available with the PCA to improve system reliability without increasing chip count. Watchdog timers are useful for systems that are sensitive to noise, power glitches, or electrostatic discharge. Module 4 is the only PCA module that can be programmed as a watchdog. However, this module can still be used for other modes if the watchdog is not needed. The user pre-loads a 16-bit value in the compare registers. Just like the other compare modes, this 16-bit value is compared to the PCA timer value. If a match is allowed to occur, an internal reset will be generated. This will not cause the RST pin to be driven high.

To hold off the reset, the user has three options:

- 1. periodically change the compare value so it will never match the PCA timer,
- 2. periodically change the PCA timer value so it will never match the compare values, or
- 3. disable the watchdog by clearing the WDTE bit before a match occurs and then re-enable it.

The first two options are more reliable because the watchdog timer is never disabled as in option #3. If the program counter ever goes astray, a match will eventually occur and cause an internal reset. If other PCA modules are being used the second option not recommended either. Remember, the PCA timer is the time base for all modules; changing the time base for other modules would not be a good idea. Thus, in most applications the first solution is the best option.

15.8. PCA Registers

CMOD (S:D8h)
PCA Counter Mode Register

7	6	5	4	3	2	1	0
CIDL	**WDTE**	**-**	**-**	**-**	**CPS1**	**CPS0**	**ECF**

Bit Number	Bit Mnemonic	Description
7	CIDL	**PCA Counter Idle Control bit** Clear to let the PCA run during Idle mode. Set to stop the PCA when Idle mode is invoked.
6	WDTE	**Watchdog Timer Enable** Clear to disable Watchdog Timer function on PCA Module 4, Set to enable it.
5	-	**Reserved** The value read from this bit is indeterminate. Do not set this bit.
4	-	**Reserved** The value read from this bit is indeterminate. Do not set this bit.
3	-	**Reserved** The value read from this bit is indeterminate. Do not set this bit.
2	CPS1	**EWC Count Pulse Select bits** CPS1 CPS0 Clock source 0 0 Internal Clock, FPca/6 0 1 Internal Clock, FPca/2 1 0 Timer 0 overflow 1 1 External clock at ECI/P1.2 pin (Max. Rate = FPca/4)
1	CPS0	
0	ECF	**Enable PCA Counter Overflow Interrupt bit** Clear to disable CF bit in CCON register to generate an interrupt. Set to enable CF bit in CCON register to generate an interrupt.

Reset Value = 00XX X000b

Figure 70. CMOD Register

CCON (S:D8h)
PCA Counter Control Register

7	6	5	4	3	2	1	0
CF	CR	-	CCF4	CCF3	CCF2	CCF1	CCF0

Bit Number	Bit Mnemonic	Description
7	CF	**PCA Timer/Counter Overflow flag** Set by hardware when the PCA Timer/Counter rolls over. This generates a PCA interrupt request if the ECF bit in CMOD register is set. Must be cleared by software.
6	CR	**PCA Timer/Counter Run Control bit** Clear to turn the PCA Timer/Counter off. Set to turn the PCA Timer/Counter on.
5	-	**Reserved** The value read from this bit is indeterminate. Do not set this bit.
4	CCF4	**PCA Module 4 Compare/Capture flag** Set by hardware when a match or capture occurs. This generates a PCA interrupt request if the ECCF 4 bit in CCAPM 4 register is set. Must be cleared by software.
3	CCF3	**PCA Module 3 Compare/Capture flag** Set by hardware when a match or capture occurs. This generates a PCA interrupt request if the ECCF 3 bit in CCAPM 3 register is set. Must be cleared by software.
2	CCF2	**PCA Module 2 Compare/Capture flag** Set by hardware when a match or capture occurs. This generates a PCA interrupt request if the ECCF 2 bit in CCAPM 2 register is set. Must be cleared by software.
1	CCF1	**PCA Module 1 Compare/Capture flag** Set by hardware when a match or capture occurs. This generates a PCA interrupt request if the ECCF 1 bit in CCAPM 1 register is set. Must be cleared by software.
0	CCF0	**PCA Module 0 Compare/Capture flag** Set by hardware when a match or capture occurs. This generates a PCA interrupt request if the ECCF 0 bit in CCAPM 0 register is set. Must be cleared by software.

Reset Value = 00X0 0000b

Figure 71. CCON Register

CCAP0H (S:FAh)
CCAP1H (S:FBh)
CCAP2H (S:FCh)
CCAP3H (S:FDh)
CCAP4H (S:FEh)
PCA High Byte Compare/Capture Module n Register (n=0..4)

7	6	5	4	3	2	1	0
CCAPnH 7	CCAPnH 6	CCAPnH 5	CCAPnH 4	CCAPnH 3	CCAPnH 2	CCAPnH 1	CCAPnH 0

Bit Number	Bit Mnemonic	Description
7:0	CCAPnH 7:0	High byte of EWC-PCA comparison or capture values

Reset Value = 0000 0000b

Figure 72. CCAPnH Registers

CCAP0L (S: EAh)
CCAP1L (S:EBh)
CCAP2L (S:ECh)
CCAP3L (S:EDh)
CCAP4L (S:EEh)
PCA Low Byte Compare/Capture Module n Register (n=0..4)

7	6	5	4	3	2	1	0
CCAPnL 7	CCAPnL 6	CCAPnL 5	CCAPnL 4	CCAPnL 3	CCAPnL 2	CCAPnL 1	CCAPnL 0

Bit Number	Bit Mnemonic	Description
7:0	CCAPnL 7:0	Low byte of EWC-PCA comparison or capture values

Reset Value = 0000 0000b

Figure 73. CCAPnL Registers

CCAPM0 (S:DAh)
CCAPM1 (S:DBh)
CCAPM2 (S:DCh)
CCAPM3 (S:DDh)
CCAPM4 (S:DEh)
PCA Compare/Capture Module n Mode registers (n=0..4)

7	6	5	4	3	2	1	0
-	ECOMn	CAPPn	CAPNn	MATn	TOGn	PWMn	ECCFn

Bit Number	Bit Mnemonic	Description
7	-	**Reserved** The Value read from this bit is indeterminate. Do not set this bit.
6	ECOMn	**Enable Compare Mode Module x bit** Clear to disable the Compare function. Set to enable the Compare function. The Compare function is used to implement the software Timer, the high-speed output, the Pulse Width Modulator (PWM) and the Watchdog Timer (WDT).
5	CAPPn	**Capture Mode (Positive) Module x bit** Clear to disable the Capture function triggered by a positive edge on CEXx pin. Set to enable the Capture function triggered by a positive edge on CEXx pin
4	CAPNn	**Capture Mode (Negative) Module x bit** Clear to disable the Capture function triggered by a negative edge on CEXx pin. Set to enable the Capture function triggered by a negative edge on CEXx pin.
3	MATn	**Match Module x bit** Set when a match of the PCA Counter with the Compare/Capture register sets CCFx bit in CCON register, flagging an interrupt. Must be cleared by software.
2	TOGn	**Toggle Module x bit** The toggle mode is configured by setting ECOMx, MATx and TOGx bits. Set when a match of the PCA Counter with the Compare/Capture register toggles the CEXx pin. Must be cleared by software.
1	PWMn	**Pulse Width Modulation Module x Mode bit** Set to configure the module x as an 8-bit Pulse Width Modulator with output waveform on CEXx pin. Must be cleared by software.
0	ECCFn	**Enable CCFx Interrupt bit** Clear to disable CCFx bit in CCON register to generate an interrupt request. Set to enable CCFx bit in CCON register to generate an interrupt request.

Reset Value = X000 0000b

Figure 74. CCAPMn Registers

CH (S:F9h)
PCA Counter Register High value

7	6	5	4	3	2	1	0
CH 7	CH 6	CH 5	CH 4	CH 3	CH 2	CH 1	CH 0

Bit Number	Bit Mnemonic	Description
7:0	CH 7:0	High byte of Timer/Counter

Reset Value = 0000 00000b

Figure 75. CH Register

CL (S:E9h)
PCA counter Register Low value

7	6	5	4	3	2	1	0
CL 7	CL 6	CL 5	CL 4	CL 3	CL 2	CL 1	CL 0

Bit Number	Bit Mnemonic	Description
7:0	CL0 7:0	Low byte of Timer/Counter

Reset Value = 0000 00000b

Figure 76. CL Register

16. Analog-to-Digital Converter (ADC)

16.1. Introduction

This section describes the on-chip 10 bit analog-to-digital converter of the T89C51AC2. Eight ADC channels are available for sampling of the external sources AN0 to AN7. An analog multiplexer allows the single ADC converter to select one from the 8 ADC channels as ADC input voltage (ADCIN). ADCIN is converted by the 10 bit-cascaded potentiometric ADC.

Two kind of conversion are available:
- Standard conversion (8 bits).
- Precision conversion (10 bits).

For the precision conversion, set bit PSIDLE in ADCON register and start conversion. The chip is in a pseudo-idle mode, the CPU doesn't run but the peripherals are always running. This mode allows digital noise to be as low as possible, to ensure high precision conversion.

For this mode it is necessary to work with end of conversion interrupt, which is the only way to wake up the chip.

If another interrupt occurs during the precision conversion, it will be treated only after this conversion is ended.

16.2. Features

- 8 channels with multiplexed inputs
- 10-bit cascaded potentiometric ADC
- Conversion time 20 micro-seconds
- Zero Error (offset) +/- 2 LSB max
- Positive Reference Voltage Range 2.4 to 3.0Volt
- ADCIN Range 0 to 3Volt
- Integral non-linearity typical 1 LSB, max. 2 LSB
- Differential non-linearity typical 0.5 LSB, max. 1 LSB
- Conversion Complete Flag or Conversion Complete Interrupt
- Selected ADC Clock

16.3. ADC Port1 I/O Functions

Port 1 pins are general I/O that are shared with the ADC channels. The channel select bit in ADCF register define which ADC channel/port1 pin will be used as ADCIN. The remaining ADC channels/port1 pins can be used as general purpose I/O or as the alternate function that is available. Writes to the port register which aren't selected by the ADCF will not have any effect.

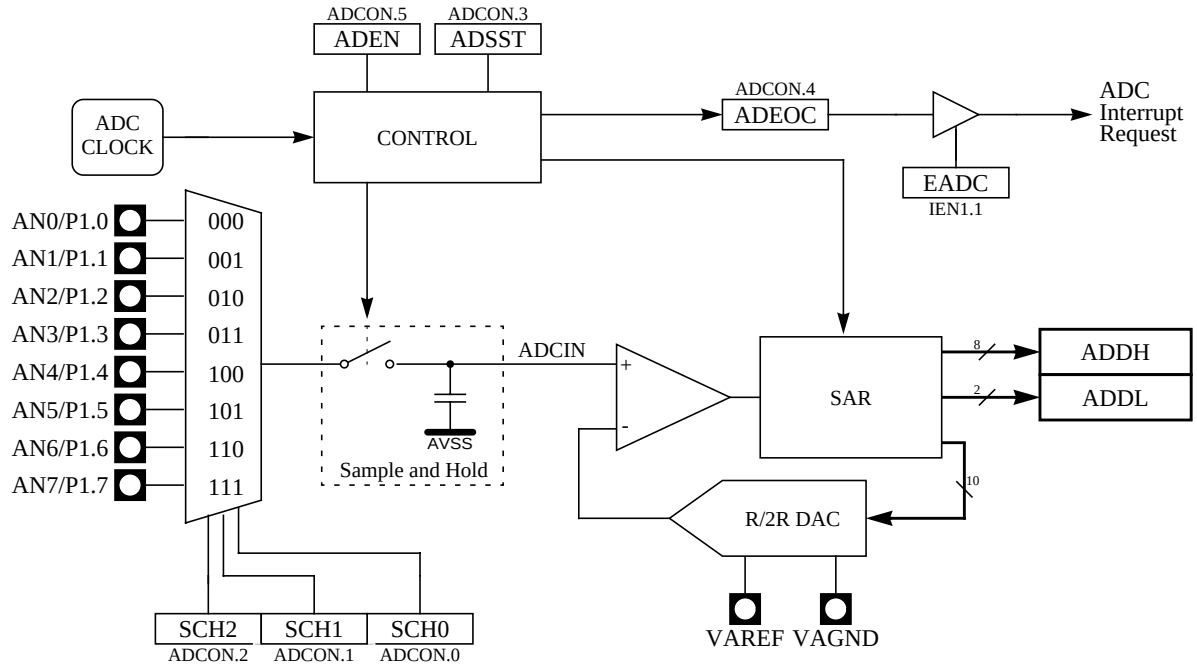

Figure 77. ADC Description

Figure 78 shows the timing diagram of a complete conversion. For simplicity, the figure depicts the waveforms in idealized form and do not provide precise timing information. For ADC characteristics and timing parameters refer to the Section “AC Characteristics” of the T89C51AC2 datasheet.

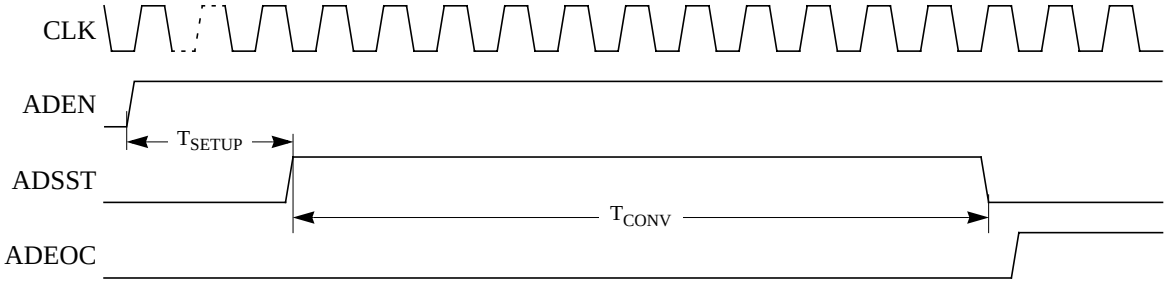

Figure 78. Timing Diagram

NOTE:
Tsetup = 4 us
Tconv=11 clock ADC

16.4. ADC Converter Operation

A start of single A/D conversion is triggered by setting bit ADSST (ADCON.3).

The busy flag ADSST(ADCON.3) is automatically set when an A/D conversion is running. After completion of the A/D conversion, it is cleared by hardware. This flag can be read only, a write has no effect.

The end-of-conversion flag ADEOC (ADCON.4) is set when the value of conversion is available in ADDH and ADDL, it is cleared by software. If the bit EADC (IEN1.1) is set, an interrupt occur when flag ADEOC is set (see Figure 80). Clear this flag for re-arming the interrupt.

The bits SCH0 to SCH2 in ADCON register are used for the analog input channel selection.

Before Starting Power reduction modes the ADC conversion has to be completed.

Table 21. Selected Analog input

SCH2	SCH1	SCH0	Selected Analog input
0	0	0	AN0
0	0	1	AN1
0	1	0	AN2
0	1	1	AN3
1	0	0	AN4
1	0	1	AN5
1	1	0	AN6
1	1	1	AN7

16.5. Voltage Conversion

When the ADCIN is equals to VAREF the ADC converts the signal to 3FFh (full scale). If the input voltage equals VAGND, the ADC converts it to 000h. Input voltage between VAREF and VAGND are a straight-line linear conversion. All other voltages will result in 3FFh if greater than VAREF and 000h if less than VAGND.

Note that ADCIN should not exceed VAREF absolute maximum range!

16.6. Clock Selection

The maximum clock frequency for ADC is 700KHz. A prescaler is featured (ADCCLK) to generate the ADC clock from the oscillator frequency.

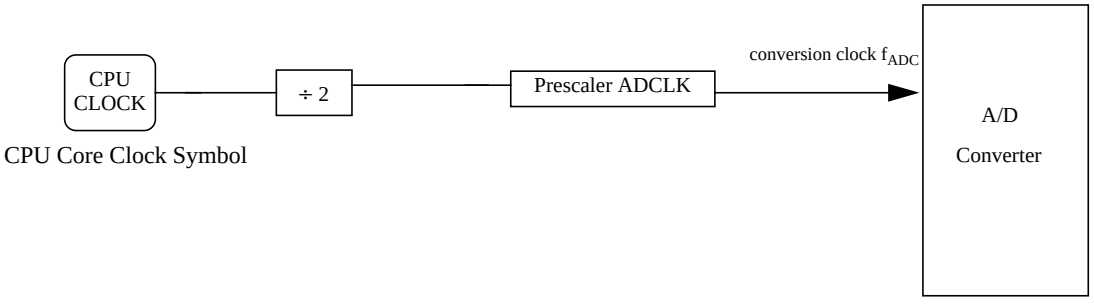

Figure 79. A/D Converter clock

16.7. ADC Standby Mode

When the ADC is not used, it is possible to set it in standby mode by clearing bit ADEN in ADCON register. In this mode the power dissipation is about 1uW.

16.8. IT ADC management

An interrupt end-of-conversion will occurs when the bit ADEOC is actived and the bit EADC is set. For re-arming the interrupt the bit ADEOC must be cleared by software.

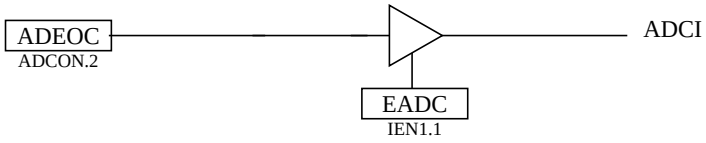

Figure 80. ADC interrupt structure

Preview - Confidential

16.9. Registers

ADCF (S:F6h)
ADC Configuration

7	6	5	4	3	2	1	0
CH 7	CH 6	CH 5	CH 4	CH 3	CH 2	CH 1	CH 0

Bit Number	Bit Mnemonic	Description
7-0	CH 0:7	**Channel Configuration** Set to use P1.x as ADC input. Clear tu use P1.x as standart I/O port.

Reset Value=0000 0000b

Figure 81. ADCF Register

ADCON (S:F3h)
ADC Control Register

7	6	5	4	3	2	1	0
-	PSIDLE	ADEN	ADEOC	ADSST	SCH2	SCH1	SCH0

Bit Number	Bit Mnemonic	Description
7	-	
6	PSIDLE	**Pseudo Idle mode (best precision)** Set to put in idle mode during conversion Clear to converte without idle mode.
5	ADEN	**Enable/$\overline{\text{Standby}}$ Mode** Set to enable ADC Clear for Standby mode (power dissipation 1 uW).
4	ADEOC	**End Of Conversion** Set by hardware when ADC result is ready to be read. This flag can generate an interrupt. Must be cleared by software.
3	ADSST	**Start and Status** Set to start an A/D conversion. Cleared by hardware after completion of the conversion
2-0	SCH2:0	**Selection of channel to convert** see Table 21

Reset Value=X000 0000b

Figure 82. ADCON Register

ADCLK (S:F2h)
ADC Clock Prescaler

7	6	5	4	3	2	1	0
-	-	-	PRS 4	PRS 3	PRS 2	PRS 1	PRS 0

Bit Number	Bit Mnemonic	Description
7-5	-	**Reserved** The value read from these bits are indeterminate. Do not set these bits.
4-0	PRS4:0	**Clock Prescaler** f_{ADC} = fosc / (4 (or 2 in X2 mode)* PRS)

Reset Value: XXX0 0000b

Figure 83. ADCLK Register

ADDH (S:F5h Read Only)
ADC Data High byte register

7	6	5	4	3	2	1	0
ADAT 9	ADAT 8	ADAT 7	ADAT 6	ADAT 5	ADAT 4	ADAT 3	ADAT 2

Bit Number	Bit Mnemonic	Description
7-0	ADAT9:2	**ADC result** bits 9-2

Reset Value: 00h

Figure 84. ADDH Register

ADDL (S:F4h Read Only)
ADC Data Low byte register

7	6	5	4	3	2	1	0
-	-	-	-	-	-	ADAT 1	ADAT 0

Bit Number	Bit Mnemonic	Description
7-2	-	**Reserved** The value read from these bits are indeterminate. Do not set these bits.
1-0	ADAT1:0	**ADC result** bits 1-0

Reset Value: 00h

Figure 85. ADDL Register

17. Interrupt System

17.1. Introduction

The CAN Controller has a total of 8 interrupt vectors: two external interrupts ($\overline{INT0}$ and $\overline{INT1}$), three timer interrupts (timers 0, 1 and 2), a serial port interrupt, a PCA and an ADC. These interrupts are shown below.

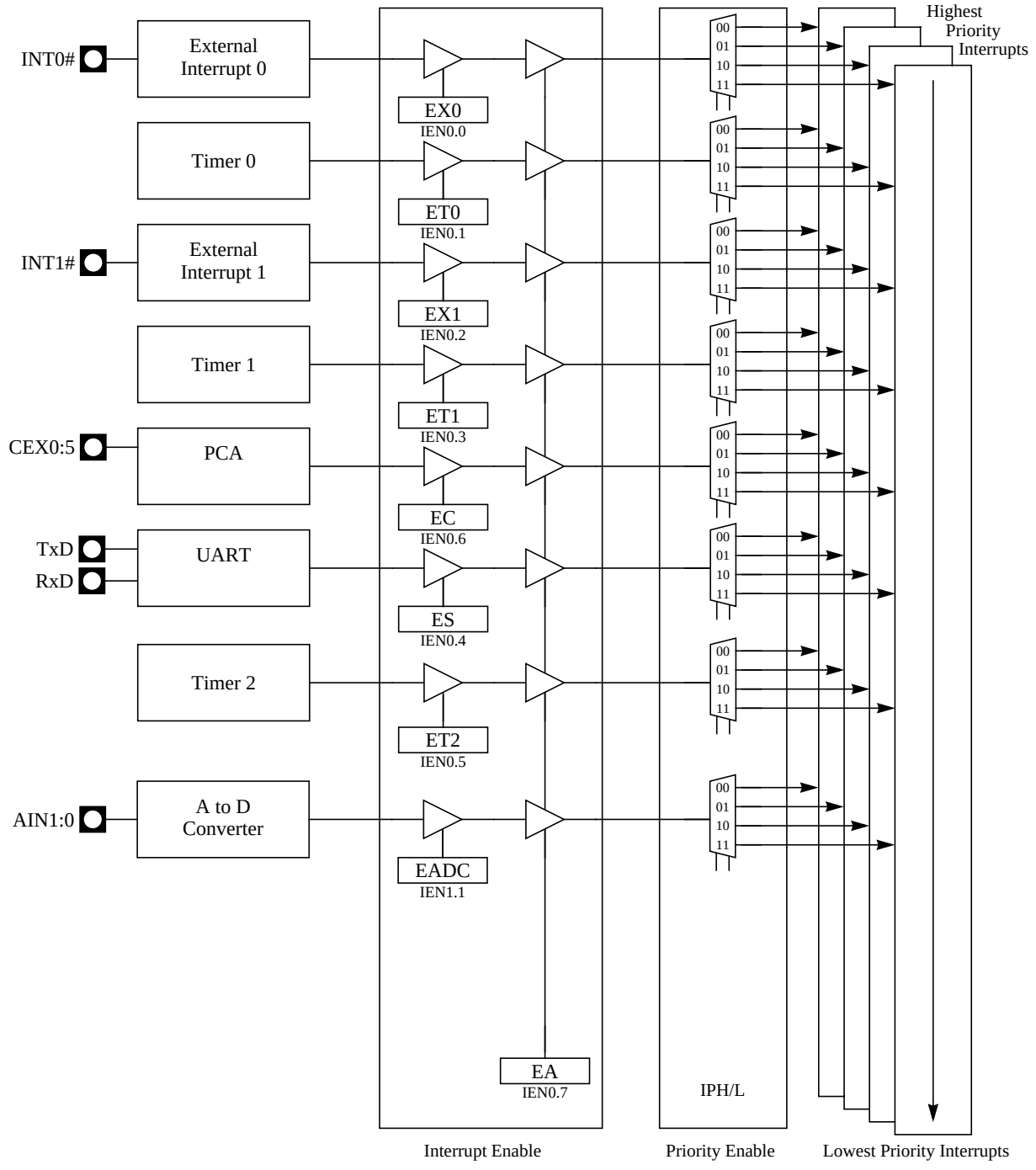

Figure 86. Interrupt Control System

Each of the interrupt sources can be individually enabled or disabled by setting or clearing a bit in the Interrupt Enable register. This register also contains a global disable bit which must be cleared to disable all the interrupts at the same time.

Each interrupt source can also be individually programmed to one of four priority levels by setting or clearing a bit in the Interrupt Priority registers. The Table below shows the bit values and priority levels associated with each combination.

Table 22. Priority Level Bit Values

IPH.x	IPL.x	Interrupt Level Priority
0	0	0 (Lowest)
0	1	1
1	0	2
1	1	3 (Highest)

A low-priority interrupt can be interrupted by a high priority interrupt but not by another low-priority interrupt. A high-priority interrupt cannot be interrupted by any other interrupt source.

If two interrupt requests of different priority levels are received simultaneously, the request of the higher priority level is serviced. If interrupt requests of the same priority level are received simultaneously, an internal polling sequence determines which request is serviced. Thus within each priority level there is a second priority structure determined by the polling sequence, see Table 23.

Table 23. Interrupt priority Within level

Interrupt Name	Interrupt Address Vector	Priority Number
external interrupt (INT0)	0003h	1
Timer0 (TF0)	000Bh	2
external interrupt (INT1)	0013h	3
Timer1 (TF1)	001Bh	4
PCA (CF or CCFn)	0033h	5
UART (RI or TI)	0023h	6
Timer2 (TF2)	002Bh	7
-	-	-
ADC (ADCI)	0043h	8

17.2. Registers

IEN0 (S:A8h)
Interrupt Enable Register

7	6	5	4	3	2	1	0
EA	EC	ET2	ES	ET1	EX1	ET0	EX0

Bit Number	Bit Mnemonic	Description
7	EA	**Enable All interrupt bit** Clear to disable all interrupts. Set to enable all interrupts. If EA=1, each interrupt source is individually enabled or disabled by setting or clearing its interrupt enable bit.
6	EC	**PCA Interrupt Enable** Clear to disable the PCA interrupt. Set to enable the PCA interrupt.
5	ET2	**Timer 2 overflow interrupt Enable bit** Clear to disable timer 2 overflow interrupt. Set to enable timer 2 overflow interrupt.
4	ES	**Serial port Enable bit** Clear to disable serial port interrupt. Set to enable serial port interrupt.
3	ET1	**Timer 1 overflow interrupt Enable bit** Clear to disable timer 1 overflow interrupt. Set to enable timer 1 overflow interrupt.
2	EX1	**External interrupt 1 Enable bit** Clear to disable external interrupt 1. Set to enable external interrupt 1.
1	ET0	**Timer 0 overflow interrupt Enable bit** Clear to disable timer 0 overflow interrupt. Set to enable timer 0 overflow interrupt.
0	EX0	**External interrupt 0 Enable bit** Clear to disable external interrupt 0. Set to enable external interrupt 0.

Reset Value: 0000 0000b
bit addressable

Figure 87. IEN0 Register

IEN1 (S:E8h)
Interrupt Enable Register

7	6	5	4	3	2	1	0
-	-	-	-		-	**EADC**	-

Bit Number	Bit Mnemonic	Description
7	-	**Reserved** The value read from this bit is indeterminate. Do not set this bit.
6	-	**Reserved** The value read from this bit is indeterminate. Do not set this bit.
5	-	**Reserved** The value read from this bit is indeterminate. Do not set this bit.
4	-	**Reserved** The value read from this bit is indeterminate. Do not set this bit.
3	-	**Reserved** The value read from this bit is indeterminate. Do not set this bit.
2	-	**Reserved** The value read from this bit is indeterminate. Do not set this bit.
1	EADC	**ADC Interrupt Enable bit** Clear to disable the ADC interrupt. Set to enable the ADC interrupt.
0	-	**Reserved** The value read from this bit is indeterminate. Do not set this bit.

Reset Value: xxxx xx0xb
bit addressable

Figure 88. IEN1 Register

IPL0 (S:B8h)
Interrupt Enable Register

7	6	5	4	3	2	1	0
-	PPC	PT2	PS	PT1	PX1	PT0	PX0

Bit Number	Bit Mnemonic	Description
7	-	**Reserved** The value read from this bit is indeterminate. Do not set this bit.
6	PPC	**EWC Counter Interrupt Priority bit** Refer to PPCH for priority level
5	PT2	**Timer 2 overflow interrupt Priority bit** Refer to PT2H for priority level.
4	PS	**Serial port Priority bit** Refer to PSH for priority level.
3	PT1	**Timer 1 overflow interrupt Priority bit** Refer to PT1H for priority level.
2	PX1	**External interrupt 1 Priority bit** Refer to PX1H for priority level.
1	PT0	**Timer 0 overflow interrupt Priority bit** Refer to PT0H for priority level.
0	PX0	**External interrupt 0 Priority bit** Refer to PX0H for priority level.

Reset Value: x000 0000b
bit addressable

Figure 89. IPL0 Register

IPL1 (S:F8h)
Interrupt Priority Low Register 1

7	6	5	4	3	2	1	0
-	-	-	-	-	-	PADCL	-

Bit Number	Bit Mnemonic	Description
7	-	**Reserved** The value read from this bit is indeterminate. Do not set this bit.
6	-	**Reserved** The value read from this bit is indeterminate. Do not set this bit.
5	-	**Reserved** The value read from this bit is indeterminate. Do not set this bit.
4	-	**Reserved** The value read from this bit is indeterminate. Do not set this bit.
3	-	**Reserved** The value read from this bit is indeterminate. Do not set this bit.
2	-	**Reserved** The value read from this bit is indeterminate. Do not set this bit.
1	PADCL	**ADC Interrupt Priority level less significant bit.** Refer to PSPIH for priority level.
0	-	**Reserved** The value read from this bit is indeterminate. Do not set this bit.

Reset Value: xxxx xx0xb
bit addressable

Figure 90. IPL1 Register

IPH0 (B7h)
Interrupt High Priority Register

7	6	5	4	3	2	1	0
-	PPCH	PT2H	PSH	PT1H	PX1H	PT0H	PX0H

Bit Number	Bit Mnemonic	Description
7	-	**Reserved** The value read from this bit is indeterminate. Do not set this bit.
6	PPCH	**EWC-PCA Counter Interrupt Priority level most significant bit** PPCH PPC Priority level 0 0 Lowest 0 1 1 0 1 1 Highest priority
5	PT2H	Timer 2 overflow interrupt High Priority bit PT2H PT2 Priority Level 0 0 Lowest 0 1 1 0 1 1 Highest
4	PSH	Serial port High Priority bit PSH PS Priority Level 0 0 Lowest 0 1 1 0 1 1 Highest
3	PT1H	Timer 1 overflow interrupt High Priority bit PT1H PT1 Priority Level 0 0 Lowest 0 1 1 0 1 1 Highest
2	PX1H	External interrupt 1 High Priority bit PX1H PX1 Priority Level 0 0 Lowest 0 1 1 0 1 1 Highest
1	PT0H	Timer 0 overflow interrupt High Priority bit PT0H PT0 Priority Level 0 0 Lowest 0 1 1 0 1 1 Highest
0	PX0H	External interrupt 0 high priority bit PX0H PX0 Priority Level 0 0 Lowest 0 1 1 0 1 1 Highest

Reset Value: X000 0000b

Figure 91. IPL0 Register

IPH1 (S:FFh)
Interrupt high priority Register 1

7	6	5	4	3	2	1	0
-	-	-	-	-	-	PADCH	-

Bit Number	Bit Mnemonic	Description
7	-	**Reserved** The value read from this bit is indeterminate. Do not set this bit.
6	-	**Reserved** The value read from this bit is indeterminate. Do not set this bit.
5	-	**Reserved** The value read from this bit is indeterminate. Do not set this bit.
4	-	**Reserved** The value read from this bit is indeterminate. Do not set this bit.
3	-	**Reserved** The value read from this bit is indeterminate. Do not set this bit.
2	-	**Reserved** The value read from this bit is indeterminate. Do not set this bit.
1	PADCH	**ADC Interrupt Priority level most significant bit** PADCH PADCL Priority level 0 0 Lowest 0 1 1 0 1 1 Highest
0	-	**Reserved** The value read from this bit is indeterminate. Do not set this bit.

Reset Value = xxxx xx0xb

Figure 92. IPH1 Register

18. Electrical Characteristics

18.1. Absolute Maximum Ratings (1)

Ambiant Temperature Under Bias:
I = industrial -40°C to 85°C
Storage Temperature -65°C to + 150°C
Voltage on V_{CC} to V_{SS}-0.5 V to + 6V
Voltage on Any Pin to V_{SS}-0.5 V to V_{CC} + 0.2 V
Power Dissipation 1 W(2)

NOTES

1. *Stresses at or above those listed under " Absolute Maximum Ratings" may cause permanent damage to the device. This is a stress rating only and functional operation of the device at these or any other conditions above those indicated in the operational sections of this specification is not implied. Exposure to absolute maximum rating conditions may affect device reliability.*
2. *This value is based on the maximum allowable die temperature and the thermal resistance of the package.*

18.2. DC Parameters for Standard Voltage

T_A = -40°C to +85°C; V_{SS} = 0 V; V_{CC} = 5 V ± 10%; F = 0 to 40 MHz.

Symbol	Parameter	Min	Typ	Max	Unit	Test Conditions
V_{IL}	Input Low Voltage	-0.5		0.7(7)	V	
V_{IH}	Input High Voltage except XTAL1, RST	0.2 V_{CC} + 0.9		V_{CC} + 0.5	V	
V_{IH1}	Input High Voltage, XTAL1, RST	0.7 V_{CC}		V_{CC} + 0.5	V	
V_{OL}	Output Low Voltage, ports 1, 2, 3 and 4(6)			0.3 0.45 1.0	V V V	I_{OL} = 100 µA(4) I_{OL} = 1.6 mA(4) I_{OL} = 3.5 mA(4)
V_{OL1}	Output Low Voltage, port 0, ALE, $\overline{PSEN}$ (6)			0.3 0.45 1.0	V V V	I_{OL} = 200 µA(4) I_{OL} = 3.2 mA(4) I_{OL} = 7.0 mA(4)
V_{OH}	Output High Voltage, ports 1, 2, 3, 4 and 5	V_{CC} - 0.3 V_{CC} - 0.7 V_{CC} - 1.5			V V V	I_{OH} = -10 µA I_{OH} = -30 µA I_{OH} = -60 µA V_{CC} = 5 V ± 10%
V_{OH1}	Output High Voltage, port 0, ALE, $\overline{PSEN}$	V_{CC} - 0.3 V_{CC} - 0.7 V_{CC} - 1.5			V V V	I_{OH} = -200 µA I_{OH} = -3.2 mA I_{OH} = -7.0 mA V_{CC} = 5 V ± 10%
R_{RST}	RST Pulldown Resistor	20	40 (5)	200	kΩ	
I_{IL}	Logical 0 Input Current ports 1, 2, 3 and 4			-50	µA	Vin = 0.45 V
I_{LI}	Input Leakage Current			±10	µA	0.45 V < Vin < V_{CC}
I_{TL}	Logical 1 to 0 Transition Current, ports 1, 2, 3 and 4			-650	µA	Vin = 2.0 V
C_{IO}	Capacitance of I/O Buffer			10	pF	Fc = 1 MHz T_A = 25°C
I_{PD}	Power Down Current		120	350	µA	4.5 V < V_{CC} < 5.5 V(3)
I_{CC}	Power Supply Current (Typical) I_{CCOP} = 0.5 Freq (MHz) + 3 mA I_{CCIDLE} = 0.3 Freq (MHz) + 2 mA					

Table 24. DC Parameters in Standard Voltage

NOTES

1. Operating I_{CC} is measured with all output pins disconnected; XTAL1 driven with T_{CLCH}, T_{CHCL} = 5 ns (see Figure 96.), V_{IL} = V_{SS} + 0.5 V, V_{IH} = V_{CC} - 0.5V; XTAL2 N.C.; $\overline{EA}$ = RST = Port 0 = V_{CC}. I_{CC} would be slightly higher if a crystal oscillator used (see Figure 93.).

2. Idle I_{CC} is measured with all output pins disconnected; XTAL1 driven with T_{CLCH}, T_{CHCL} = 5 ns, V_{IL} = V_{SS} + 0.5 V, V_{IH} = V_{CC} - 0.5 V; XTAL2 N.C; Port 0 = V_{CC}; $\overline{EA}$ = RST = V_{SS} (see Figure 94.).

3. Power Down I_{CC} is measured with all output pins disconnected; $\overline{EA}$ = V_{SS}, PORT 0 = V_{CC}; XTAL2 NC.; RST = V_{SS} (see Figure 95.). In addition, the WDT must be inactive and the POF flag must be set.

4. Capacitance loading on Ports 0 and 2 may cause spurious noise pulses to be superimposed on the V_{OL}s of ALE and Ports 1 and 3. The noise is due to external bus capacitance discharging into the Port 0 and Port 2 pins when these pins make 1 to 0 transitions during bus operation. In the worst cases (capacitive loading 100pF), the noise pulse on the ALE line may exceed 0.45V with maxi V_{OL} peak 0.6V. A Schmitt Trigger use is not necessary.

5. Typicals are based on a limited number of samples and are not guaranteed. The values listed are at room temperature..

6. Under steady state (non-transient) conditions, I_{OL} must be externally limited as follows:

Maximum I_{OL} per port pin: 10 mA

Maximum I_{OL} per 8-bit port:

Port 0: 26 mA

Ports 1, 2 and 3: 15 mA

Maximum total I_{OL} for all output pins: 71 mA

If I_{OL} exceeds the test condition, V_{OL} may exceed the related specification. Pins are not guaranteed to sink current greater than the listed test conditions.

7. Lower than standart C51 product independant from Vcc supply.

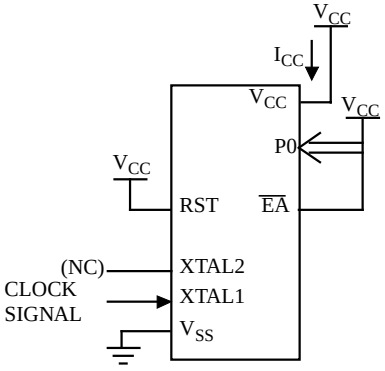

All other pins are disconnected.

Figure 93. I_{CC} Test Condition, Active Mode

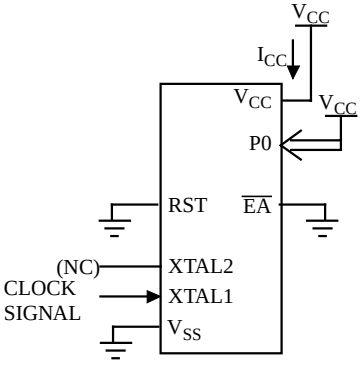

All other pins are disconnected.

Figure 94. I_{CC} Test Condition, Idle Mode

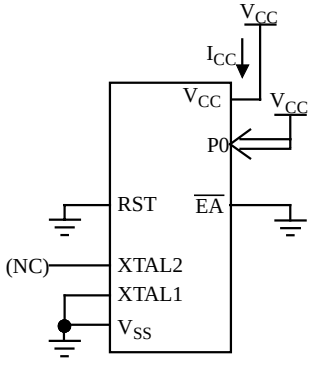

All other pins are disconnected.

Figure 95. I_{CC} Test Condition, Power-Down Mode

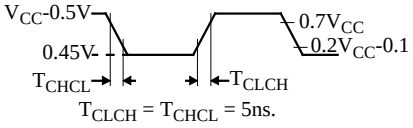

Figure 96. Clock Signal Waveform for I_{CC} Tests in Active and Idle Modes

18.3. DC Parameters for A/D Converter

Table 25. DC Parameters for AD Converter

Symbol	Parameter	Min	Typ	Max	Unit	Test Conditions
AVin	Analog input voltage	Vss- 0.2		Vref + 0.2	V	
Rref	Resistance between Vref and Vss	12	18	24	KOhm	
Vref	Reference voltage	2.40		3.00	V	
Cai	Analog input Capacitance		60		pF	During sampling
INL	Integral non linearity		1	2	lsb	
DNL	Differential non linearity		0.5	1	lsb	
OE	Offset error	-2		2	lsb	

18.4. AC Parameters

18.4.1. Explanation of the AC Symbols

Each timing symbol has 5 characters. The first character is always a “T” (stands for time). The other characters, depending on their positions, stand for the name of a signal or the logical status of that signal. The following is a list of all the characters and what they stand for.

Example:T_{AVLL} = Time for Address Valid to ALE Low.
T_{LLPL} = Time for ALE Low to $\overline{PSEN}$ Low.

T_A = -40°C to +85°C; V_{SS} = 0 V; V_{CC} = 5 V ±10% ; F = 0 to 40 MHz.

T_A = -40°C to +85°C; V_{SS} = 0 V; V_{CC} = 5 V ± 10%.

(Load Capacitance for port 0, ALE and PSEN = 60 pF; Load Capacitance for all other outputs = 60 pF.)

Table 26, Table 29 and Table 32 give the description of each AC symbols.

Table 27, Table 30 and Table 33 give for each range the AC parameter.

Table 28, Table 31 and Table 34 give the frequency derating formula of the AC parameter for each speed range description. To calculate each AC symbols. take the x value and use this value in the formula.

Example: T_{LLIV} and 20 MHz, Standard clock.
x = 30 ns
T = 50 ns
T_{CCIV} = 4T - x = 170 ns

18.4.2. External Program Memory Characteristics

Table 26. Symbol Description

Symbol	Parameter
T	Oscillator clock period
T_{LHLL}	ALE pulse width
T_{AVLL}	Address Valid to ALE
T_{LLAX}	Address Hold After ALE
T_{LLIV}	ALE to Valid Instruction In
T_{LLPL}	ALE to $\overline{PSEN}$
T_{PLPH}	$\overline{PSEN}$ Pulse Width
T_{PLIV}	$\overline{PSEN}$ to Valid Instruction In
T_{PXIX}	Input Instruction Hold After $\overline{PSEN}$
T_{PXIZ}	Input Instruction FloatAfter $\overline{PSEN}$
T_{AVIV}	Address to Valid Instruction In
T_{PLAZ}	$\overline{PSEN}$ Low to Address Float

Table 27. AC Parameters for a Fix Clock (F= 40 MHz)

Symbol	Min	Max	Units
T	25		ns
T_{LHLL}	40		ns
T_{AVLL}	10		ns
T_{LLAX}	10		ns
T_{LLIV}		70	ns
T_{LLPL}	15		ns
T_{PLPH}	55		ns
T_{PLIV}		35	ns
T_{PXIX}	0		ns
T_{PXIZ}		18	ns
T_{AVIV}		85	ns
T_{PLAZ}		10	ns

Table 28. AC Parameters for a Variable Clock

Symbol	Type	Standard Clock	X2 Clock	X parameter	Units
T_{LHLL}	Min	2 T - x	T - x	10	ns
T_{AVLL}	Min	T - x	0.5 T - x	15	ns
T_{LLAX}	Min	T - x	0.5 T - x	15	ns
T_{LLIV}	Max	4 T - x	2 T - x	30	ns
T_{LLPL}	Min	T - x	0.5 T - x	10	ns
T_{PLPH}	Min	3 T - x	1.5 T - x	20	ns
T_{PLIV}	Max	3 T - x	1.5 T - x	40	ns
T_{PXIX}	Min	x	x	0	ns
T_{PXIZ}	Max	T - x	0.5 T - x	7	ns
T_{AVIV}	Max	5 T - x	2.5 T - x	40	ns
T_{PLAZ}	Max	x	x	10	ns

18.4.3. External Program Memory Read Cycle

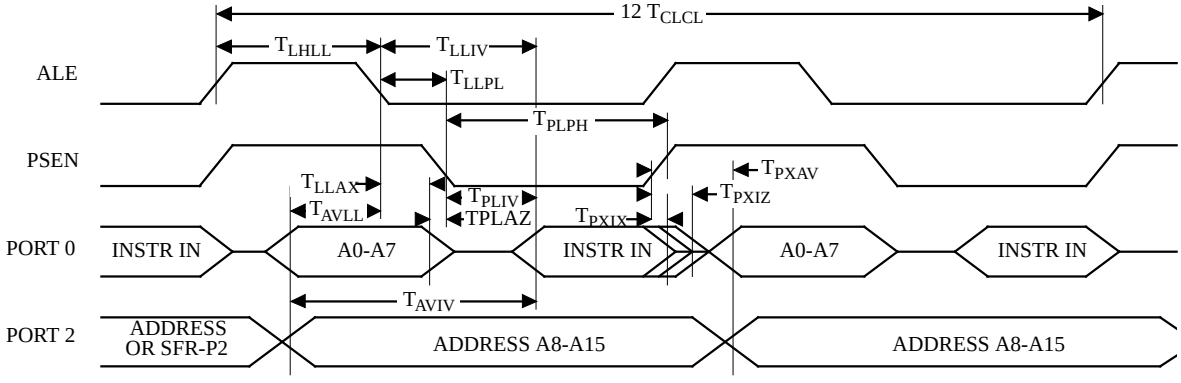

18.4.4. External Data Memory Characteristics

Table 29. Symbol Description

Symbol	Parameter
T_{RLRH}	$\overline{RD}$ Pulse Width
T_{WLWH}	$\overline{WR}$ Pulse Width
T_{RLDV}	$\overline{RD}$ to Valid Data In
T_{RHDX}	Data Hold After $\overline{RD}$
T_{RHDZ}	Data Float After $\overline{RD}$
T_{LLDV}	ALE to Valid Data In
T_{AVDV}	Address to Valid Data In
T_{LLWL}	ALE to $\overline{WR}$ or $\overline{RD}$
T_{AVWL}	Address to $\overline{WR}$ or $\overline{RD}$
T_{QVWX}	Data Valid to $\overline{WR}$ Transition
T_{QVWH}	Data set-up to $\overline{WR}$ High
T_{WHQX}	Data Hold After $\overline{WR}$
T_{RLAZ}	$\overline{RD}$ Low to Address Float
T_{WHLH}	$\overline{RD}$ or $\overline{WR}$ High to ALE high

Table 30. AC Parameters for a Fix Clock (F= 40 MHz)

Symbol	Min	Max	Units
T_{RLRH}	130		ns
T_{WLWH}	130		ns
T_{RLDV}		100	ns
T_{RHDX}	0		ns
T_{RHDZ}		30	ns
T_{LLDV}		160	ns
T_{AVDV}		165	ns
T_{LLWL}	50	100	ns
T_{AVWL}	75		ns
T_{QVWX}	10		ns
T_{QVWH}	160		ns
T_{WHQX}	15		ns
T_{RLAZ}		0	ns
T_{WHLH}	10	40	ns

Table 31. AC Parameters for a Variable Clock

Symbol	Type	Standard Clock	X2 Clock	X parameter	Units
T_{RLRH}	Min	6 T - x	3 T - x	20	ns
T_{WLWH}	Min	6 T - x	3 T - x	20	ns
T_{RLDV}	Max	5 T - x	2.5 T - x	25	ns
T_{RHDX}	Min	x	x	0	ns
T_{RHDZ}	Max	2 T - x	T - x	20	ns
T_{LLDV}	Max	8 T - x	4T -x	40	ns
T_{AVDV}	Max	9 T - x	4.5 T - x	60	ns
T_{LLWL}	Min	3 T - x	1.5 T - x	25	ns
T_{LLWL}	Max	3 T + x	1.5 T + x	25	ns
T_{AVWL}	Min	4 T - x	2 T - x	25	ns
T_{QVWX}	Min	T - x	0.5 T - x	15	ns
T_{QVWH}	Min	7 T - x	3.5 T - x	15	ns
T_{WHQX}	Min	T - x	0.5 T - x	10	ns
T_{RLAZ}	Max	x	x	0	ns
T_{WHLH}	Min	T - x	0.5 T - x	15	ns
T_{WHLH}	Max	T + x	0.5 T + x	15	ns

18.4.5. External Data Memory Write Cycle

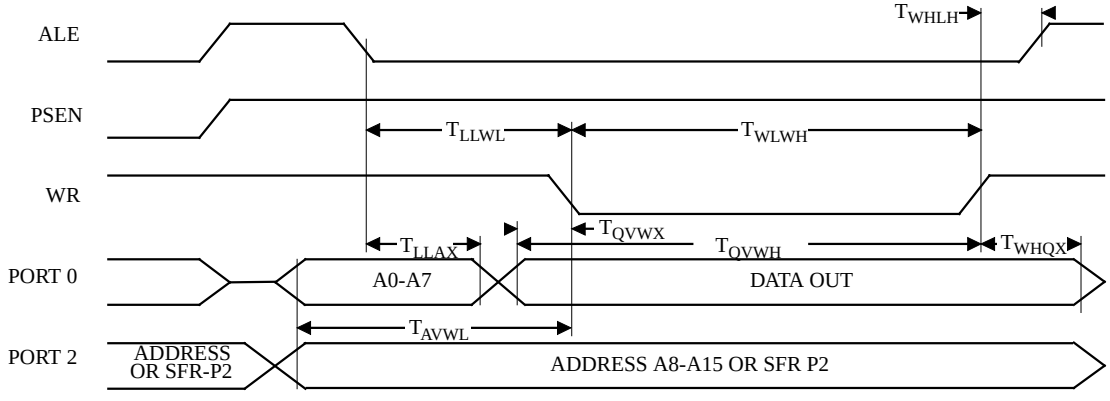

18.4.6. External Data Memory Read Cycle

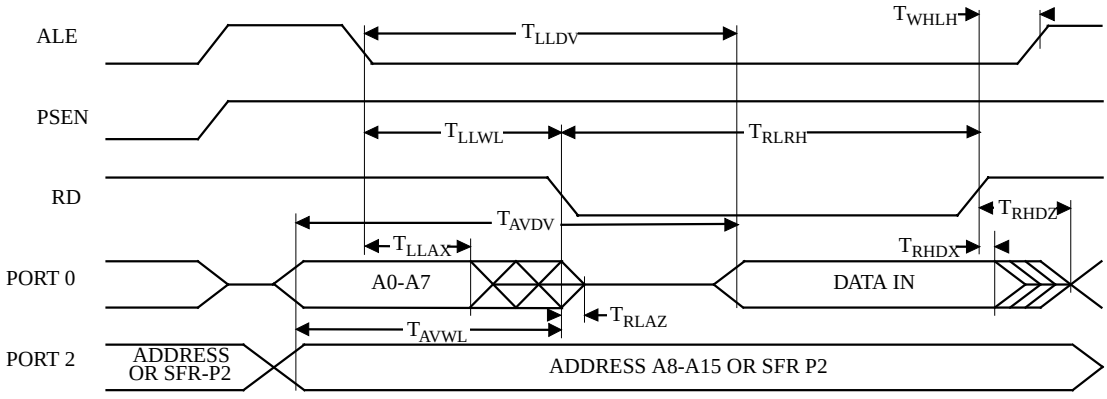

18.4.7. Serial Port Timing - Shift Register Mode

Table 32. Symbol Description (F= 40 MHz)

Symbol	Parameter
T_{XLXL}	Serial port clock cycle time
T_{QVHX}	Output data set-up to clock rising edge
T_{XHQX}	Output data hold after clock rising edge
T_{XHDX}	Input data hold after clock rising edge
T_{XHDV}	Clock rising edge to input data valid

Table 33. AC Parameters for a Fix Clock (F= 40 MHz)

Symbol	Min	Max	Units
T_{XLXL}	300		ns
T_{QVHX}	200		ns
T_{XHQX}	30		ns
T_{XHDX}	0		ns
T_{XHDV}		117	ns

Table 34. AC Parameters for a Variable Clock

Symbol	Type	Standard Clock	X2 Clock	X parameter for -M range	Units
T_{XLXL}	Min	12 T	6 T		ns
T_{QVHX}	Min	10 T - x	5 T - x	50	ns
T_{XHQX}	Min	2 T - x	T - x	20	ns
T_{XHDX}	Min	x	x	0	ns
T_{XHDV}	Max	10 T - x	5 T- x	133	ns

18.4.8. Shift Register Timing Waveforms

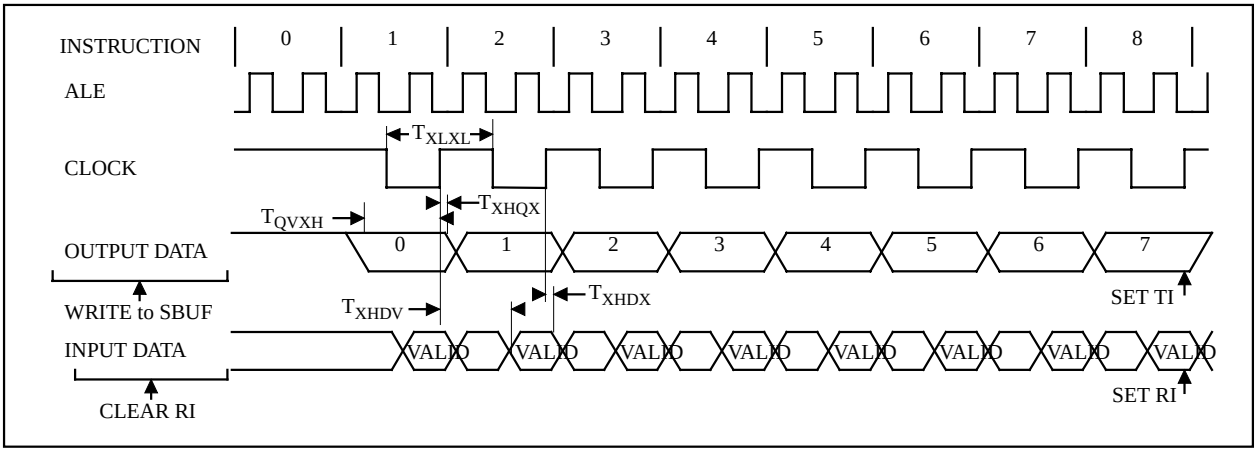

18.4.9. External Clock Drive Characteristics (XTAL1)

Symbol	Parameter	Min	Max	Units
T_{CLCL}	Oscillator Period	25		ns
T_{CHCX}	High Time	5		ns
T_{CLCX}	Low Time	5		ns
T_{CLCH}	Rise Time		5	ns
T_{CHCL}	Fall Time		5	ns
T_{CHCX}/T_{CLCX}	Cyclic ratio in X2 mode	40	60	%

Table 35. AC Parameters

18.4.10. External Clock Drive Waveforms

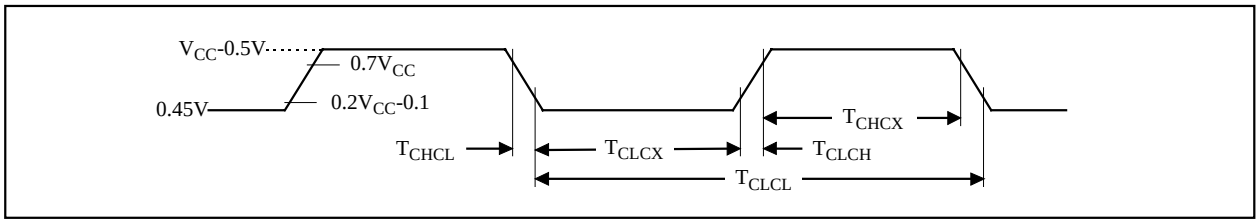

18.4.11. AC Testing Input/Output Waveforms

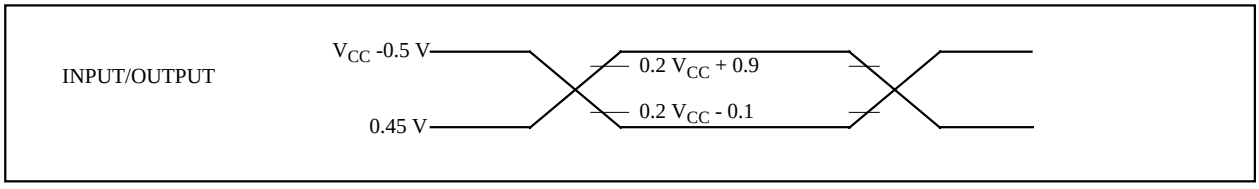

AC inputs during testing are driven at V_{CC} - 0.5 for a logic “1” and 0.45V for a logic “0”. Timing measurement are made at V_{IH} min for a logic “1” and V_{IL} max for a logic “0”.

18.4.12. Float Waveforms

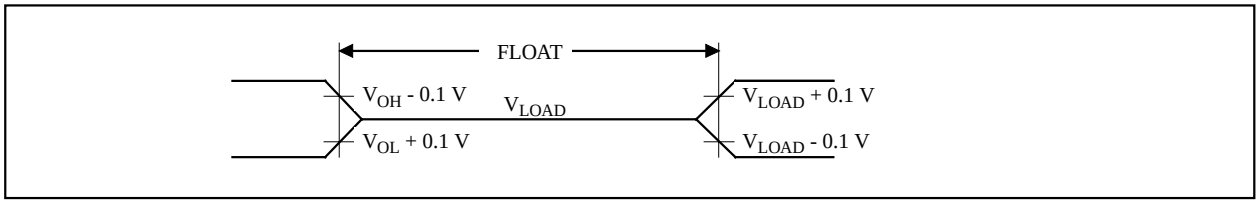

For timing purposes as port pin is no longer floating when a 100 mV change from load voltage occurs and begins to float when a 100 mV change from the loaded V_{OH}/V_{OL} level occurs. $I_{OL}/I_{OH} \geq \pm$ 20mA.

18.4.13. Clock Waveforms

Valid in normal clock mode. In X2 mode XTAL2 must be changed to XTAL2/2.

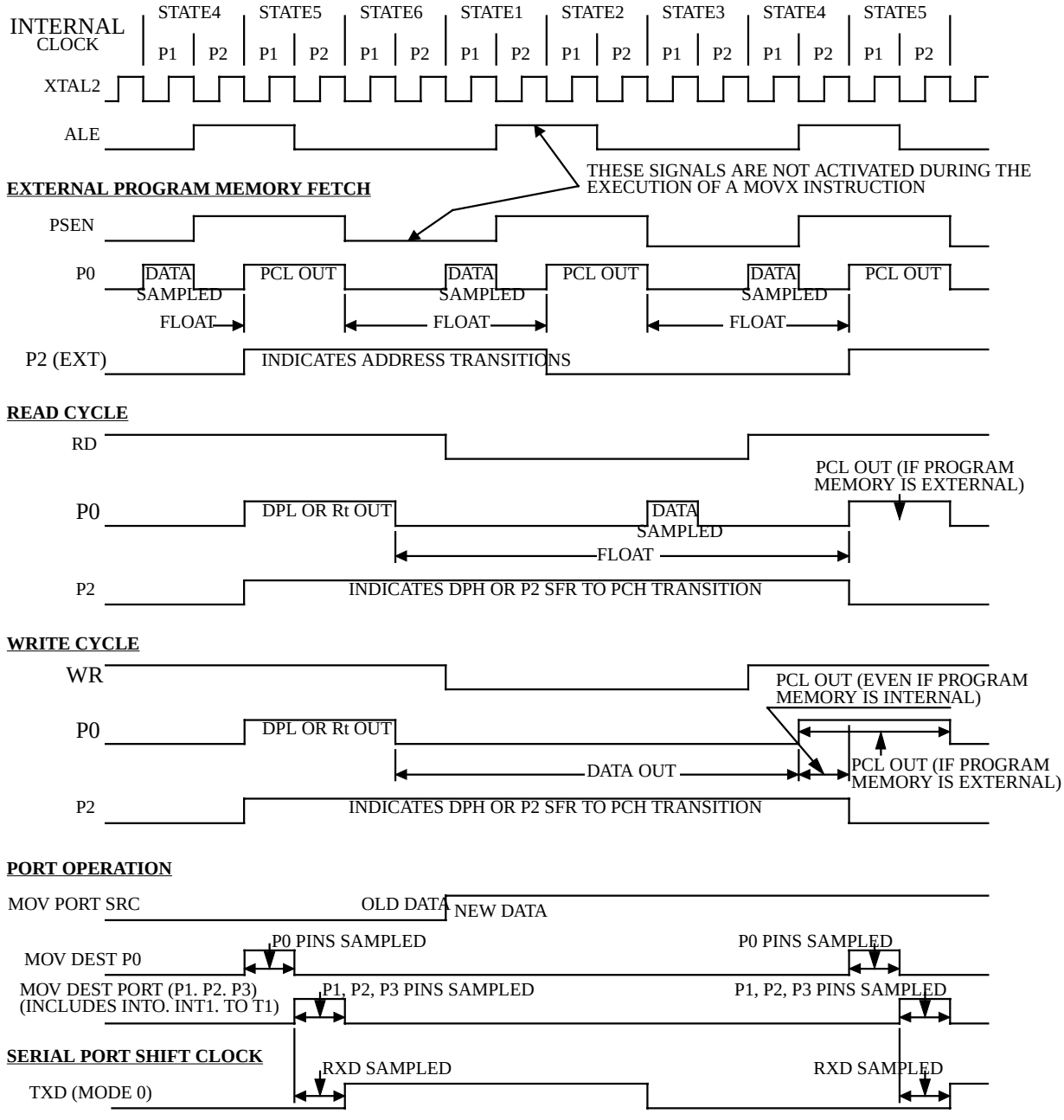

This diagram indicates when signals are clocked internally. The time it takes the signals to propagate to the pins, however, ranges from 25 to 125 ns. This propagation delay is dependent on variables such as temperature and pin loading. Propagation also varies from output to output and component. Typically though (T_A=25°C fully loaded) $\overline{RD}$ and $\overline{WR}$ propagation delays are approximately 50ns. The other signals are typically 85 ns. Propagation delays are incorporated in the AC specifications.

19. Ordering Information

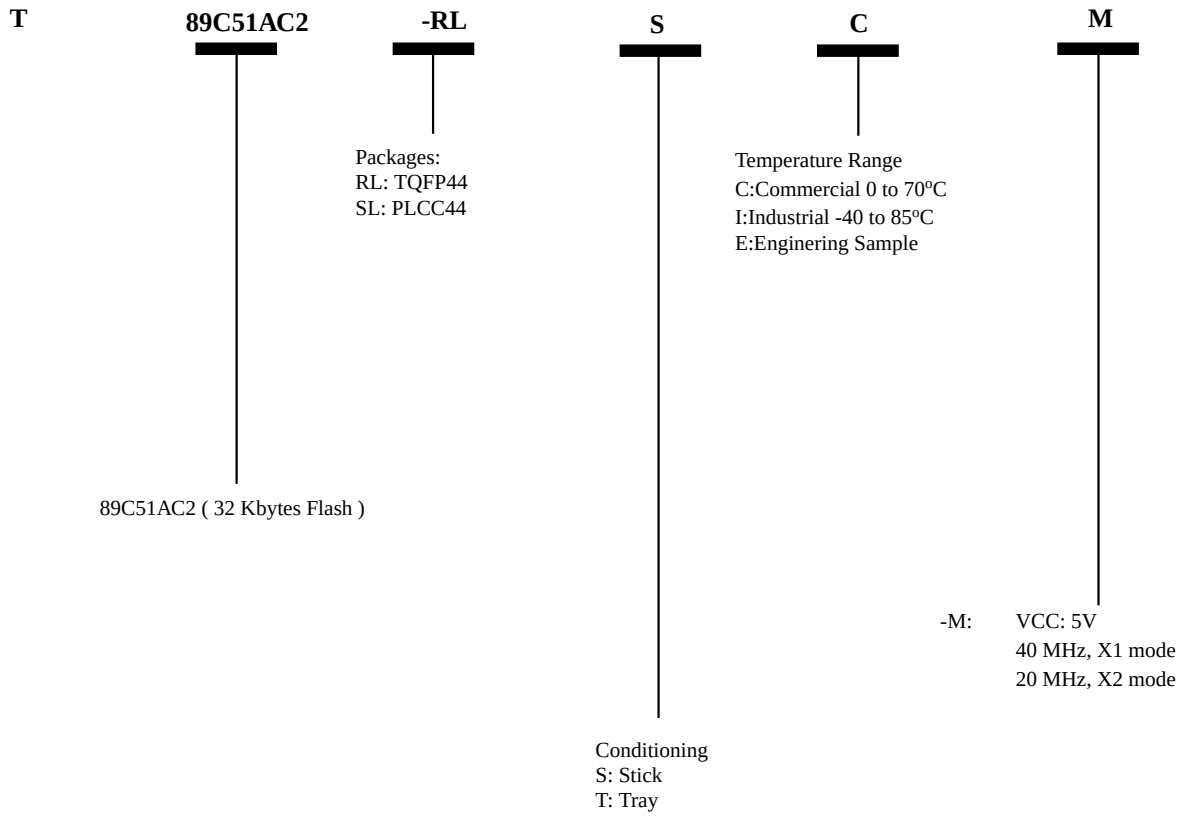

Preview - Confidential

Table 36. Possible order entries

Extension	Type
-SLSCM	Stick, PLCC44, Com
-SLSIM	Stick, PLCC44, Ind
-RLTCM	Tray, TQFP44, Com
-RLTIM	Tray, TQFP44, Ind
-SLSEM	Stick, PLCC44, Sample
-RLTEM	Tray, TQFP44, Sample