500mA Low Dropout Voltage Regulator

FEATURES

- **Wide Input Range: 2.5V to 5.5V**
- **Available Output Voltages:**
  1.5V / 1.8V / 2.0V / 2.5V / 2.8V / 3.0V / 3.3V / 3.7V
- **Low-Noise for RF Application**
- **Quick Start-Up (Typically 50us)**
- **Fast Response in Line/Load Transient**
- **Standby Current : <0.01uA**
- **TTL-Logic-Controlled Shutdown Input**
- **Low Temperature Coefficient**
- **Current Limiting Protection**
- **Thermal Shutdown Protection**
- **High Power Supply Rejection Ratio**
- **Only 1uF Output Capacitor Required for Stability**
- **Available Package (Lead-Free) :**
  SOT-23-3, SOT-23-5, SOT-223, SOT-89, SC-82

APPLICATIONS

- **CDMA/GSM Cellular Handsets**
- **Battery-Powered Equipment**
- **Laptop, Palmtops, Notebook Computers**
- **Hand-Held Instruments**
- **PCMCIA Cards**
- **Portable Information Appliances**

GENERAL DESCRIPTION

The T6328A is designed for portable RF and wireless applications with demanding performance and space requirements. The T6328A performance is optimized for battery-powered systems to deliver ultra low noise and low quiescent current. Regulator ground current increases only slightly in dropout, further prolonging the battery life. The T6328A also works with low-ESR ceramic capacitors, reducing the amount of board space necessary for power applications, critical in hand-held wireless devices. The T6328A consumes less than 0.01uA in shutdown mode and has fast turn-on time less than 50us. The other features include ultra low dropout voltage, high output accuracy, current limiting protection, and high ripple rejection ratio. Available in the SOT-23-3, SOT-23-5, SOT-223**,** SC-82 and SOT -89 packages.

PART NUMBER EXAMPLES

T6328A-18AXG

a b c d

a : Device Number
b : Output Voltage
15=1.5V, 18=1.8V, 20=2.0V, 25=2.5V
28=2.8V, 30=3.0V, 33=3.3V, 37=3.7V
c : Pin-out / function and Package
AX=SOT-23-5(A), BX=SOT-23-5(B),
CX=SOT-23-3(A),
DX=SOT-89(A), EX=SOT-89(B),
FX=SOT223(A),
AU=SC-82(A)
d : G=lead-free

PIN ARRANGEMENT (Top view)

SOT23-5(A)
T6328A-XXAXG

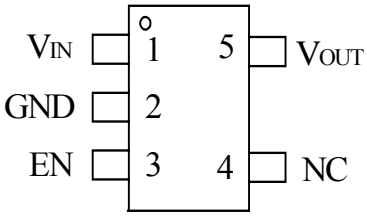

SOT23-5(B)
T6328A-XXBXG

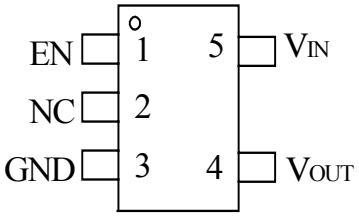

SOT23-3(A)
T6328A-XXCXG

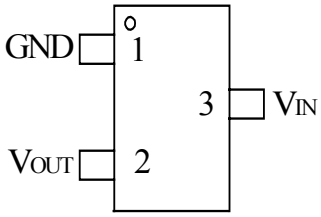

SOT-89(A)
T6328A-XXDXG

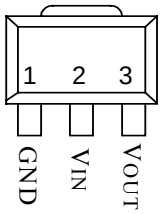

SOT-89(B)
T6328A-XXEXG

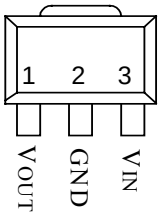

SOT-223(A)
T6328A-XXFXG

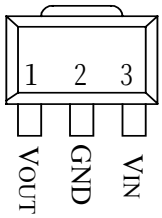

SC-82(A)
T6328A-XXAUG

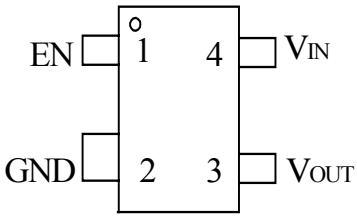

PIN DESCRIPTION

SYMBOL	DESCRIPTION
VOUT	Voltage output
GND	Ground pin
EN	Enable signal, high active
VIN	Input supply pin.
NC	No connect

Absolute Maximum Ratings

Supply Voltage ..... -0.3V to 6V
EN Pin Input Voltage ..... -0.3V to 6V
Operating Juction Temperature ..... -55°C to +150°C
Operating temperature range ..... -40°C to +125°C
Storage temperature range ..... -65°C to +150°C
Lead temperature (soldering, 10sec) ..... 260°C
Power Dissipation, PD @ TA = 25°C :
SOT-23-3/SOT-23-5.....400mW
SC-82 ..... 300mW
SOT-89 / SOT-223 .....500mW
Package Thermal Resistance :
SOT-23-3/SOT-23-5, θJA ....250°C/W
SC-82, θJA ....333°C/W
SOT-89 /SOT-223, θJA ..... 200°C/W
ESD Susceptibility
HBM (Human Body Mode) 2KV
MM (Machine Mode) ..... …200V

Electrical Characteristics

(V_{IN} = V_{OUT} + 1V, T_A = 25°C, C_{IN} = C_{OUT} = 1uF, unless otherwise noted)

Symbol	Description	Conditions		Min.	Typ.	Max	Unit
V_{IN}	Input Voltage			2.5	-	5.5	V
ΔV_{OUT}	Output Voltage Accuracy	I_{OUT}=1mA		-2	-	+2	%
I_{OUT}	Output current			-	500	-	mA
I_{LIM}	Current Limit	R_{Load} =1 ohm		-	600	-	mA
I_Q	Quiescent Current	EN≥ 1.2V, I_{OUT}=0mA		-	65	90	uA
ΔV_{LINE}	Line Regulation	V_{IN}= V_{OUT} +1V to 5.5V, I_{OUT} =1mA		-	3	10	mV
ΔV_{LOAD}	Load Regulation	0.1mA< I_{OUT} < 500mA		-	10	30	mV
V_{DROP}	Dropout Voltage	I_L=500mA	V_{OUT}=3.0~3.9V	-	650	850	mV
			V_{OUT}=2.5~2.9V	-	780	980	mV
			V_{OUT}=2.0~2.4V	-	1100	1300	mV
			V_{OUT}=1.4~1.9V	-	1400	1600	mV
I_{SHDN}	Shutdown current	EN = V_{IN}		-	0.01	1	uA
I_{IBEN}	EN Input Bias Current	EN = V_{IN} or GND		-	0	100	nA
V_{ENH}	EN Input High Voltage			1.2	-	-	V
V_{ENL}	EN Input Low Voltage			-	-	0.4	V
PSRR	Power Supply Rejection Rate	C_{OUT}=1uF, I_{OUT} =100mA	f =100Hz	-	-60	-	dB
			f =10KHz	-	-30	-	
T_{SD}	Thermal Shutdown Temperature			-	165	-	°C
ΔT_{SD}	Thermal Shutdown Temperature Hysteresis			-	30	-	°C

Applications Information

Like any voltage regulator, the external capacitors used for the T6328A must be carefully selected for regulator stability and performance. Using a capacitor whose value is > 1uF on the T6328A input and the amount of capacitance can be increased without limit. The input capacitor must be located a distance of not more than 0.5 inch from the input pin of the IC and returned to a clean analog ground. Any good quality ceramic or tantalum can be used for this capacitor. The capacitor with larger value and lower ESR (equivalent series resistance) provides better PSRR and line-transient response.

The output capacitor must meet both requirements for minimum amount of capacitance and ESR in all voltage regulator application. The T6328A is designed specifically to work with low ESR ceramic output capacitor in space-saving and performance consideration. Using a ceramic capacitor whose value is at least 1uF with ESR is more than 20mΩ on the T6328A output ensures stability. The T6328A still works well with output capacitor of other types due to the wide stable ESR range. Output capacitor of larger capacitance can reduce noise and improve load transient response, stability and PSRR.The output capacitor should be located with in 0.5 inch from the VOUT pin of the T6328A and returned to a clean analog ground.

Enable Function

The T6328A features an voltage regulator enable/disable function. To assure the T6328A voltage regulator will switch on, the EN turn on control level must be greater than 1.2V. The T6328A voltage regulator will go into shutdown mode when the voltage on the EN pin falls below 0.4V. The T6328A equips a quick-discharge function to protect the system. When the regulator is turned off by EN pin, the internal MOSFET between VOUT and GND will be turned on to discharge output voltage quickly. If the enable function is not needed in a specific application, it may be tied to GND/VIN to keep the voltage regulator in a continuously on state.

Thermal Considerations

Thermal protection limits power dissipation in T6328A. When the operating junction temperature exceeds 165°C, the OTP circuit starts the thermal shutdown function and turns the pass element off. The pass element turns on again after the junction temperature cools by 30°C. For continuous operation, do not exceed absolute maximum operatiog junction temperature 125°C. The power dissipation definition in device is shown as following formula :

$P_D = (V_{IN} - V_{OUT}) \times I_{OUT} + V_{IN} \times I_Q$

The maximum power dissipation depends on the thermal resistance of IC package, PCB layout, the rate of surroundings airflow and temperature difference between junction to ambient. The maximum power dissipation can be calculated by following formula :

$P_{D(MAX)} = (T_{J(MAX)} - TA) / \theta_{JA}$

Where $T_{J(MAX)}$ is the maximum operating junction temperature 125°C, T_A is the ambient temperature and the θ_{JA} is the junction to ambient thermal resistance. For recommended operating conditions specification of T6328A, where $T_{J(MAX)}$ is the maximum junction temperature of the die (125°C) and T_A is the maximum ambient temperature. The junction to ambient thermal resistance θ_{JA} is layout dependent) for SOT-23-3/SOT-23-5 package is 250°C/W, SC-82 package is 333°C/W, SOT-89/ SOT-223 package is 300°C/W on standard JEDEC 51-3 thermal test board. The maximum power dissipation at T_A = 25°C can be calculated by following formula :

$P_{D(MAX)}$ = (125°C - 25°C)/250 = 400mW (SOT-23-3/SOT-23-5)

$P_{D(MAX)}$ = (125°C - 25°C)/333 = 300mW (SC-82)

$P_{D(MAX)}$ = (125°C - 25°C)/200 = 500mW (SOT-89/ SOT-223)

The maximum power dissipation depends on operating ambient temperature for fixed $T_{J(MAX)}$ and thermal resistance θ_{JA} For T6328A packages.

PACKAGE DIMENSIONS
SOT-23-3

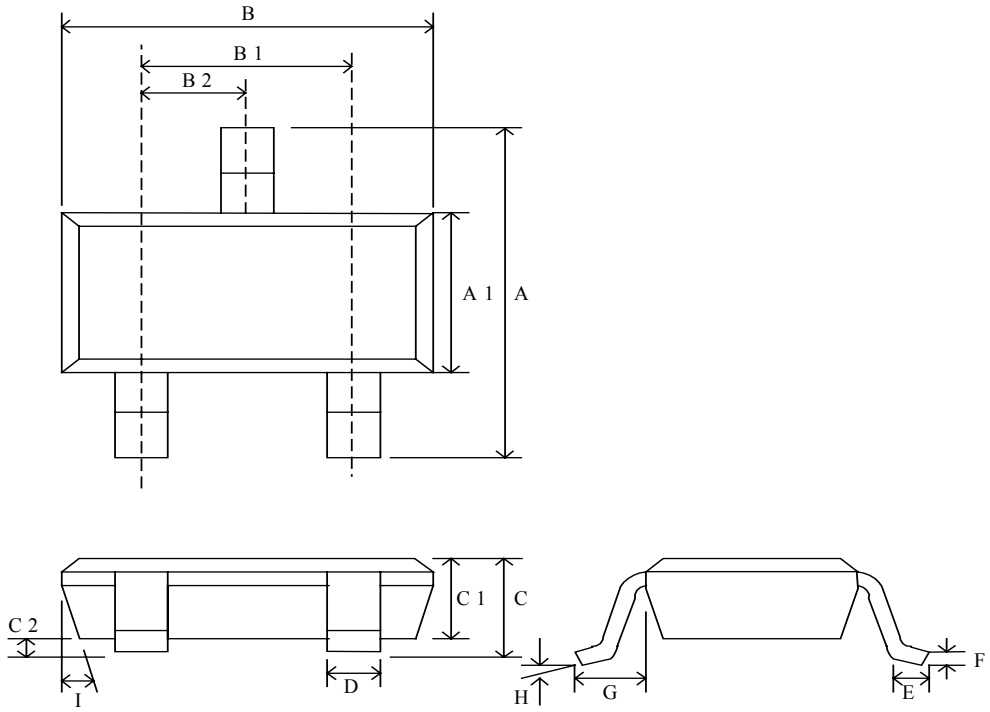

Symbol	Dimension in mm			Dimension in inch		
	Min.	Typ.	Max.	Min.	Typ.	Max.
A	2.60	2.80	3.00	0.102	0.110	0.118
A1	1.40	1.575	1.60	0.055	0.062	0.063
B	2.70	2.85	3.00	0.106	0.112	0.118
B1		1.90(BSC)			0.075(BSC)	
B2		0.95(BSC)			0.037(BSC)	
C	0.95	1.20	1.45	0.037	0.047	0.057
C1	0.90	1.10	1.30	0.035	0.043	0.051
C2	0	0.075	0.150	0	0.003	0.06
D		0.40			0.015	
E	0.30	0.45	0.60	0.012	0.018	0.023
F	0.08	0.15	0.22	0.003	0.006	0.009
G		0.60(REF)			0.023(REF)	
H	0~8°			0~8°		
I	5~15°			5~15°		

PACKAGE DIMENSIONS
SOT-23-5

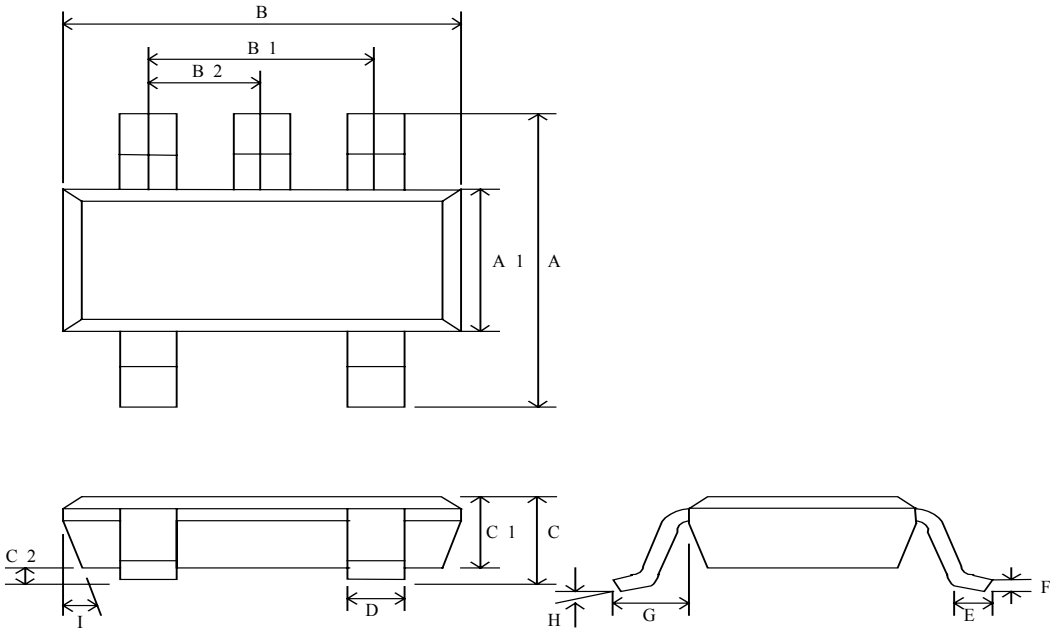

Symbol	Dimension in mm			Dimension in inch		
	Min.	Typ.	Max.	Min.	Typ.	Max.
A	2.60	2.80	3.00	0.102	0.110	0.118
A1	1.40	1.575	1.60	0.055	0.062	0.063
B	2.70	2.85	3.00	0.106	0.112	0.118
B1		1.90(BSC)			0.075(BSC)	
B2		0.95(BSC)			0.037(BSC)	
C	0.95	1.20	1.45	0.037	0.047	0.057
C1	0.90	1.10	1.30	0.035	0.043	0.051
C2	0	0.075	0.150	0	0.003	0.06
D		0.40			0.015	
E	0.30	0.45	0.60	0.012	0.018	0.023
F	0.08	0.15	0.22	0.003	0.006	0.009
G		0.60(REF)			0.023(REF)	
H	0~8°			0~8°		
I	5~15°			5~15°		

PACKAGE DIMENSIONS
SC-82

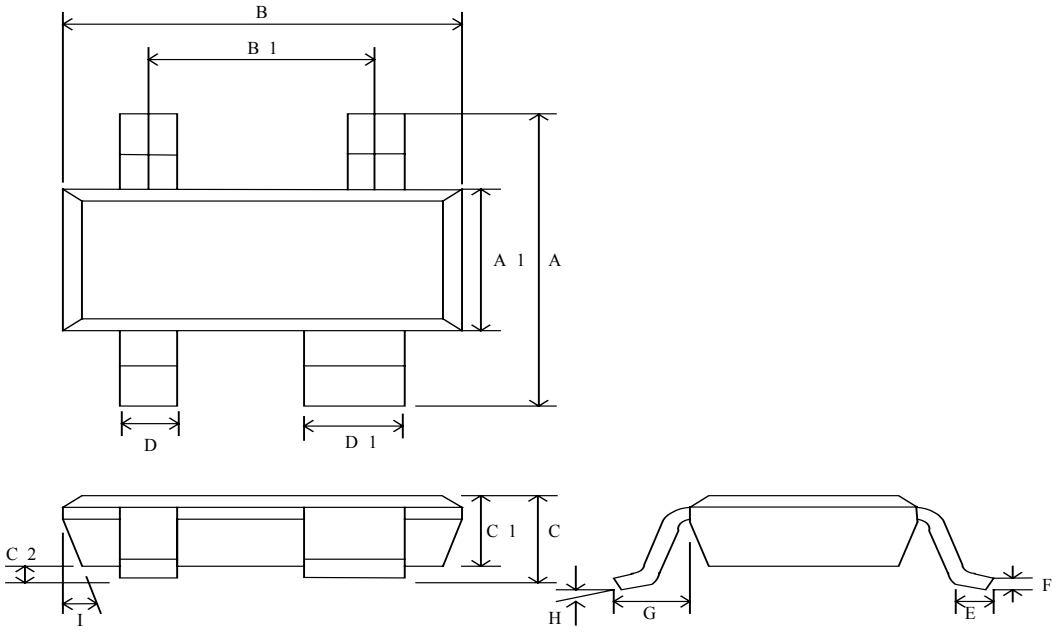

Symbol	Dimension in mm			Dimension in inch		
	Min.	Typ.	Max.	Min.	Typ.	Max.
A	1.80	-	2.45	0.071	-	0.096
A1	1.15	-	1.35	0.045	-	0.053
B	1.80	-	2.20	0.071	-	0.087
B1		1.30(BSC)			0.051(BSC)	
C	0.80	-	1.10	0.031	-	0.043
C1	0.80	-	1.00	0.031	-	0.039
C2	0.00	-	0.10	0.000	-	0.004
D	0.15	-	0.40	0.006	-	0.016
D1	0.35	-	0.50	0.014	-	0.020
E	0.20	-	0.46	0.008	-	0.018
F	0.08	-	0.26	0.003	-	0.010
G		0.65(REF)			0.025(REF)	
H	0~8°			0~8°		
I	5~15°			5~15°		

PACKAGE DIMENSIONS
SOT-89

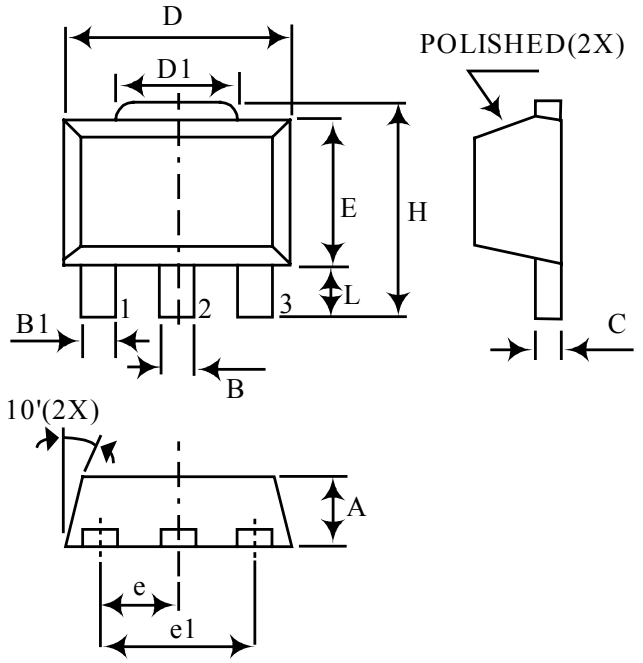

Symbol	Dimension in mm		Dimension in inch	
	Min.	Max.	Min.	Max.
A	1.40	1.60	0.055	0.063
B	0.44	0.56	0.017	0.022
B1	0.36	0.48	0.014	0.019
C	0.35	0.44	0.013	0.017
D	4.40	4.60	0.173	0.181
D1	1.35	1.83	0.053	0.072
E	2.29	2.60	0.090	0.102
H	3.94	4.25	0.155	0.167
e	1.50 BSC		0.059 BSC	
e1	3.00 BSC		0.118 BSC	
L	0.89	1.2	0.035	0.047

PACKAGE DIMENSIONS
SOT-223

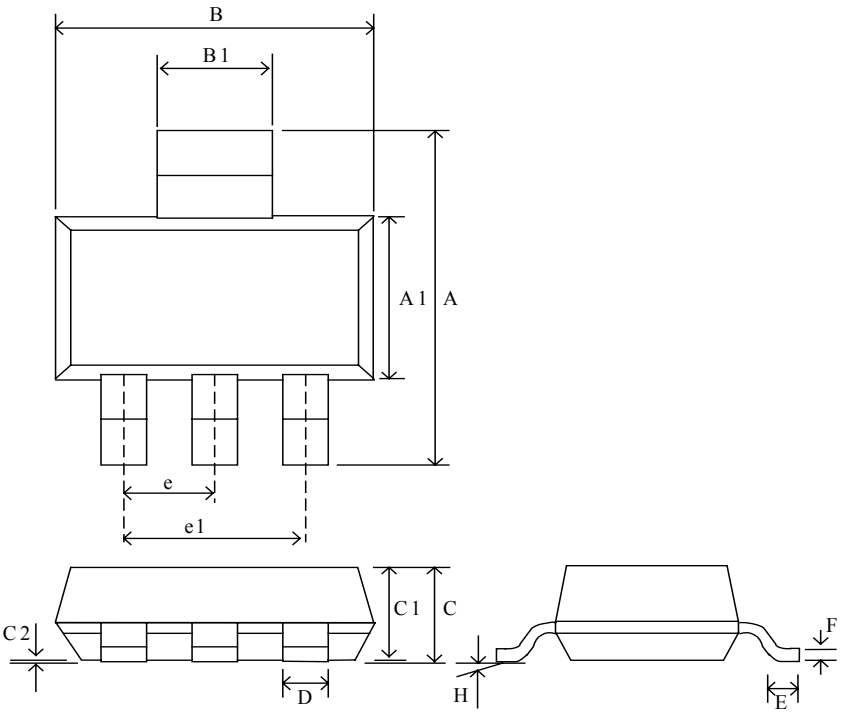

Symbol	Dimension in mm			Dimension in inch		
	Min.	Typ.	Max.	Min.	Typ.	Max.
A	6.70	7.00	7.30	0.263	0.275	0.287
A1	3.30	3.50	3.70	0.129	0.137	0.145
B	6.30	6.50	6.70	0.248	0.255	0.263
B1	2.90	3.00	3.10	0.114	0.118	0.122
C	-	-	1.80	-	-	0.70
C1	1.50	1.60	1.70	0.059	0.062	0.066
C2	0.02	-	0.10	0.001	-	0.003
D	0.66	0.70	0.84	0.025	0.027	0.033
E	0.75	-	-	0.029	-	-
e	-	2.30	-	-	0.090	-
e1	-	4.6	-	-	0.181	-
F	0.23	0.30	0.35	0.009	0.011	0.013
H	0~10°			0~10°		