SHEET OF

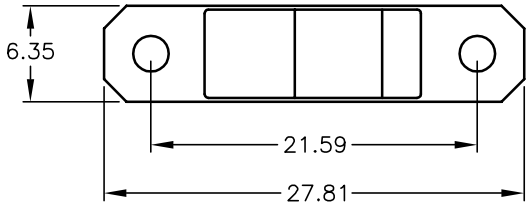

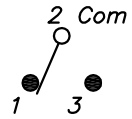

CIRCUIT: SPDT

▲

SWITCH FUNCTION		
POS. 1	POS. 2	POS. 3
		
(ON)	OFF	(ON)
2-3	OPEN	2-1

( )=Momentary

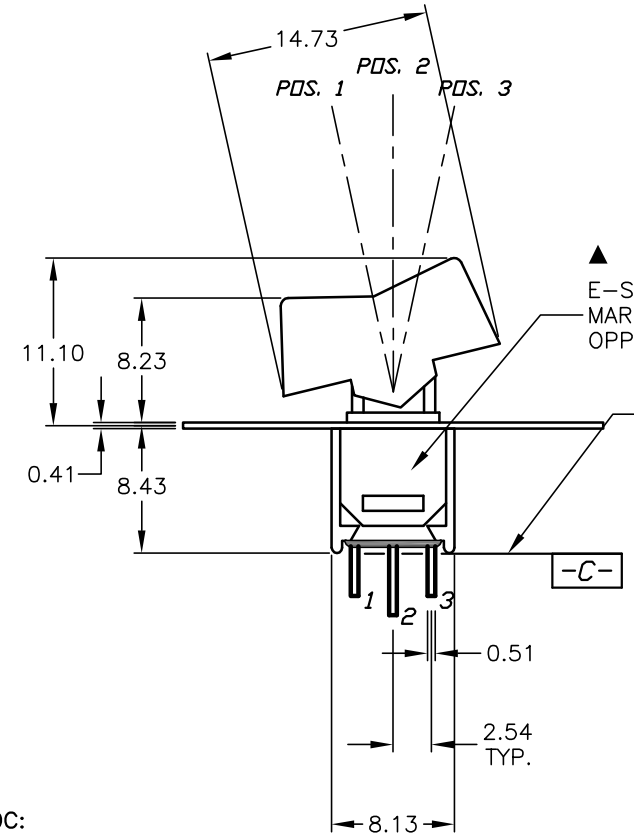

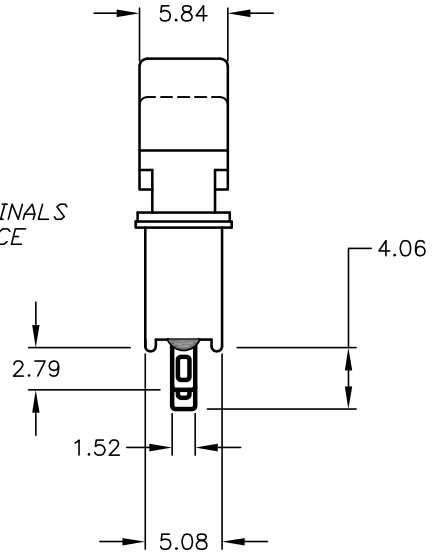

NOTES:

1. ALL DIMENSIONS IN MM [INCH]
2. GENERAL TOLERANCE: X.X=±0.4
   X.XX=±0.25
3. TERM. NOS. FOR REF. ONLY
4. CONTACT RATING: 3A@ 120VAC. OR 28VDC:
   1A@ 250VAC.
5. ▲ FIXED TERMINAL & MOVING CONTACT: Cu alloy w/ Silver plate
6. ELECTRIC LIFE: 30,000 make-and-break cycles
   at full load.
7. INSULATION RESISTANCE: 1,000 M ohm min.
8. DIELECTRIC STRENGTH: 1,000 V RMS @sea level.
9. OPERATING TEMP.: -30°C to +85°C
10. ▲ DENOTES CRITICAL PARAMETER.

REV.	ECN No.	DESCRIPTION	DATE	CHKD
A	13943	RELEASED FOR PRODUCTION	4/20/04	AR

THE INFORMATION CONTAINED IN THIS DOCUMENT
IS PROPRIETARY TO E-SWITCH AND IS
NOT TO BE COPIED OR TRANSFERRED

E-SWITCH®

TITLE: 400MSP4R6BLKM1QE

SCALE	DATE	DR	DWG	REV
2:1	4/20/04	AR	T414100	A