SHEET 1 OF 1

SWITCH FUNCTION		
POS. 1	POS. 2	POS. 3
		
(ON)	ON	(ON)
2-3, 5-6	2-3, 5-4	2-1, 5-4

(ON) = MOMENTARY

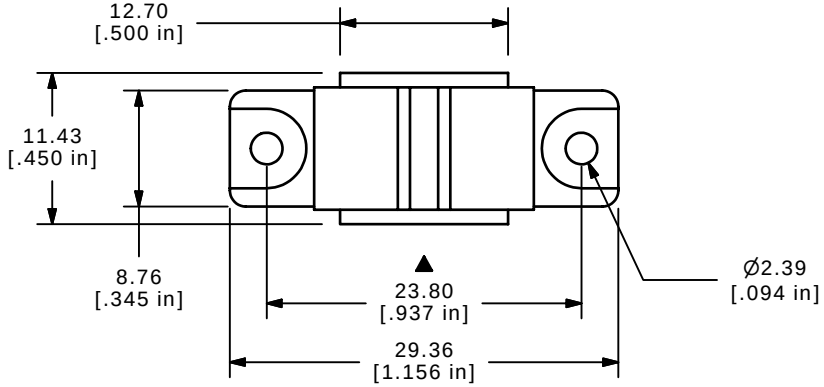

ISOMETRIC

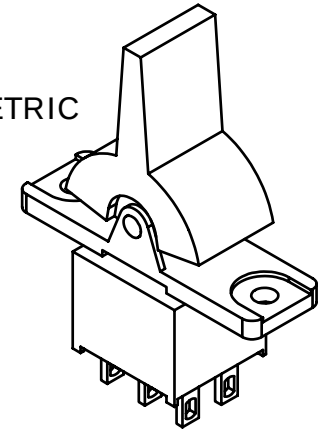

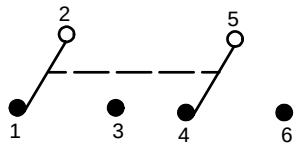

CIRCUIT: SPDT

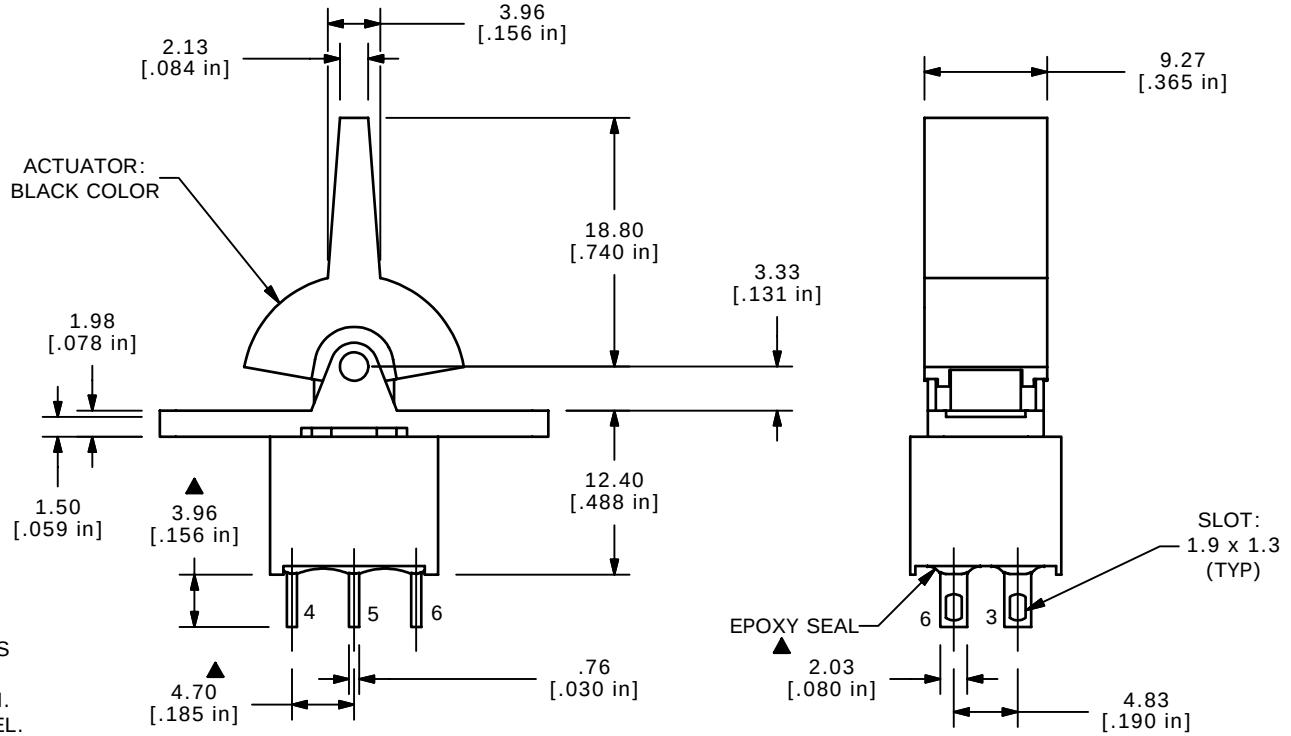

NOTE:
1. ALL DIMENSIONS IN MM [INCH]
2. GENERAL TOLERANCE: X.X=±0.4
   X.XX=±0.25
3. TERMINAL NUMBERS FOR REF ONLY
▲ 4. PLATING MATERIAL: SILVER
5. RATING: 5 AMPS @ 120VAC OR 28VDC UL, CUL
   2 AMPS @ 250VAC UL, CUL
6. ELECTRIC LIFE: 30,000 MAKE-AND-BREAK CYCLES
   AT FULL LOAD.
7. INSULATION RESISTANCE: 1,000 MEGA-OHM MIN.
8. DIELECTRIC STRENGTH: 1,000 V RMS @SEA LEVEL.
9. OPERATING TEMP.: -30°C to 85°C
10. ▲DENOTES CRITICAL PARAMETER.
11. 2002/95/EC (ROHS) COMPLAINT

REV	PCR NO	DESCRIPTION	DATE	BY
A	18483	RELEASE FOR PRODUCTION	4/14/09	BLR

THE INFORMATION CONTAINED IN THIS DOCUMENT IS PROPRIETARY TO E-SWITCH AND IS NOT TO BE COPIED OR TRANSFERRED

E•SWITCH® | LAMB™ INDUSTRIES

TITLE 300AWDP7R2BLKM1QE

SCALE	DATE	DR	DWG	REV
2:1	4/14/2009	BLR	T302020	A