SHEET 1 OF 1

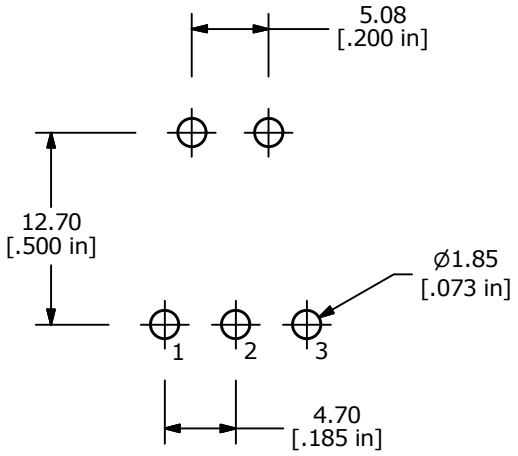

RECOMMENDED P.C. MOUNTING

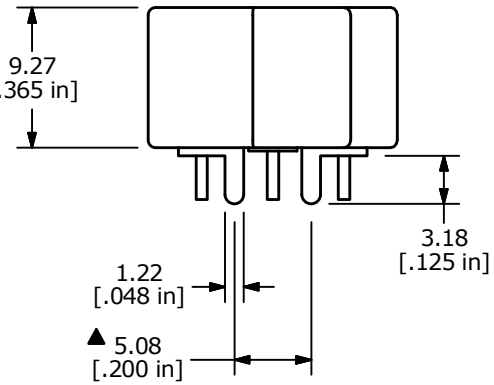

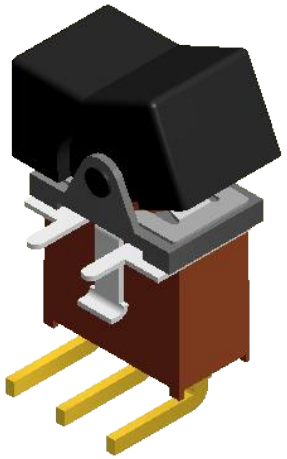

▲ SWITCH FUNCTION		
POS. 1	POS. 2	POS. 3
		
ON	OFF	ON
2-3	OPEN	2-1

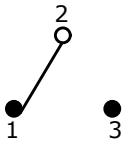

CIRCUIT: SPDT

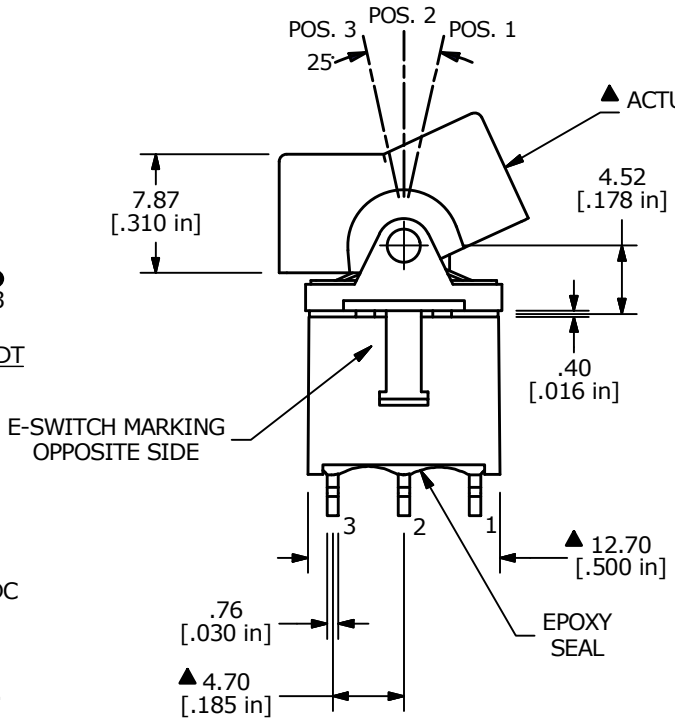

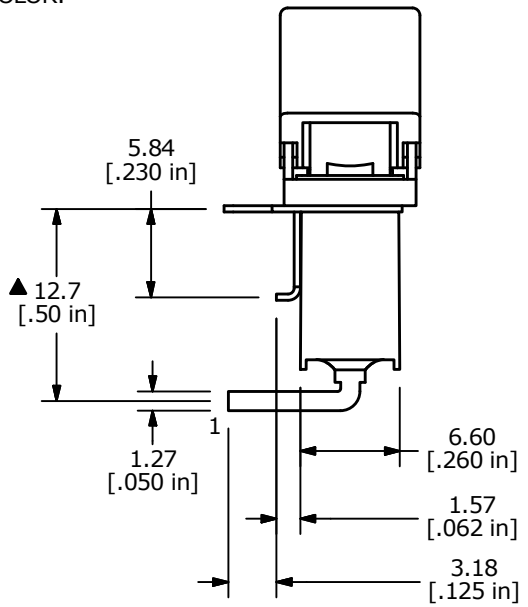

NOTE:
1. ALL DIMENSIONS IN MM [INCH]
2. GENERAL TOLERANCE: X.X=±0.4
   X.XX=±0.25
3. TERMINAL NUMBERS FOR REF ONLY
▲ 4. PLATING MATERIAL: GOLD
5. RATING: 0.4 VOLT-AMPS MAX. @20V MAX. AC OR DC
6. ELECTRIC LIFE: 30,000 MAKE-AND-BREAK CYCLES
   AT FULL LOAD.
7. INSULATION RESISTANCE: 1,000 MEGA-OHM MIN.
8. DIELECTRIC STRENGTH: 1,000 V RMS @SEA LEVEL.
9. OPERATING TEMP.: -30°C to 85°C
10. ▲ DENOTES CRITICAL PARAMETER.
11. 2011/65/EU (ROHS) COMPLIANT

REV	PCR NO	DESCRIPTION	DATE	BY
C	23153	UPDATED POSITION LABELING	1/3/18	MJR
B	22706	UPDATED LAYOUT AND TERMINALS	2/16/17	MJR

THE INFORMATION CONTAINED IN THIS DOCUMENT IS PROPRIETARY TO E-SWITCH AND IS NOT TO BE COPIED OR TRANSFERRED

E•SWITCH®

TITLE 300AWSP3J1BLKM6RE

SCALE	DATE	DR	DWG	REV
2:1	1/5/2016	MW	T301062	C