SHEET 1 OF 1

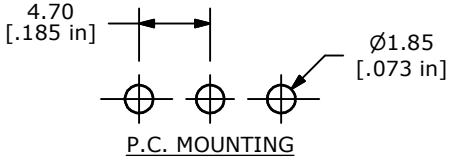

P.C. MOUNTING

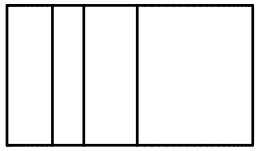

ISOMETRIC

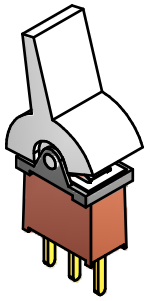

▲

SWITCH FUNCTION		
POS. 1	POS. 2	POS. 3
		
(ON)	OFF	(ON)
2-3	OPEN	2-1

(ON) = MOMENTARY

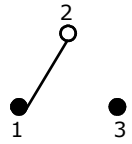

CIRCUIT: SPDT

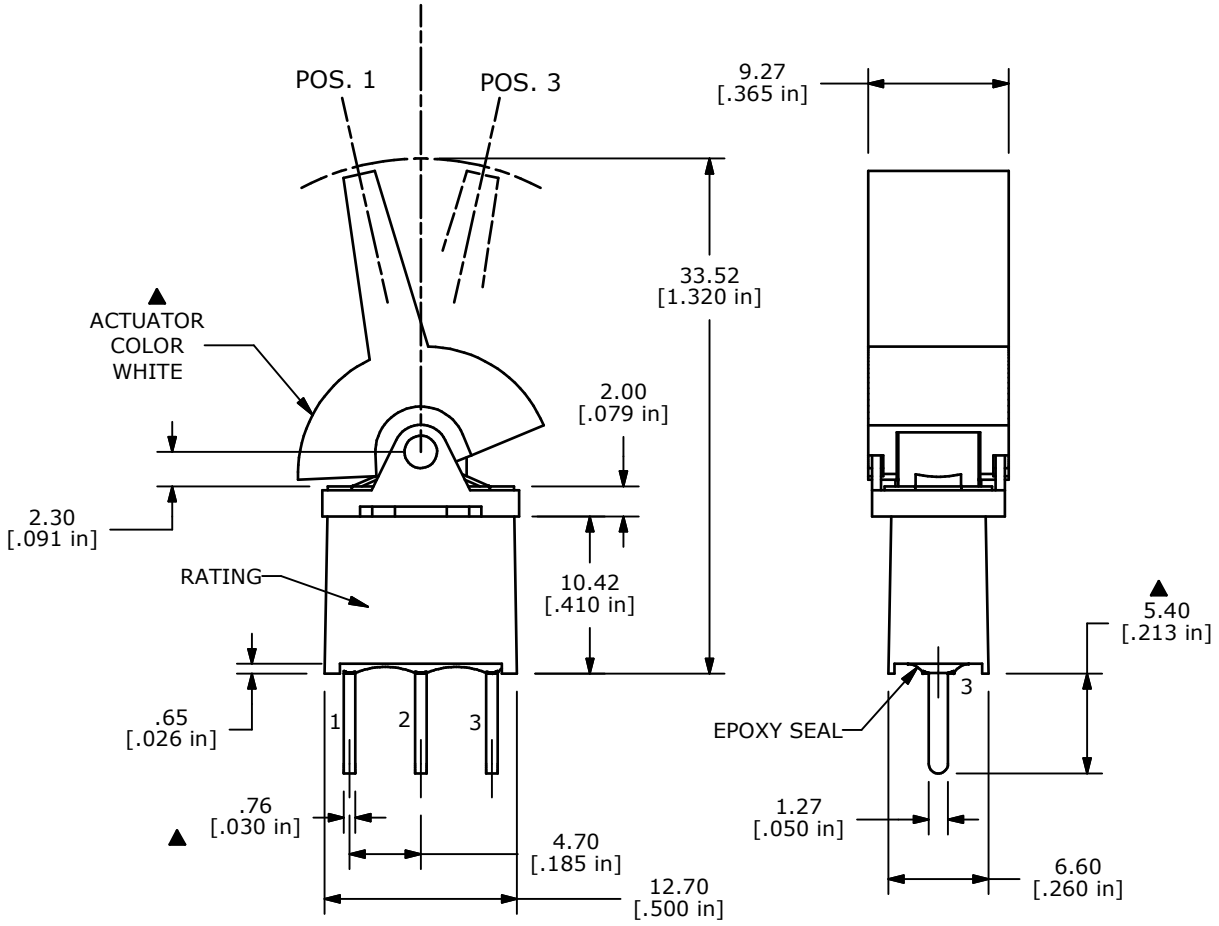

NOTE:
1. ALL DIMENSIONS IN MM [INCH]
2. GENERAL TOLERANCE: X.X=±0.4
   X.XX=±0.25
3. TERMINAL NUMBERS FOR REF ONLY
▲4. CONTACT MATERIAL: GOLD
5. RATING: 0.4 VA max. @ 20V (AC or DC)
6. LIFE EXPECTANCY: 30,000 MAKE-AND-BREAK CYCLES
   AT FULL LOAD.
7. INSULATION RESISTANCE: 1,000 MEGA-OHM MIN.
8. DIELECTRIC STRENGTH: 1,000 V RMS @SEA LEVEL.
9. OPERATING TEMP.: -30°C to 85°C
10. ▲ DENOTES CRITICAL PARAMETER.
11. 2002/95/EC (ROHS) COMPLIANT

REV	PCR NO	DESCRIPTION	DATE	BY
A	18289	RELEASED FOR PRODUCTION	11/4/08	BLR

THE INFORMATION CONTAINED IN THIS DOCUMENT IS PROPRIETARY TO E-SWITCH AND IS NOT TO BE COPIED OR TRANSFERRED

E-SWITCH™

TITLE 300AWSP4J2WHTM2RE

SCALE	DATE	DR	DWG	REV
2:1	11/4/2008	BLR	T301034	A