SHEET OF

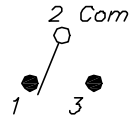

CIRCUIT: SPDT

SWITCH FUNCTION		
POS. 1	POS. 2	POS. 3
		
ON	OFF	ON
2-3	OPEN	2-1

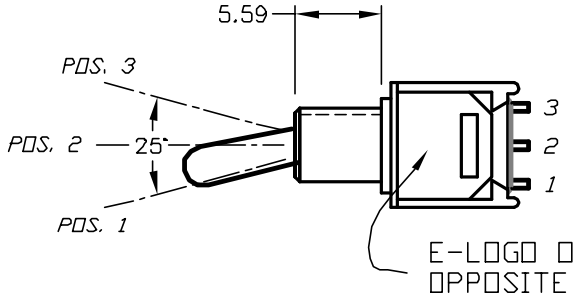

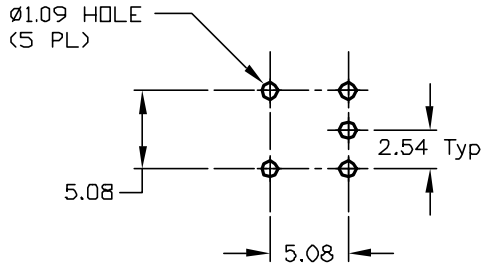

RECOMMENDED P.C.B LAYOUT

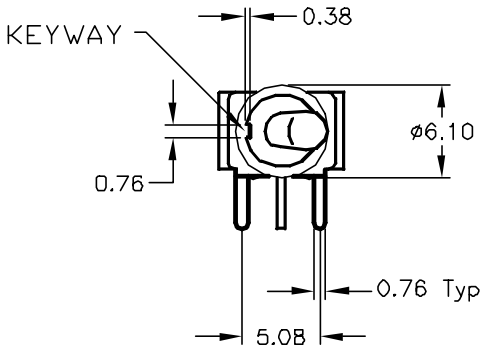

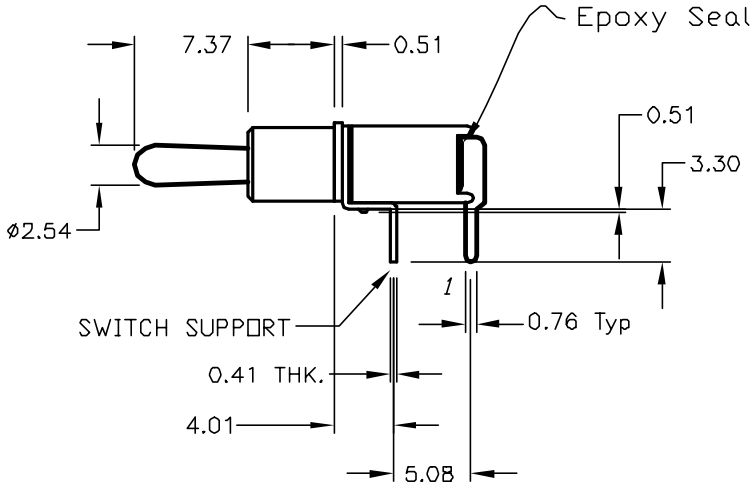

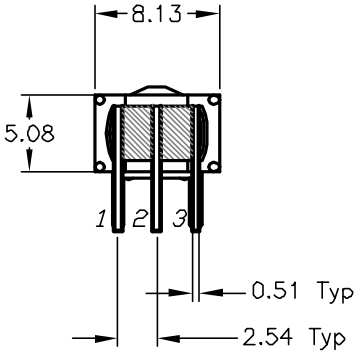

NOTES:

1. ALL DIMENSIONS IN MM
2. GENERAL TOLERANCE: X.X=±0.4
   X.XX=±0.25
3. TERM. NOS. FOR REF. ONLY
4. CONTACT RATING: 3A@ 120VAC or 28VDC;
   1A@ 250VAC
5. FIXED TERMINAL & MOVING CONTACT:
   Copper Alloy w/Silver plate
6. ELECTRIC LIFE: 30,000 make-and-break cycles
   at full load.
7. INSULATION RESISTANCE: 1,000 M ohm min.
8. DIELECTRIC STRENGTH: 1,000 V RMS @sea level.
9. OPERATING TEMP.: -30°C to 85°C

REV.	ECN No.	DESCRIPTION	DATE	CHKD
A	12325	REVISED AND REDRAWN	10/22/02	CJB

THE INFORMATION CONTAINED IN THIS DOCUMENT
IS PROPRIETARY TO E-SWITCH AND IS
NOT TO BE COPIED OR TRANSFERRED

E-SWITCH®

TITLE: 200 MSP-3 T3 B3 M6 Q E

SCALE	DATE	DR	DWG	REV
2:1	7/23/02	CJB	T213019	A