SHEET 1 OF 1

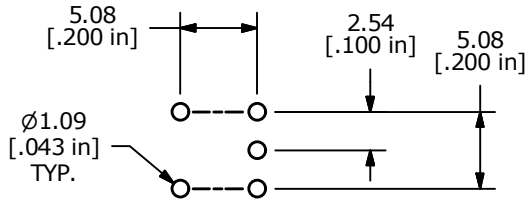

PC MOUNTING

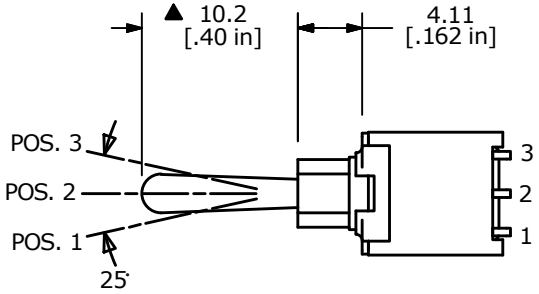

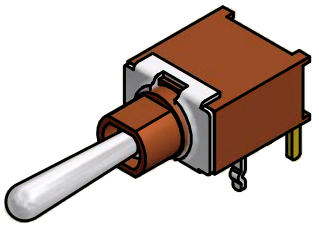

▲ SWITCH FUNCTION		
POS. 1	POS. 2	POS. 3
(ON)	OFF	(ON)
2-3	OPEN	2-1

(ON) = MOMENTARY

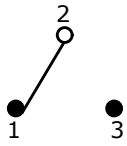

CIRCUIT: SPDT

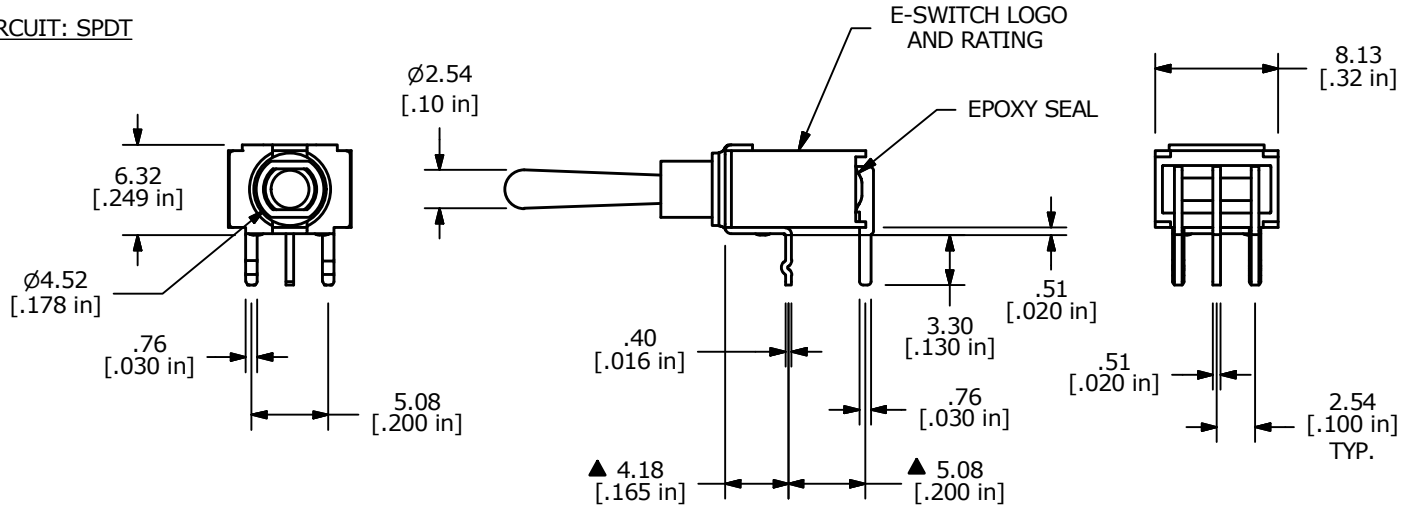

NOTE:
1. ALL DIMENSIONS IN MM [INCH]
2. GENERAL TOLERANCE: X.X = ±0.4
   X.XX = ±0.25
3. TERMINAL NUMBERS FOR REF ONLY
▲ 4. PLATING MATERIAL: GOLD
5. RATING: 0.4VOLT-AMPS MAX. @20V MAX. AC OR DC
6. CONTACT RESISTANCE: 20 Milli-OHMS MAX.
7. LIFE EXPECTANCY: 50,000 MAKE-AND-BREAK CYCLES
   AT FULL LOAD.
8. INSULATION RESISTANCE: 1,000 MEGA-OHM MIN.
9. DIELECTRIC STRENGTH: 1,000 V RMS @SEA LEVEL.
10. SEAL RATING: IP67
11. OPERATING TEMP.: -30°C to 85°C
12. ▲ DENOTES CRITICAL PARAMETER.

REV	PCR NO	DESCRIPTION	DATE	BY
A	22141	Release For Production	2/2/16	MW

THE INFORMATION CONTAINED IN THIS DOCUMENT IS PROPRIETARY
TO E-SWITCH AND IS NOT TO BE COPIED OR TRANSFERRED

E•SWITCH®

TITLE 200AWMSP4T1A1M61RE

SCALE	DATE	DR	DWG	REV
2:1	2/2/2016	MW	T201252	A