SHEET 1 OF 1

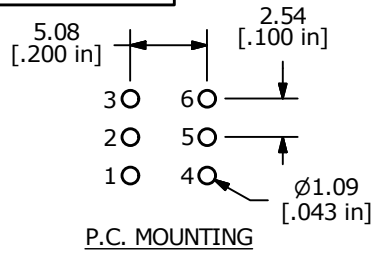

P.C. MOUNTING

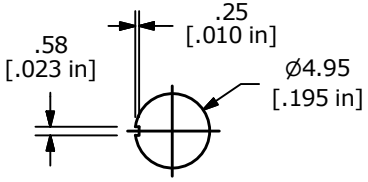

PANEL MOUNTING

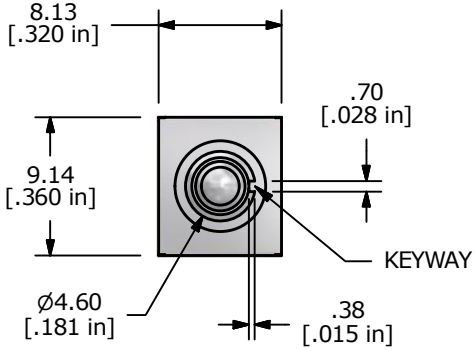

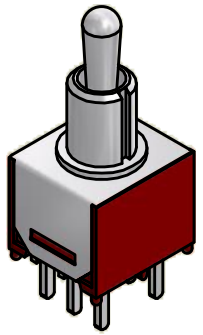

▲ SWITCH FUNCTION		
POS. 1	POS. 2	POS. 3
ON	OFF	ON
2-3, 5-6	OPEN	2-1, 5-4

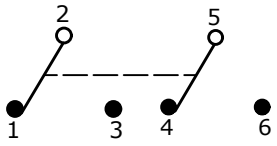

CIRCUIT: DPDT

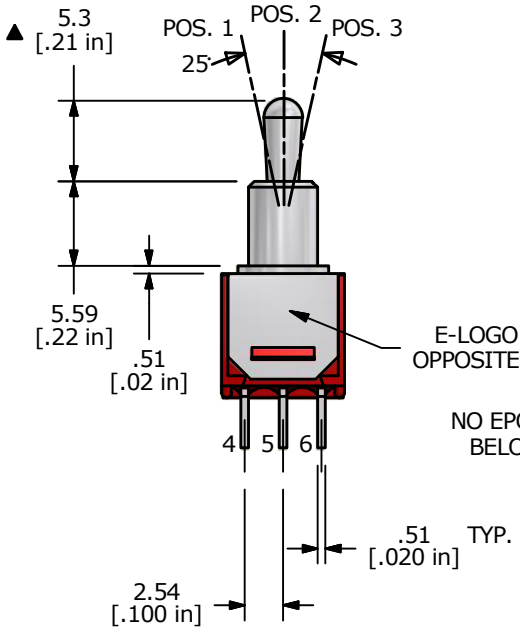

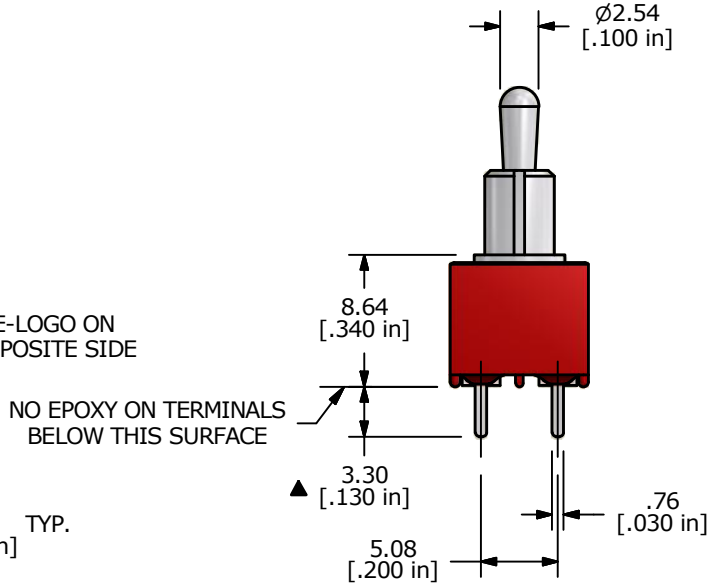

NOTE:
1. ALL DIMENSIONS IN MM [INCH]
2. GENERAL TOLERANCE: X.X = ±0.4
   X.XX = ±0.25
3. TERMINAL NUMBERS FOR REF ONLY
▲ 4. PLATING MATERIAL: GOLD
5. RATING: 3AMPS @120VAC OR 28VDC
   1AMP @250VAC
6. ELECTRIC LIFE: 30,000 MAKE-AND-BREAK CYCLES AT FULL LOAD.
7. INSULATION RESISTANCE: 1,000 MEGA-OHM MIN.
8. DIELECTRIC STRENGTH: 1,000 V RMS @SEA LEVEL.
9. OPERATING TEMP.: -30°C to 85°C
10. 2002/95/EC (ROHS) COMPLIANT
11. ▲ DENOTES CRITICAL PARAMETER.

REV	PCR NO	DESCRIPTION	DATE	BY
A	21861	RELEASE FOR PRODUCTION	06/01/15	MW

THE INFORMATION CONTAINED IN THIS DOCUMENT IS PROPRIETARY TO E-SWITCH AND IS NOT TO BE COPIED OR TRANSFERRED

E-SWITCH

TITLE 200MDP3T2B4M2RE

SCALE	DATE	DR	DWG	REV
2:1	6/1/2015	MW	T201251	A