T1P3002028-SP
20 W, 28V, 500 MHz—2GHz, Pulsed, Powerband™ pHEMT RF Power Transistor

Introduction

The T1P3002028-SP is a POWERBAND™ discrete pHEMT, depletion mode, RF Power transistor designed to operate from 500MHz to 2GHz in wide-band circuits. The device has an instantaneous band-width P1dB output power of 20watts across the entire band when operated in the TriQuint wide-band test fixture. The T1P3002028-SP can also be used in narrow band applications and is rated at 26Watts P1dB at 2GHz.

Figure 1. Available Packages



Features

- Pulse Characterization
- Exceptional Instantaneous band-width performance from 500MHz – 2GHz
- Increased efficiency results in significant advantages
  - Smaller and lighter systems
  - Reduced system component costs
  - Reduced energy consumption
- Typical Performance ratings
  - Wide-Band 500MHz-2GHz
    (as tested in TriQuint Wideband Fixture)
    - 10dB gain
    - 50% Efficiency
    - 20Watt P1dB
  - Narrow Band up to 2GHz
    - 12dB gain
    - 58% efficiency
    - 26Watt P1dB

Table 1. Maximum Ratings

Sym	Parameter	Value	Notes
V^+	Positive Supply Voltage	28 V	2/
V^-	Negative Supply Voltage Range	–5V to 0V	
I^+	Positive Supply Current	5.6A	2/
$\lvert I_G \rvert$	Gate Supply Current	70 mA	
P_D	Power Dissipation	See note 3	2/ 3/
T_{CH}	Operating Channel Temperature	150° C	4/

1/ These ratings represent the maximum operable values for this device.
2/ Combinations of supply voltage, supply current, input power, and output power shall not exceed P_D.
3/ For a median life time of 1E+6 hrs, Power dissipation is limited to: $P_D(max) = (150\ °C – TBASE\ °C) / 8.3\ (°C/W)$
4/ Junction operating temperature will directly affect the device median time to failure(T_M). For maximum life, it is recommended that junction temperatures be maintained at the lowest possible levels.

Table 2. Thermal Information

Parameter	Test Conditions	TCH (°C)	θJC (°C/W)	T_M (HRS)
θ_{JC} Thermal Resistance (channel to backside of carrier)	Vd = 10 V Idq = 900 mA Pdiss = 9 W	145	8.3	1.6E+6

Preliminary Data Sheet
Subject to Change

Electrical Characteristics

Recommended operating conditions apply unless otherwise specified: T_A = 25 °C.

Table 3. dc Characteristics

Parameter	Symbol	Min	Typ	Max	Unit
Saturated Drain Current	Idss	—	2500	—	mA
Transconductance	Gm	—	2000	—	mS
Pinch-off Voltage	V_P	-1.5	-1	-0.6	V
Breakdown Voltage Gate-Source	V_{BGS}	-40	—	-30	V
Breakdown Voltage Gate-Drain	V_{BGD}	-45	—	-35	V

Table 4. RF Characteristics

Parameter	Symbol	Min	Typ	Max	Unit
Functional Tests, Instantaneous Band-Width 100uS, 10% (Tested in TriQuint's Wide-Band Test Fixture)					
Gain @ P1dB, 500MHz-2GHz (VDS = 28 V, POUT = 20 W, IDD = 240 mA)	G	—	10	—	dB
P1dB, 500MHz-2GHz (VDS = 28 V, POUT = 20 W, IDD = 240 mA)	P1dB	—	20	—	W
Power Added Efficiency, 500MHz-2GHz (VDS = 28 V, POUT = 20 W, IDD = 240 mA)	—	—	45	—	%
Functional Tests, Narrow Band RF Performance 100uS, 10% (2GHz)					
Gain (VDS = 28 V, POUT = 26 W, IDQ = 240 mA)	G	—	12	—	dB
Output Power (VDS = 28 V, 1 dB compression, IDQ = 240 mA)	P1dB	—	26	—	W
Drain Efficiency (VDS = 28 V, POUT = P1dB, IDQ = 240 mA)	—	—	58	—	%
Ruggedness (VDS = 28 V, POUT = 26 W, IDQ =240 mA, f = 500 MHz, VSWR = 3:1, all angles)	—	No degradation in output power.			

Preliminary Data Sheet
Subject to Change

Figure 2. P1dB & Efficiency (Narrow Band Performance Plotted over Frequency)

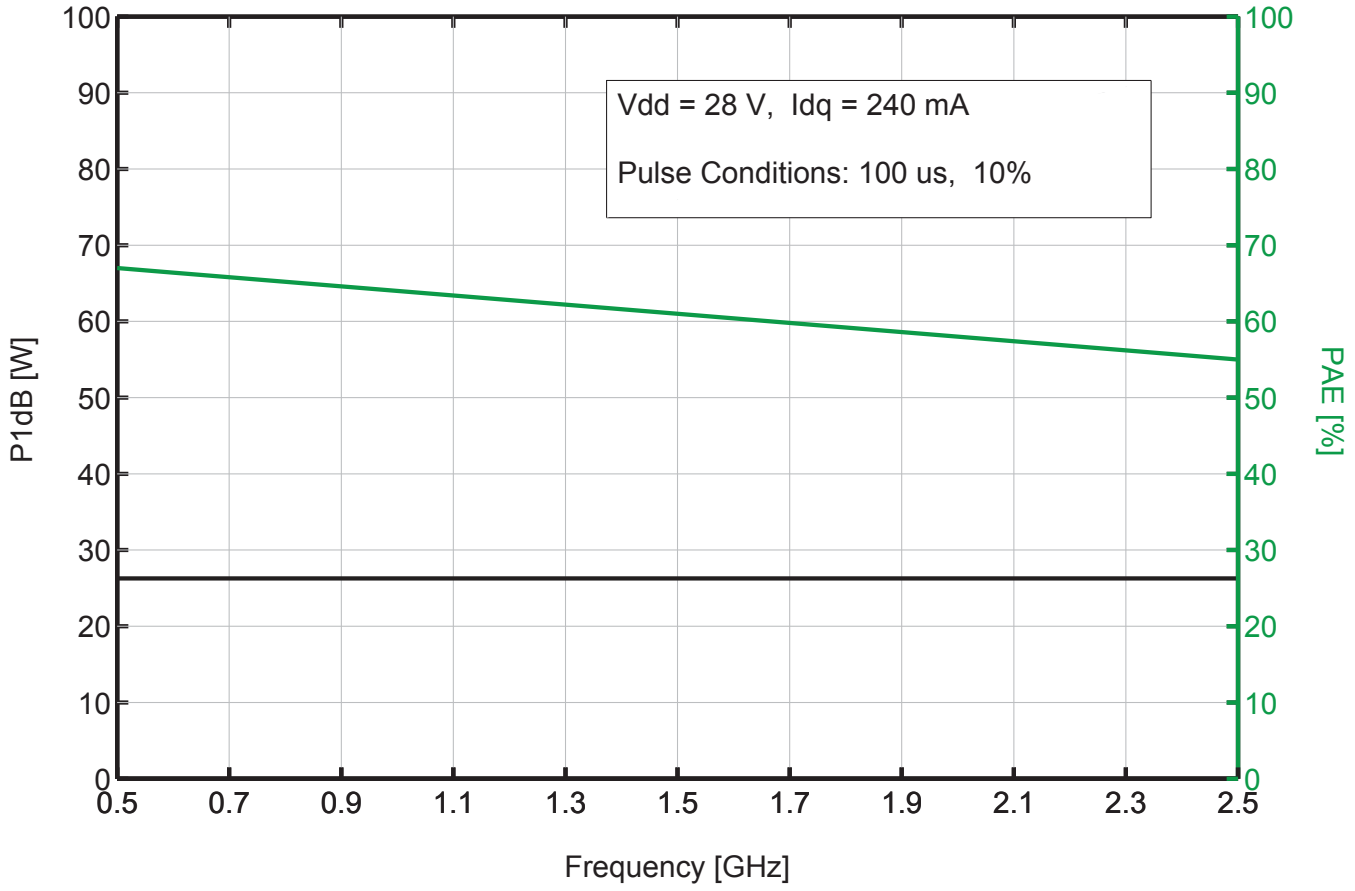

Preliminary Data Sheet
Subject to Change

Figure 3. P1dB & Gain (Narrow Band Performance Plotted over Frequency)

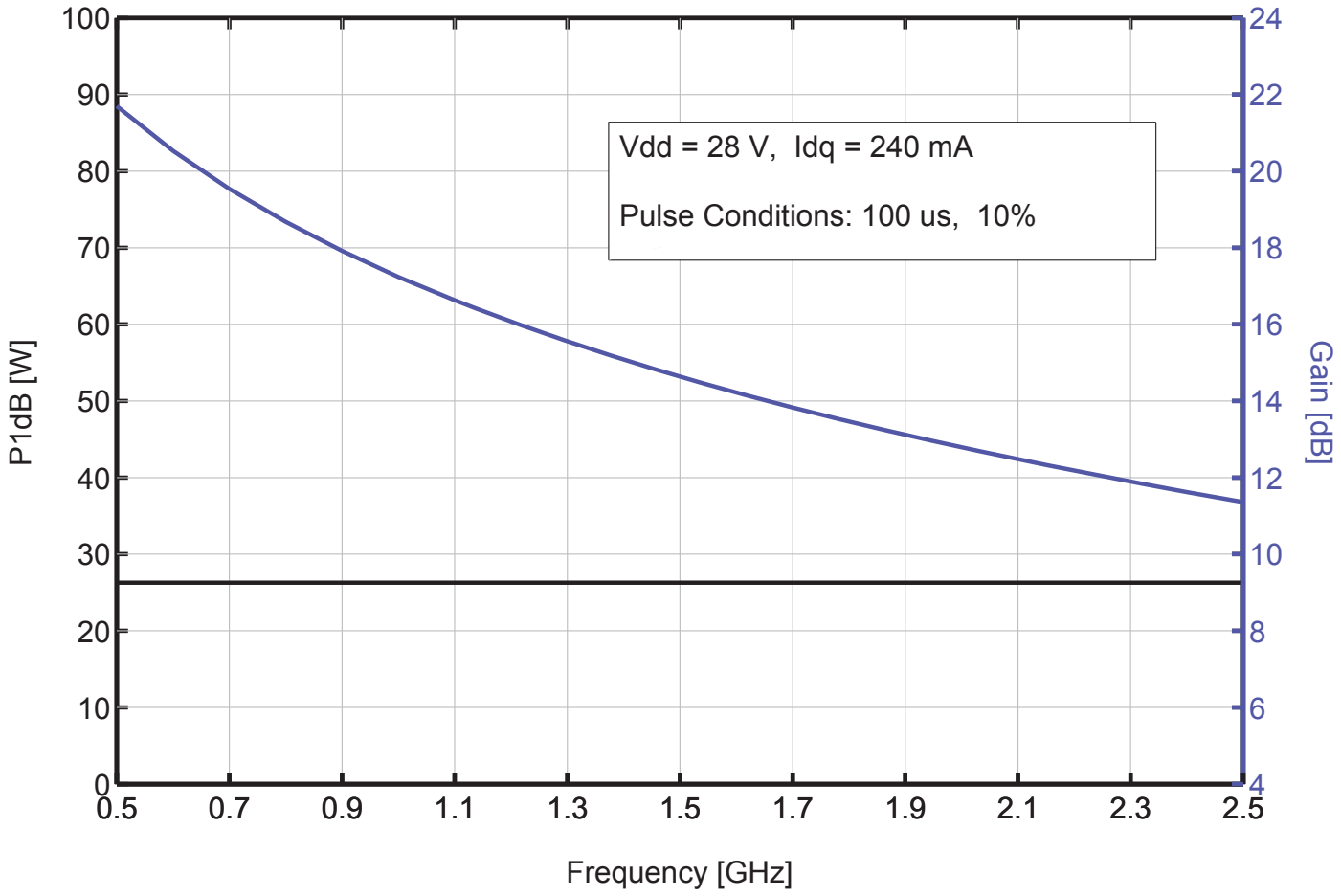

Preliminary Data Sheet
Subject to Change

Figure 4. Plot of impedances to be presented to the Source & Load of the device for optimal RF performance

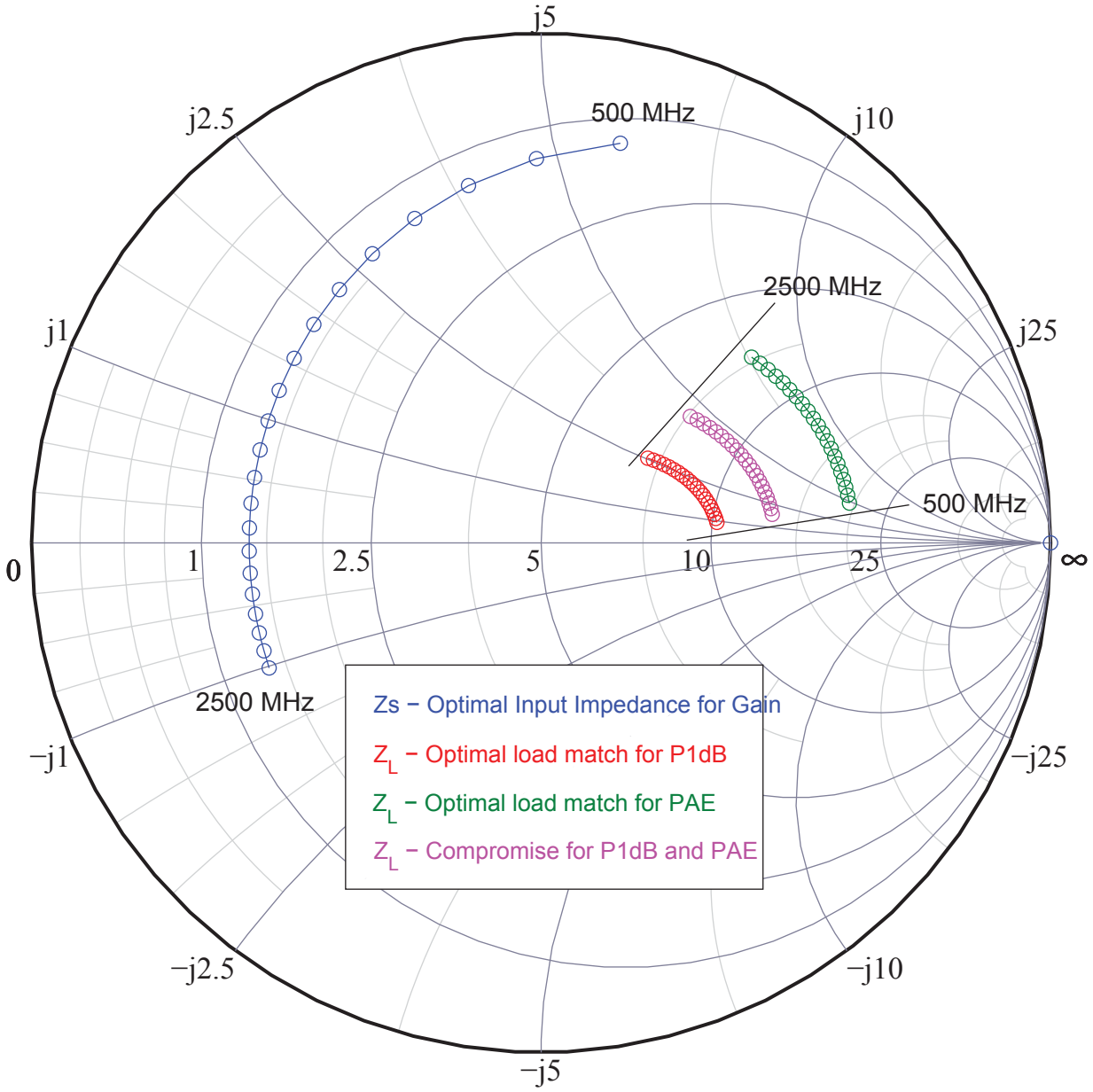

Preliminary Data Sheet
Subject to Change

Table 5. Table of RF performance that the device typically exhibits when placed in the specified impedance environment. The impedances are not the impedances of the device, they are the impedances presented to the device via an RF circuit or Load-pull system. The data is representative of typical device performance for both 100uSecond pulse width, 10% duty cycle conditions and 1000uSecond pulse width, 10% duty cycle conditions.

frequency	gamma-in (real)	gamma-in (imag)	Z-in (real)	Z-in (imag)	gamma-out (real)	gamma-out (imag)	Z-out (real)	Z-out (real)	Gain	P1db [W]	P1db [dBm]	PAE [%]
500	-0.922	0.221	1.35	5.90	-0.576	0.049	13.39	1.96	21.70	26.0	44.2	68
600	-0.931	0.179	1.35	4.75	-0.580	0.058	13.21	2.32	20.53	26.0	44.2	67
700	-0.936	0.147	1.35	3.90	-0.585	0.067	13.00	2.65	19.54	26.0	44.2	67
800	-0.939	0.123	1.35	3.24	-0.590	0.075	12.76	2.96	18.68	26.0	44.2	66
900	-0.942	0.103	1.35	2.71	-0.596	0.083	12.51	3.25	17.92	26.0	44.2	65
1000	-0.943	0.086	1.35	2.27	-0.602	0.090	12.23	3.51	17.24	26.0	44.2	65
1100	-0.945	0.071	1.35	1.88	-0.609	0.097	11.94	3.74	16.63	26.0	44.2	64
1200	-0.945	0.059	1.35	1.55	-0.616	0.104	11.64	3.95	16.07	26.0	44.2	63
1300	-0.946	0.048	1.35	1.26	-0.623	0.110	11.33	4.14	15.56	26.0	44.2	63
1400	-0.946	0.038	1.35	0.99	-0.631	0.115	11.01	4.29	15.08	26.0	44.2	62
1500	-0.947	0.028	1.35	0.75	-0.639	0.120	10.69	4.42	14.64	26.0	44.2	62
1600	-0.947	0.020	1.35	0.52	-0.647	0.124	10.36	4.53	14.22	26.0	44.2	61
1700	-0.947	0.012	1.35	0.31	-0.656	0.127	10.04	4.62	13.83	26.0	44.2	60
1800	-0.947	0.005	1.35	0.12	-0.665	0.130	9.71	4.68	13.47	26.0	44.2	60
1900	-0.947	-0.003	1.35	-0.07	-0.673	0.133	9.39	4.72	13.12	26.0	44.2	59
2000	-0.947	-0.009	1.35	-0.24	-0.682	0.135	9.08	4.74	12.79	26.0	44.2	58
2100	-0.947	-0.016	1.35	-0.41	-0.691	0.136	8.77	4.74	12.48	26.0	44.2	58
2200	-0.947	-0.022	1.35	-0.57	-0.699	0.137	8.47	4.72	12.18	26.0	44.2	57
2300	-0.947	-0.027	1.35	-0.72	-0.708	0.138	8.17	4.69	11.89	26.0	44.2	56
2400	-0.947	-0.033	1.35	-0.87	-0.716	0.138	7.89	4.65	11.62	26.0	44.2	56
2500	-0.946	-0.039	1.35	-1.02	-0.725	0.138	7.61	4.59	11.36	26.0	44.2	55

Note: Data sheet will be updated with TriQuint wide-band test fixture characterization data in the near future.

Preliminary Data Sheet
Subject to Change

Package Dimensions

Note: All dimensions in inches. Scale 8:1

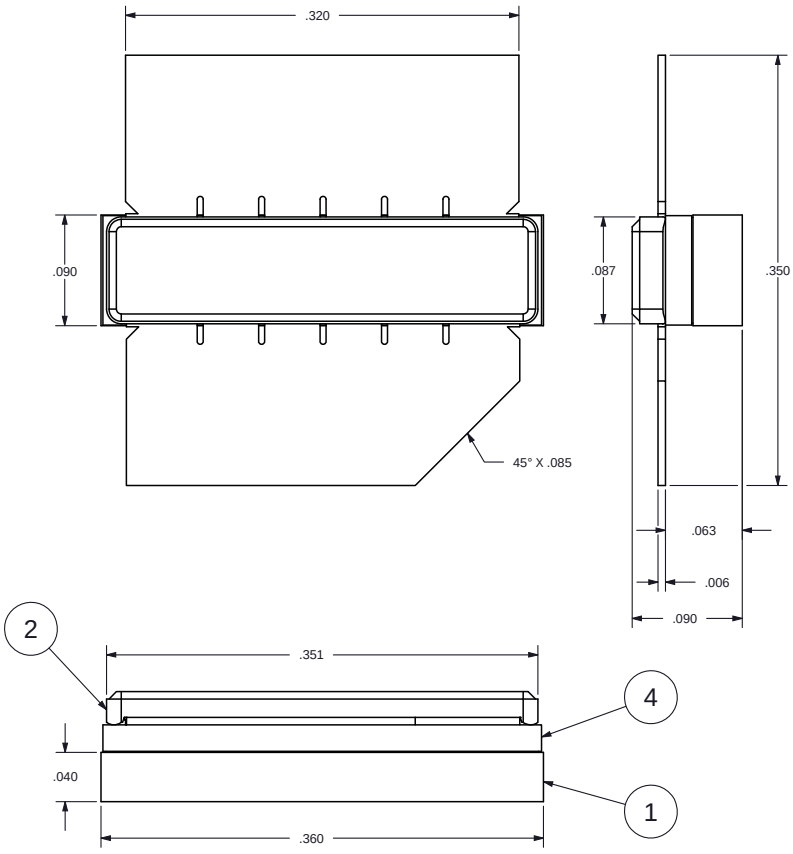

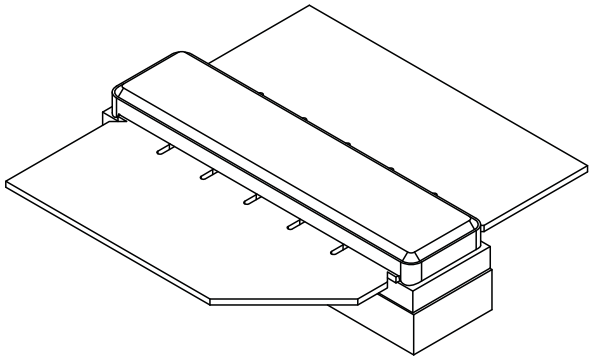

Preliminary Data Sheet
Subject to Change