U Interface Transformer (2B1Q Coding Applications)

Designed for use with SGS-Thomson SD 5411

Turns Ratio (± 3 %) (Line : Chip)	1.50 : 1

PARAMETER	MIN.	MAX.	UNITS
Primary Inductance (Line Side) Pins 4 to 2 with 1 & 5 shorted.	14.1	15.9	mH
Primary DC Resistance		16	ohms
Secondary DC Resistance		2.5	ohms
Isolation (Hi-Pot)	3000		V_{RMS}
DC Bias		60	mA
Return Loss 10KHz & 25 KHz	20		dB
Longitudinal Balance (281 Hz to 40 KHz)	55		dB

REINFORCED INSULATION

Flammability: Materials used in the production of these units meet requirements of UL94-VO and IEC 695-2-2 needle flame test.

A Surface Mount Version of this part is available
add suffix "G" to part number

NOTE:
Operating Temp. Range -40°C to +85°C

Primary is Line Side (Pins 1,2,4,5)
Secondary is Chip Side (Pins 7,8,9)

Surge Voltage Capability

Metallic Voltage: 800 V peak, 10 / 560 µS

Longitudinal Voltage: 2400 V peak, 10 / 700 µS

Physical Dimensions
inches (mm)

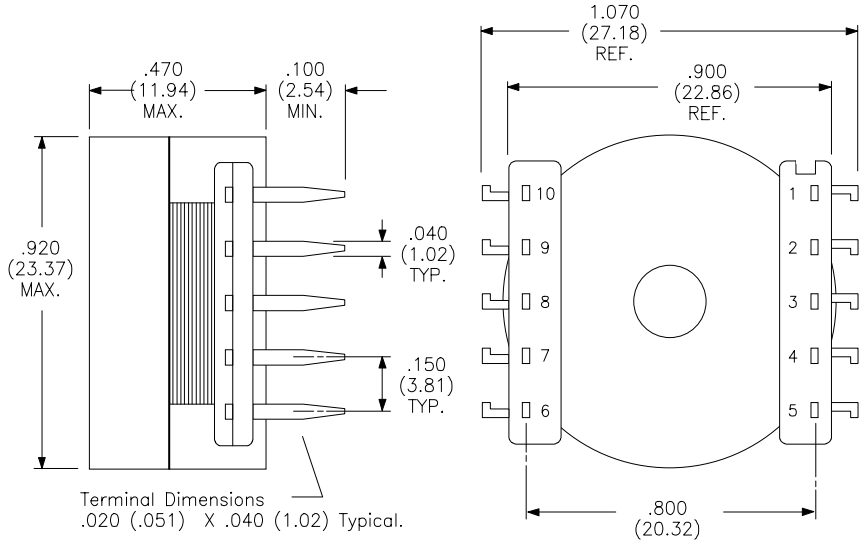

Termination Numbers for Reference Only.

Notch Indicates Pin #1

Schematic Diagram

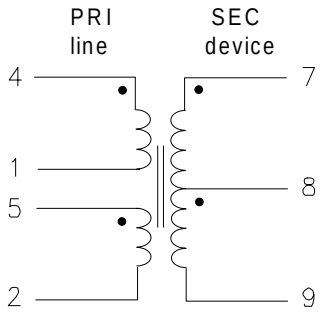

RHOMBUS P/N: T-13219	
CUST P/N:	NAME:
DATE: 7/2/96	SHEET: 1 of 1

Rhombus Industries Inc.
Transformers & Magnetic Products

15801 Chemical Lane, Huntington Beach, CA 92649
Phone: (714) 898-0960
FAX: (714) 896-0971

www.rhombus-ind.com