ISDN U-Interface Transformer P / N T-1269

Turns Ratio	(PRI : SEC)	1:1.5 : ± 1%
	(1-2 : 3-4)	1.58 : 1
	(5-6 : 7-8)	1 : 1

Parameter	Min.	Typ.	Max.	Units
Inductance 5-8 (6-7, shorted)	21.6	27	32.4	mH
Return Loss At 40 kHz	28			dB
Total Harmonic Distortion [1]			70	dB
DC Resistance 1 - 2 DC Resistance 3 - 4 DC Resistance 5 - 6 DC Resistance 7 - 8	1.80 1.45 4.00 4.00		2.20 1.80 5.00 5.00	Ω Ω Ω Ω
Hi-Pot Primary to Secondary	500			V_{RMS}

1. With 90 mADC through SEC and 40 kHz sine wave injected into the PRI at a level which generates 5V p-p into 135 ohms at the SEC.

Schematic Diagram

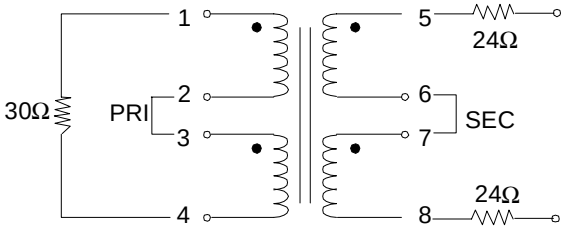

Designed to meet the requirements for national ISDN U-INTERFACE chip TP3410

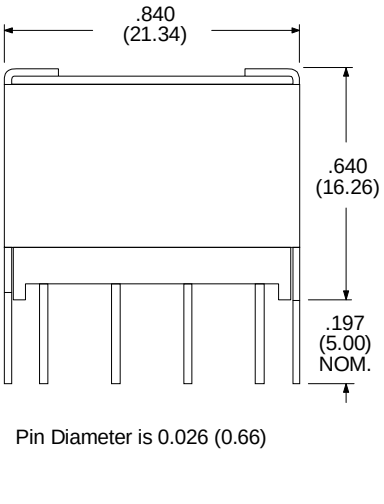

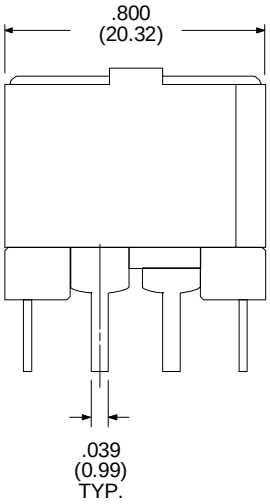

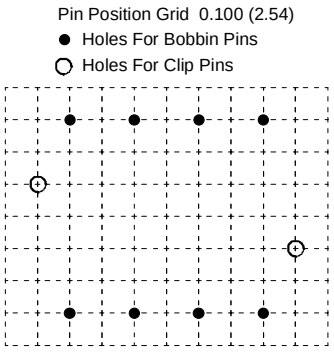

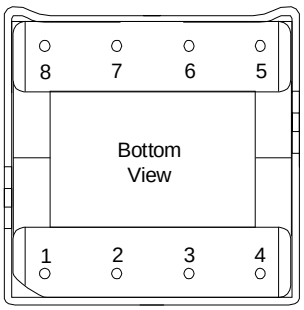

Physical Dimensions

inches (mm)

9/8/99

Rhombus Industries Inc.
Transformers & Magnetic Products

15801 Chemical Lane, Huntington Beach, CA 92649
Phone: (714) 898-0960
FAX: (714) 896-0971

www.rhombus-ind.com