64KBPS Interface Transformer

Turns Ratio (± 3%)	1CT:1

PARAMETER	MIN.	MAX.	UNITS
Open Circuit Inductance	10		mHy
Leakage Inductance		0.5	µHy
Interwinding Capacitance ($C_{W/W}$)		120	pF
Primary DC Resistance		2.5	ohms
Secondary DC Resistance		2.5	ohms
Isolation (HI-POT)	2.0 K		V_{RMS}

TEST CONDITIONS:
Oscillation Voltage = 20mV
Oscillation Frequency = 10.0 KHz

Flammability: Materials used in the production of these units are UL94-VO and meet requirements of IEC 695-2-2 needle flame test.

MEETS THE PULSE WAVEFORM TEMPLATE OF CCITT I.430.

Primary is Line Side

Unbalanced current at TE: Δ Idc = 1 mA max.

Longitudinal Conversion Loss - 10KHz to 300 KHz: 60dB min.

SCHEMATIC DIAGRAM

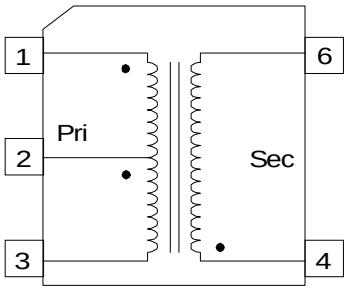

PHYSICAL DIMENSIONS
inches (mm)

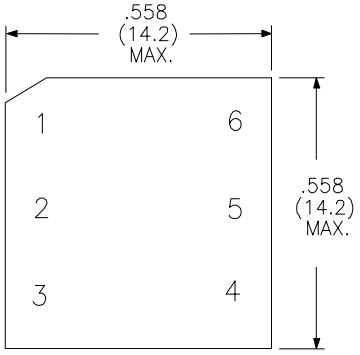

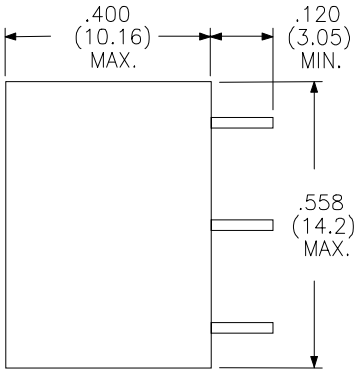

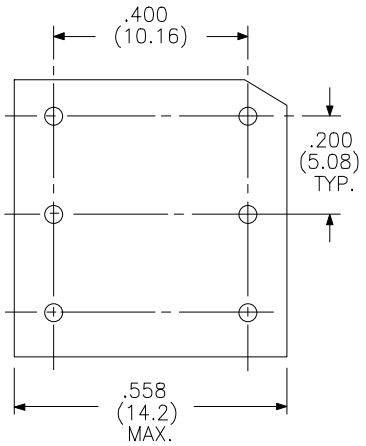

UNUSED PINS OMITTED

RHOMBUS P/N: **T-11602**	
CUST P/N:	NAME:
DATE: **8/24/95**	SHEET: 1 OF 1

Rhombus Industries Inc.
Transformers & Magnetic Products

www.rhombus-ind.com

15801 Chemical Lane,
Huntington Beach, CA 92649-1595
Phone: (714) 898-0960 • FAX: (714) 896-0971