

Signal Analysis PICtail™ Daughter Board User's Guide

© 2004 Microchip Technology Inc.

Note the following details of the code protection feature on Microchip devices:

- Microchip products meet the specification contained in their particular Microchip Data Sheet.
- Microchip believes that its family of products is one of the most secure families of its kind on the market today, when used in the intended manner and under normal conditions.
- There are dishonest and possibly illegal methods used to breach the code protection feature. All of these methods, to our knowledge, require using the Microchip products in a manner outside the operating specifications contained in Microchip's Data Sheets. Most likely, the person doing so is engaged in theft of intellectual property.
- Microchip is willing to work with the customer who is concerned about the integrity of their code.
- Neither Microchip nor any other semiconductor manufacturer can guarantee the security of their code. Code protection does not mean that we are guaranteeing the product as "unbreakable."

Code protection is constantly evolving. We at Microchip are committed to continuously improving the code protection features of our products. Attempts to break Microchip's code protection feature may be a violation of the Digital Millennium Copyright Act. If such acts allow unauthorized access to your software or other copyrighted work, you may have a right to sue for relief under that Act.

Information contained in this publication regarding device applications and the like is intended through suggestion only and may be superseded by updates. It is your responsibility to ensure that your application meets with your specifications. No representation or warranty is given and no liability is assumed by Microchip Technology Incorporated with respect to the accuracy or use of such information, or infringement of patents or other intellectual property rights arising from such use or otherwise. Use of Microchip's products as critical components in life support systems is not authorized except with express written approval by Microchip. No licenses are conveyed, implicitly or otherwise, under any intellectual property rights.

Trademarks

The Microchip name and logo, the Microchip logo, Accuron, dsPIC, KEELOQ, microID, MPLAB, PIC, PICmicro, PICSTART, PRO MATE, PowerSmart, rfPIC, and SmartShunt are registered trademarks of Microchip Technology Incorporated in the U.S.A. and other countries.

AmpLab, FilterLab, MXDEV, MXLAB, PICMASTER, SEEVAL, SmartSensor and The Embedded Control Solutions Company are registered trademarks of Microchip Technology Incorporated in the U.S.A.

Analog-for-the-Digital Age, Application Maestro, dsPICDEM, dsPICDEM.net, dsPICworks, ECAN, ECONOMONITOR, FanSense, FlexROM, fuzzyLAB, In-Circuit Serial Programming, ICSP, ICEPIC, Migratable Memory, MPASM, MPLIB, MPLINK, MPSIM, PICkit, PICDEM, PICDEM.net, PICLAB, PICtail, PowerCal, PowerInfo, PowerMate, PowerTool, rfLAB, rfPICDEM, Select Mode, Smart Serial, SmartTel and Total Endurance are trademarks of Microchip Technology Incorporated in the U.S.A. and other countries.

SQTP is a service mark of Microchip Technology Incorporated in the U.S.A.

All other trademarks mentioned herein are property of their respective companies.

© 2004, Microchip Technology Incorporated, Printed in the U.S.A., All Rights Reserved.

Printed on recycled paper.

QUALITY MANAGEMENT SYSTEM
CERTIFIED BY DNV
ISO/TS 16949:2002

Microchip received ISO/TS-16949:2002 quality system certification for its worldwide headquarters, design and wafer fabrication facilities in Chandler and Tempe, Arizona and Mountain View, California in October 2003. The Company's quality system processes and procedures are for its PICmicro® 8-bit MCUs, KEELOQ® code hopping devices, Serial EEPROMs, microperipherals, nonvolatile memory and analog products. In addition, Microchip's quality system for the design and manufacture of development systems is ISO 9001:2000 certified.

© 2004 Microchip Technology Inc.

Table of Contents

Preface 1

Chapter 1. Signal Analysis PICtail™ Daughter Board

1.1 Introduction 7
1.2 Highlights 7
1.3 Signal Analysis PICtail Daughter Board Kit Contents 7
1.4 Signal Analysis PICtail Daughter Board 7
1.5 PIC16F684 Firmware 10

Chapter 2. Using the PICkit™ 1 Signal Analysis PC Application

2.1 Introduction 13
2.2 Highlights 13
2.3 Programming PICA2Dlab Into The PIC16F684 13
2.4 Mode Selection 15
2.5 Oscilloscope Plot 17
2.6 FFT (Fast Fourier Transform) 18
2.7 Histogram 20

Chapter 3. Lesson Projects

3.1 Introduction 21
3.2 Highlights 21
3.3 Lesson 1 – Thermistor 21
3.4 Lesson 2 – Photodiode 23
3.5 Lesson 3 – Pulse Width Modulated Generated Sine Wave 26

Chapter 4. Troubleshooting

4.1 Introduction 27
4.2 Common Problems 27

Appendix A. Hardware Schematics

A.1 Introduction 29

Worldwide Sales and Service 30

© 2004 Microchip Technology Inc.

NOTES:

© 2004 Microchip Technology Inc.

Preface

INTRODUCTION

This chapter contains general information about this user's guide and customer support that will be useful prior to using the Signal Analysis PICtail Daughter Board.

HIGHLIGHTS

Items discussed in this chapter are:

- About this Guide
- Warranty Registration
- Recommended Reading
- Troubleshooting
- The Microchip Web Site
- Development Systems Customer Notification Service
- Customer Support

ABOUT THIS GUIDE

This document describes how to use the Signal Analysis PICtail Daughter Board and the PICkit™ 1 Signal Analysis PC Application using the PICkit 1 Flash Starter Kit. The manual layout is as follows:

- **Chapter 1: Signal Analysis PICtail Daughter Board** – An overview of the Signal Analysis PICtail Daughter Board. It describes the PCB layout, parts and electrical connection to the PICkit 1 Flash Starter Kit.
- **Chapter 2: Using the PICkit 1 Signal Analysis PC Application** – This chapter explains the operation of the PICkit 1 Signal Analysis PC Application.
- **Chapter 3: Lesson Projects** – Lessons that describe the different concepts in controlling the signal analysis of the PIC microcontroller.
- **Chapter 4: Troubleshooting** – This chapter provides resolutions for solving common problems associated with using the Signal Analysis PICtail Daughter Board and steps on how to resolve them.
- **Appendix A: Hardware Schematics** – Illustrates the Signal Analysis PICtail Daughter Board hardware schematic diagrams.

© 2004 Microchip Technology Inc.

Conventions Used in This Guide

This manual uses the following documentation conventions:

DOCUMENTATION CONVENTIONS

Description	Represents	Examples
Code (Courier font):		
Plain characters	Sample code Filenames and paths	`#define START` `c:\autoexec.bat`
Angle brackets: < >	Variables	`<label>, <exp>`
Square brackets [ ]	Optional arguments	`MPASMWIN [main.asm]`
Curly brackets and pipe character: { | }	Choice of mutually exclusive arguments; An OR selection	`errorlevel {0|1}`
Lower case characters in quotes	Type of data	`"filename"`
Ellipses...	Used to imply (but not show) additional text that is not relevant to the example	`list ["list_option..., "list_option"]`
0xnnn	A hexadecimal number where n is a hexadecimal digit	`0xFFFF, 0x007A`
Italic characters	A variable argument; it can be either a type of data (in lower case characters) or a specific example (in upper case characters).	`char isascii (char, ch);`
Interface (Arial font):		
Underlined, italic text with right arrow	A menu selection from the menu bar	*File > Save*
Bold characters	A window or dialog button to click	**OK**, **Cancel**
Characters in angle brackets < >	A key on the keyboard	<Tab>, <Ctrl-C>
Documents (Arial font):		
Italic characters	Referenced books	*MPLAB IDE User's Guide*

Documentation Updates

All documentation becomes dated, and this user's guide is no exception. Since the *Signal Analysis PICtail Daughter Board User's Guide* and other Microchip tools are constantly evolving to meet customer needs, some actual dialogs and/or tool descriptions may differ from those in this document. Please refer to our web site to obtain the latest documentation available.

Documentation Numbering Conventions

Documents are numbered with a "DS" number. The number is located on the bottom of each page, in front of the page number. The numbering convention for the DS Number is: DSXXXXXA, where:

XXXXX = The document number.

A = The revision level of the document.

© 2004 Microchip Technology Inc.

WARRANTY REGISTRATION

Please complete the enclosed Warranty Registration Card and mail it promptly. Sending in your Warranty Registration Card entitles you to receive new product updates. Interim software releases are available at the Microchip web site.

RECOMMENDED READING

This user's guide describes how to use the Signal Analysis PICtail Daughter Board and the PICkit 1 Signal Analysis PC Application using the PICkit 1 Flash Starter Kit. Other useful documents are listed below:

PICkit 1 Flash Starter Kit User's Guide (DS40051)

Consult this document for instructions on how to use the PICkit 1 Flash Starter Kit hardware and software. (This document can be found on the PICkit 1 Flash Starter Kit CD-ROM (DS40049) included with the Signal Analysis PICtail Daughter Board Kit.)

PIC16C745/765 Data Sheet (DS41124)

Consult this document for information regarding the PIC16C745 8-pin based, 8-bit CMOS Microcontroller with USB device specifications.

PIC16F684 Data Sheet (DS41202)

Consult this document for information regarding the PIC16F684 14-pin Flash based, 8-bit CMOS Microcontroller device specifications.

MPLAB IDE User's Guide (DS51025)

Consult this document for more information pertaining to the installation and features of the MPLAB Integrated Development Environment (IDE) Software.

MXLAB User's Guide (DS51220)

Consult this document for more information regarding the Strip Chart, FFT and Histogram functions. (This document is only available on the Microchip web site.)

Microchip Web Site

The Microchip web site (www.microchip.com) contains a wealth of documentation. Individual data sheets, application notes, tutorials and user's guides are all available for easy download. All documentation is in Adobe® Acrobat® (pdf) format.

TROUBLESHOOTING

See Chapter 4 for information on common problems.

THE MICROCHIP WEB SITE

Microchip provides on-line support on the Microchip World Wide Web (WWW) site. The web site is used by Microchip as a means to make files and information easily available to customers. To view the site, you must have access to the Internet and a web browser, such as, Netscape Navigator® or Microsoft® Internet Explorer.

The Microchip web site is available by using your favorite Internet browser to reach:

www.microchip.com

The web site provides a variety of services. Users may download files for the latest development tools, data sheets, application notes, user's guides, articles and sample programs. A variety of information specific to the business of Microchip is also available, including listings of Microchip sales offices, distributors and factory representatives.

Technical Support

- Frequently Asked Questions (FAQ)
- On-line Discussion Groups – conferences for products, development systems, technical information and more
- Microchip Consultant Program Member Listing
- Links to other useful web sites related to Microchip products

Engineer's Toolbox

- Design Tips
- Device Errata

Other Available Information

- Latest Microchip Press Releases
- Listing of seminars and events
- Job Postings

DEVELOPMENT SYSTEMS CUSTOMER NOTIFICATION SERVICE

Microchip started the customer notification service to help our customers keep current on Microchip products with the least amount of effort. Once you subscribe, you will receive e-mail notification whenever we change, update, revise or have errata related to your specified product family or development tool of interest.

Go to the Microchip web site at (www.microchip.com) and click on Customer Change Notification. Follow the instructions to register.

The Development Systems product group categories are:

- Compilers
- Emulators
- In-Circuit Debuggers
- MPLAB IDE
- Programmers

Here is a description of these categories:

Compilers – The latest information on Microchip C compilers and other language tools. These include the MPLAB C17, MPLAB C18 and MPLAB C30 C compilers; MPASM™ and MPLAB ASM30 assemblers; MPLINK™ and MPLAB LINK30 object linkers; MPLIB™ and MPLAB LIB30 object librarians.

Emulators – The latest information on Microchip in-circuit emulators. This includes the MPLAB ICE 2000 and MPLAB ICE 4000.

In-Circuit Debuggers – The latest information on the Microchip in-circuit debugger, MPLAB ICD 2.

MPLAB IDE – The latest information on Microchip MPLAB IDE, the Windows® Integrated Development Environment for development systems tools. This list is focused on the MPLAB IDE, MPLAB SIM and MPLAB SIM30 simulators, MPLAB IDE Project Manager and general editing and debugging features.

Programmers – The latest information on Microchip device programmers. These include the MPLAB PM3 and PRO MATE® II device programmers and PICSTART® Plus development programmer.

© 2004 Microchip Technology Inc.

CUSTOMER SUPPORT

Users of Microchip products can receive assistance through several channels:

- Distributor or Representative
- Local Sales Office
- Field Application Engineer (FAE)
- Corporate Applications Engineer (CAE)
- Hotline

Customers should call their distributor, representative or field application engineer (FAE) for support. Local sales offices are also available to help customers. See the back cover for a list of sales offices and locations.

Corporate Applications Engineers (CAEs) may be contacted at (480) 792-7627.

In addition, there is a Systems Information and Upgrade Line. This line provides system users a list of the latest versions of all of Microchip's development systems software products. Plus, this line provides information on how customers can receive any currently available upgrade kits.

The Hotline Numbers are:

1-800-755-2345 for U.S. and most of Canada.

1-480-792-7302 for the rest of the world.

NOTES:

© 2004 Microchip Technology Inc.

Chapter 1. Signal Analysis PICtail™ Daughter Board

1.1 INTRODUCTION

This chapter introduces the Signal Analysis PICtail™ Daughter Board. It describes the PCB layout, parts and electrical connection to the PICkit 1 Flash Starter Kit.

1.2 HIGHLIGHTS

This chapter discusses:

- The Signal Analysis PICtail Daughter Board Contents
- The Signal Analysis PICtail Daughter Board Hardware
- The Acquisition Firmware

1.3 SIGNAL ANALYSIS PICtail DAUGHTER BOARD KIT CONTENTS

The Signal Analysis PICtail Daughter Board Kit contains the following items:

1. The Signal Analysis PICtail Daughter Board Printed Circuit Board (PCB)
2. PICkit 1 Flash Starter Kit CD-ROM Version 2.0 (or later) (DS40049)
3. Pre-programmed PIC16C745 PICmicro® device with USB Version 2.0.0 (or later)

1.4 SIGNAL ANALYSIS PICtail DAUGHTER BOARD

The Signal Analysis PICtail Daughter Board works as an extension to the PICkit 1 Flash Starter Kit. When combined with PICkit 1 V2.0.0 (or later) firmware and the PICkit 1 Signal Analysis PC Application, the Signal Analysis PICtail Daughter Board can perform signal analysis capabilities such as:

- Real-time Strip Chart
- Oscilloscope
- Fast Fourier Transformation (FFT)
- Histogram
- Programming

© 2004 Microchip Technology Inc.

1.4.1 PCB Layout and Parts

Figure 1-1 shows the PCB layout of the Signal Analysis board. It is populated with a PIC16F684 and two 25LC640 serial EEPROM memory devices. The PIC16F684 I/O pins RC0, RC1 and RC3 are connected directly to test point connections on the edge of the PCB. These can be configured as comparator analog inputs (RC0/AN4, RC1/AN5), analog-to-digital converter inputs (RC0/AN4, RC1/AN5, RC3/AN7) or as digital input/output pins. I/O pin RC5 is connected through a RC filter (R1 and C4) to a test point connection. RC5 is the P1A output of the Enhanced Capture/Compare/Pulse Width Modulation (ECCP) module. It can be configured for digital PWM output. Additionally, +5V and ground test points are available as test point connections.

Two 25LC640 SPI™ compatible serial EEPROM memory devices provide 8-bit by 16K bytes of non-volatile memory. They are used in conjunction with the signal analysis firmware (PICA2Dlab.hex) program to store data at a specified sample rate. For non real-time acquisition modes (oscilloscope, FFT and histogram), the PC program downloads the data from the 25LC640's for computation and display.

Connector J1 allows additional circuit boards (for example temperature, light or pressure sensors) to be plugged into the Signal Analysis board for signal measurement and analysis. All port pins from the PIC16F684 are available on the J1 connector.

FIGURE 1-1: SIGNAL ANALYSIS PICtail™ DAUGHTER BOARD

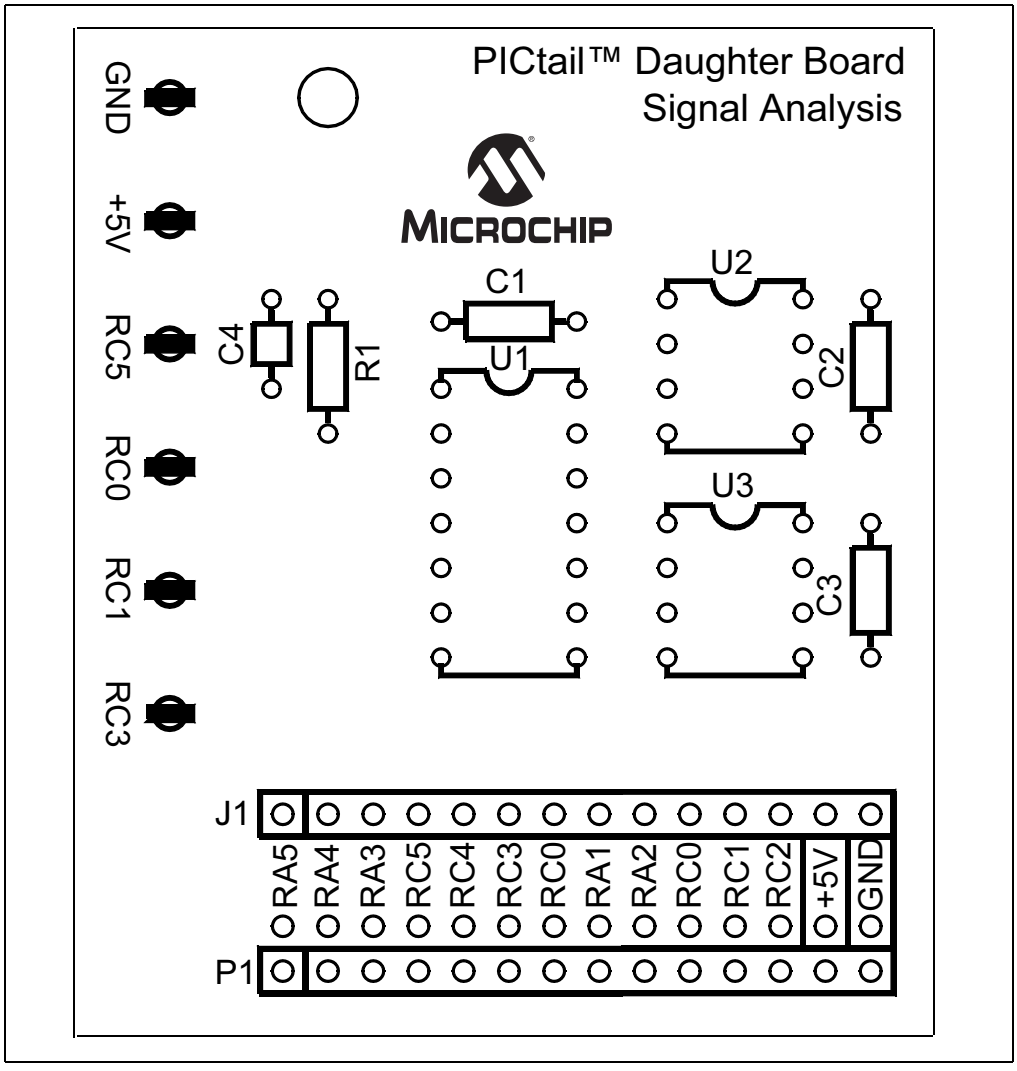

© 2004 Microchip Technology Inc.

1.4.2 Electrical Connections

Figure 1-2 shows how the Signal Analysis PICtail Daughter Board plugs into the PICkit 1 Flash Starter Kit expansion header J3. The Signal Analysis Board electrically detaches the PICkit 1 onboard LED array. The target PICmicro device is plugged into the Signal Analysis Board DIP socket U1. Remove any PICmicro devices from the Evaluation Socket on the PICkit 1 Flash Starter Kit.

Note: When the Signal Analysis PICtail Daughter Board is plugged into the PICkit 1 Flash Starter Kit, remove any PICmicro devices from the Evaluation Socket on the PICkit 1. The target PICmicro device used for evaluation and development is plugged into the DIP socket U1 on the Signal Analysis Daughter Board.

FIGURE 1-2: SIGNAL ANALYSIS PICtail™ DAUGHTER BOARD ORIENTATION

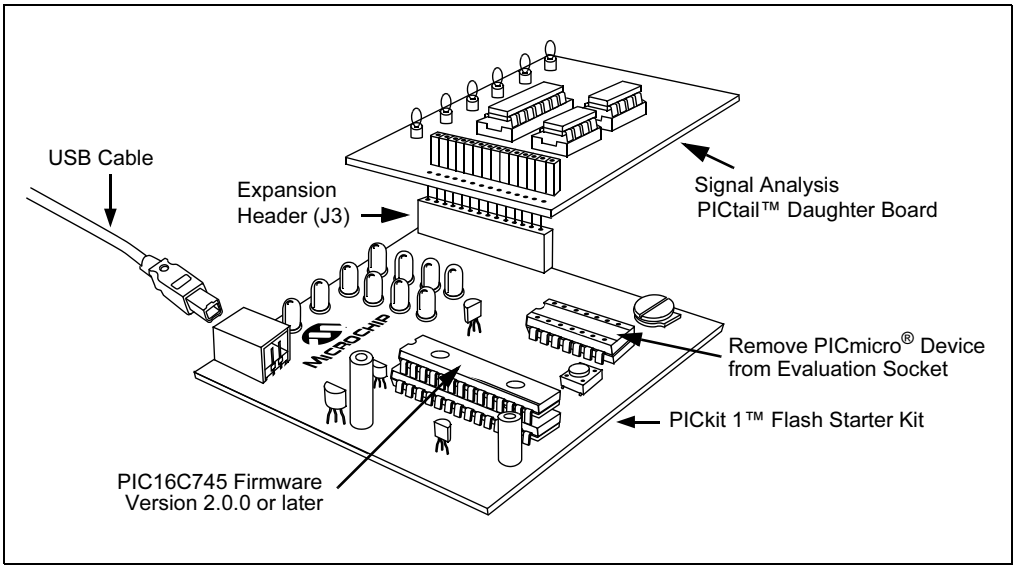

Figure 1-3 shows the electrical connections of the Signal Analysis PICtail Daughter Board with the PICkit 1 Flash Starter Kit. There are five connections: +5V, Ground, ICSPCLK, ICSPDAT and VPP (see Figure A-1 in **Appendix A. "Hardware Schematics"**). These signals allow the target PICmicro device, plugged into U1 DIP socket on the Signal Analysis PICtail Daughter Board, to be programmed and provide bidirectional synchronous serial communications with the PICkit 1 PIC16C745 microcontroller with USB device. With PICkit 1 V2.0.0 (or later) firmware, the user can communicate to and from the target PICmicro device via USB serial communications. This facilitates PC host programs to command, control and communicate with the target PICmicro device that is being evaluated or for program development.

FIGURE 1-3: SIGNAL ANALYSIS ELECTRICAL CONNECTION BLOCK DIAGRAM

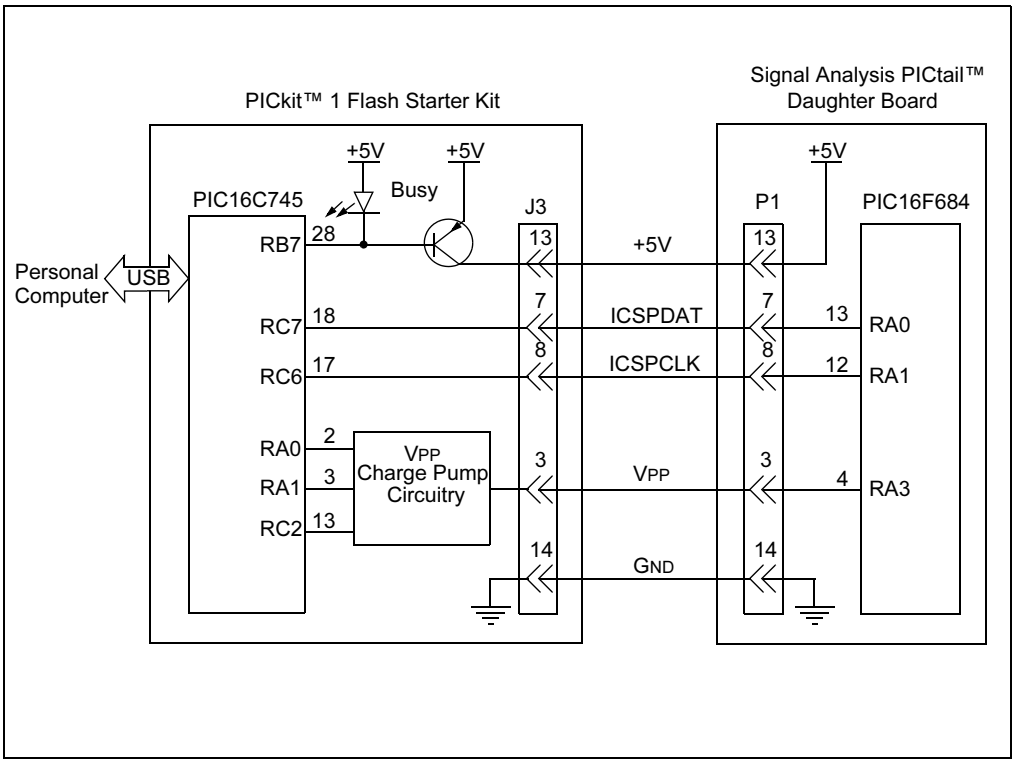

1.5 PIC16F684 FIRMWARE

This section provides a high-level discussion of the PIC16F684 firmware 'PICA2Dlab'. The source code for PICA2Dlab is contained on the PICkit 1 Flash Starter Kit CD-ROM. When programmed into the PIC16F684 on the Signal Analysis PICtail Daughter Board, PICA2Dlab recognizes commands from the PICkit 1 Flash Starter Kit PIC16C745 PICmicro device with USB. The PIC16C745 requires firmware version 2.0.0 or later for the signal analysis functions to work. PICA2Dlab communicates synchronously in both directions with the PIC16C745 microcontroller. Finally, the PICkit 1 Signal Analysis PC host program can command the PIC16F684 on the Signal Analysis PICtail Daughter Board.

1.5.1 PICA2Dlab Commands

Once programmed into the PIC16F684 microcontroller, the PICA2Dlab.hex firmware receives commands from the PC16C745. Presently it understands five commands:

1. **Version** – Returns a single byte representing a version number for the code. The host program on the PC may interrogate this to ensure the proper code is installed in the PIC16F684.
2. **Get Real-time Data** – Runs a conversion and returns the two byte result.
3. **Set Configuration** – Expects two bytes from the host. First byte represents the number of 256 byte blocks to acquire. Second byte represents the acquisition speed which is used as an index into a look-up table and sets up Timer0 for the acquisition period.
4. **Go** – Starts the acquisition process.
5. **Read** – Reads the data stored in the serial EEPROMs and sends it to the PC via the USB port.

© 2004 Microchip Technology Inc.

1.5.2 Real-time Mode

Real-time mode refers to the Signal Analysis Application mode that commands the PIC16F684 to perform one analog-to-digital (A/D) conversion from RC0/AN4 I/O port pin. The 10-bit conversion data is immediately sent to the PIC16C745 for transfer to the PC USB port. The Signal Analysis Application then displays the data in a real-time strip chart format.

1.5.3 Acquisition Mode

Acquisition mode refers to the Signal Analysis Application mode that commands the PIC16F684 to perform a specified number of A/D conversions at a specified speed (samples per second) and store the results in the serial EEPROMs.

The acquisition process is controlled by Timer0. The configuration command looks up precalculated Timer0 prescaler and Timer0 values. This ensures Timer0 will generate an interrupt on time as specified by the speed configuration parameter. When Timer0 overflows, the interrupt is triggered and initiates an analog-to-digital conversion and restarts Timer0.

Writing to a serial EEPROM consists of writing to a page of memory (32 bytes for the 25LC640) and initiating a Write cycle. A write cycle can take a maximum of 5 ms (3 ms typical) to complete. Thus, in order to store A/D conversions at high speeds, two serial EEPROMs are used. The data conversions are stored in the two serial EEPROMS by alternating (interleaving) between the two devices.

Figure 1-4 graphically illustrates the Acquisition mode data flow.

FIGURE 1-4: PICA2DLAB ACQUISITION MODE DATA FLOW DIAGRAM

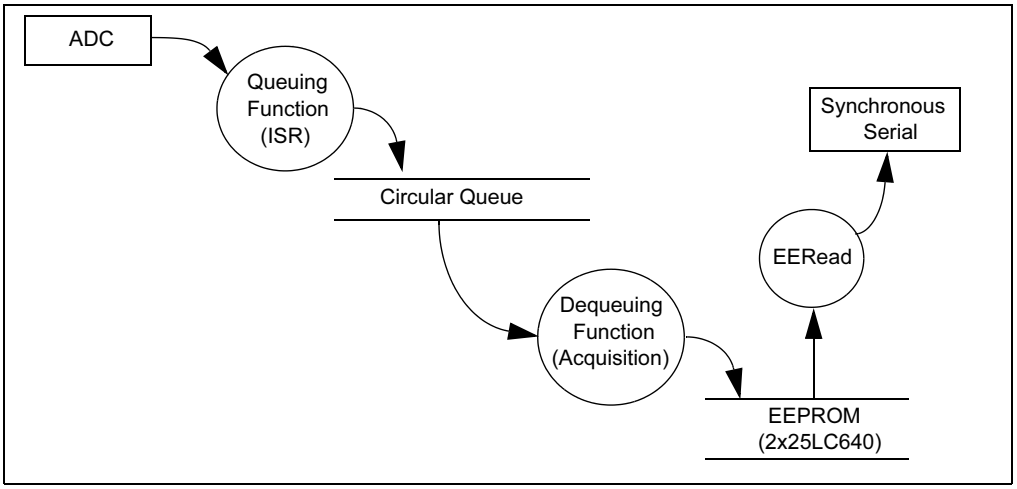

Note: The Signal Analysis PICtail Daughter Board is designed as a development tool rather than laboratory quality equipment. To reduce product costs, a number of design choices have been made in favor of lower cost over increased accuracy. These choices may affect the accuracy and repeatability of measurements. These potential sources of error include:

- The Analog-to-Digital Converter is referenced to V_{DD}, which is supplied by the USB cable. The PICkit 1 Signal Analysis PC Application assumes its 5.00V, however, the USB specifies only 4.75-5.25V.
- Timing of the samples (in Acquisition mode) is controlled by Timer0 and the internal oscillator on the PICmicro device. Check the *PIC16C745/765 8-Bit CMOS Microcontroller with the USB* data sheet (DS41124), for actual specifications on oscillator tolerances.

© 2004 Microchip Technology Inc.

NOTES:

© 2004 Microchip Technology Inc.

Chapter 2. Using the PICkit™ 1 Signal Analysis PC Application

2.1 INTRODUCTION

This chapter explains the operation of the PICkit 1 Signal Analysis PC Application. The Signal Analysis PICtail Daughter Board works as an extension to the PICkit 1 Flash Starter Kit. When combined with PICkit 1 V2.0.0 (or later) firmware and the PICkit 1 Signal Analysis PC Application, the Signal Analysis PICtail Daughter Board can perform signal analysis capabilities such as:

- Real-time Strip Chart
- Oscilloscope
- Fast Fourier Transformation (FFT)
- Histogram
- Programming

2.2 HIGHLIGHTS

This chapter discusses:

- Programming PICA2Dlab into the PIC16F684
- Selecting the mode
- Oscilloscope Plot
- FFT (Fast Fourier Transform)
- Histogram

2.3 PROGRAMMING PICA2DLAB INTO THE PIC16F684

1. Attach the Signal Analysis PICtail Daughter Board to the PICkit 1 Flash Starter Kit as shown in Figure 2-1.

FIGURE 2-1: SIGNAL ANALYSIS PICtail™ DAUGHTER BOARD

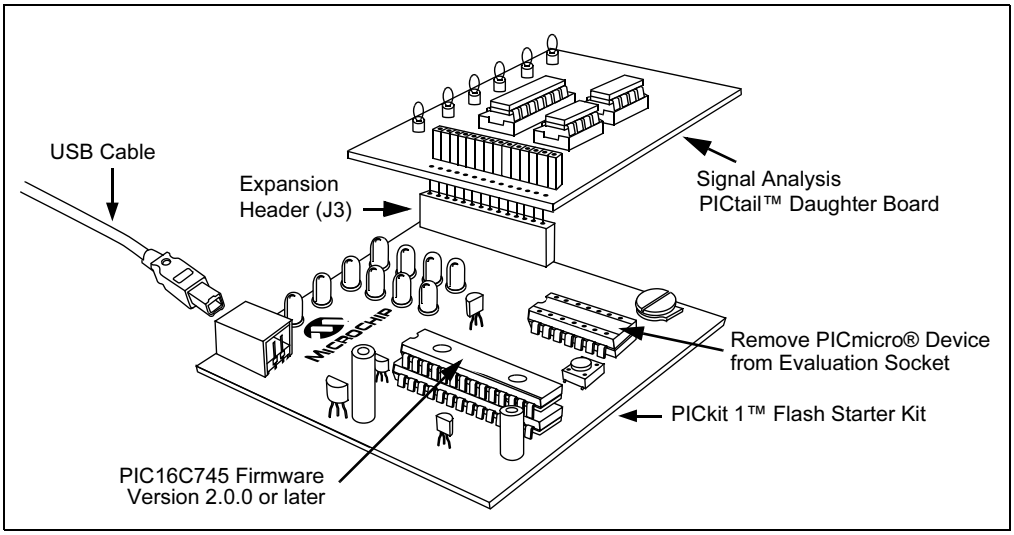

2. Connect the PICkit 1 Flash Starter Kit to a PC using a USB cable.
3. Execute the PICkit 1 Signal Analysis PC application.

FIGURE 2-2: PICkit™ 1 SIGNAL ANALYSIS PC APPLICATION INTERFACE WINDOW

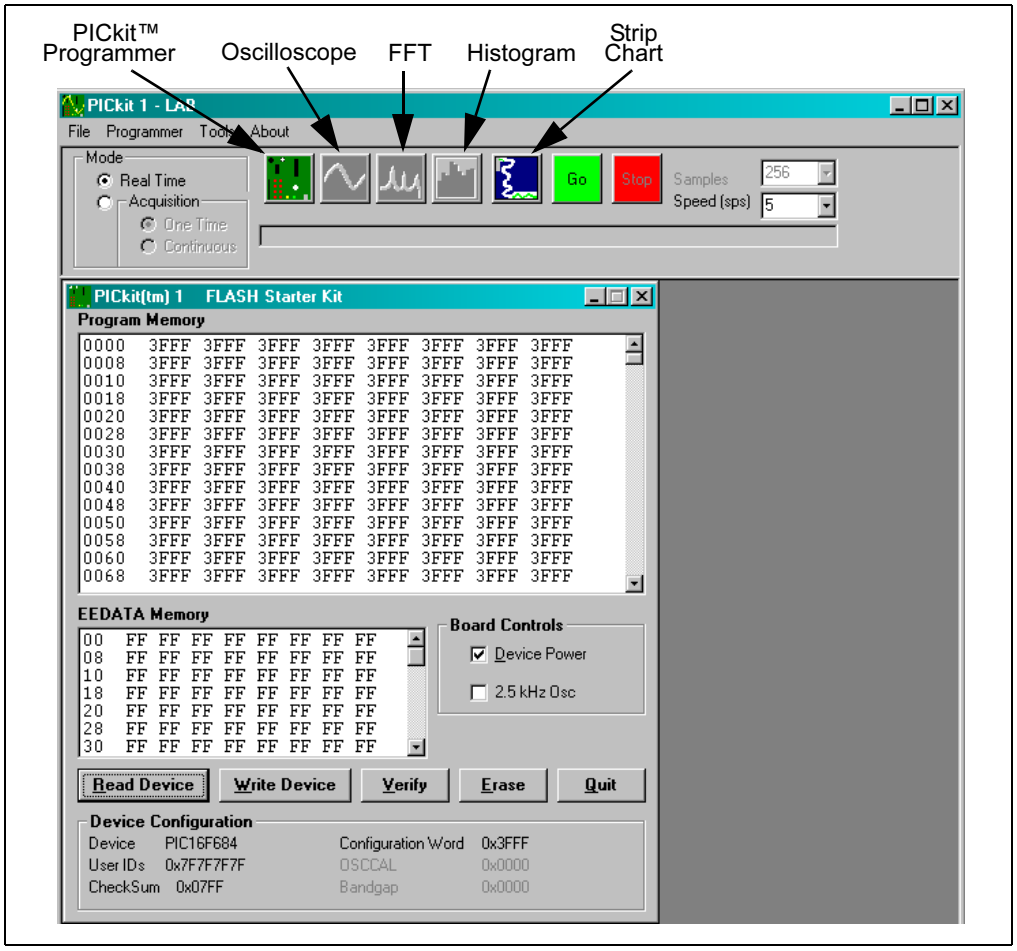

4. Click the PICkit Programmer icon.
5. Open *File > Import HEX* from the menu tool bar and select the "PICA2Dlab.hex" file.

FIGURE 2-3: IMPORT HEX FILE

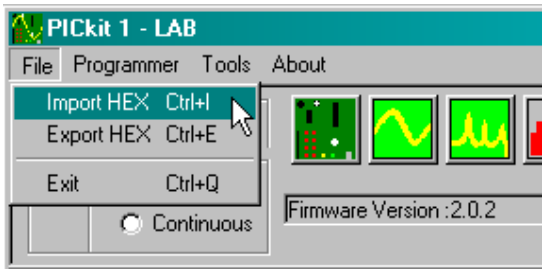

6. Program the PIC16F684 by selecting the **Write Device** button.
7. Apply the signal under test to pin RC0. The signal voltage level should be between 0V and +5V.

© 2004 Microchip Technology Inc.

2.4 MODE SELECTION

The Mode selection determines how the Signal Analysis Application will perform analog-to-digital conversions (ADC) from the 10-bit ADC in the PIC16F684 and how they will be displayed. There are two mode selections; Real Time and Acquisition, as shown in Figure 2-4.

FIGURE 2-4: MODE SELECTION

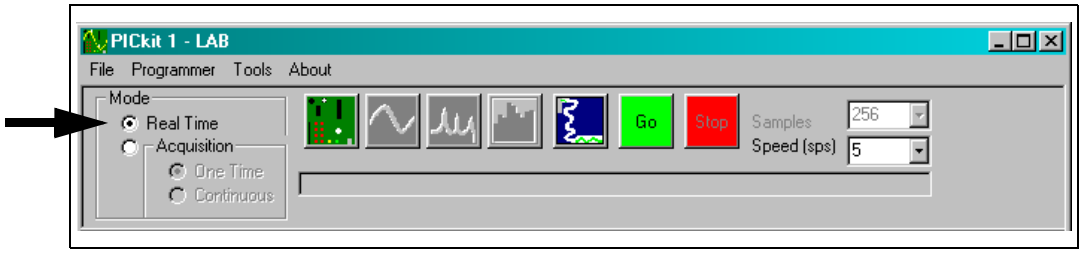

In Real-time mode, data conversions are performed immediately and transmitted to the PC. The data is displayed on a real-time strip chart.

In Acquisition mode, the data is stored in the serial EEPROMs. After the acquisition sequence, the data is uploaded to the PC for post processing.

2.4.1 Real-time Mode

Real-time mode performs an ADC on the RC0/AN4 I/O port pin and immediately transmits the data for display on the PC. The display option for this mode is the Strip Chart function. The **Speed (sps)** drop-down menu controls the relative conversion speed.

To use the Strip Chart function, click on the **Strip Chart** button. The Strip Chart window is displayed, as shown in Figure 2-5. To start the conversion process, click **Go**. Use the **Speed (sps)** drop-down menu (Figure 2-9) to control the sample speed.

FIGURE 2-5: STRIP CHART

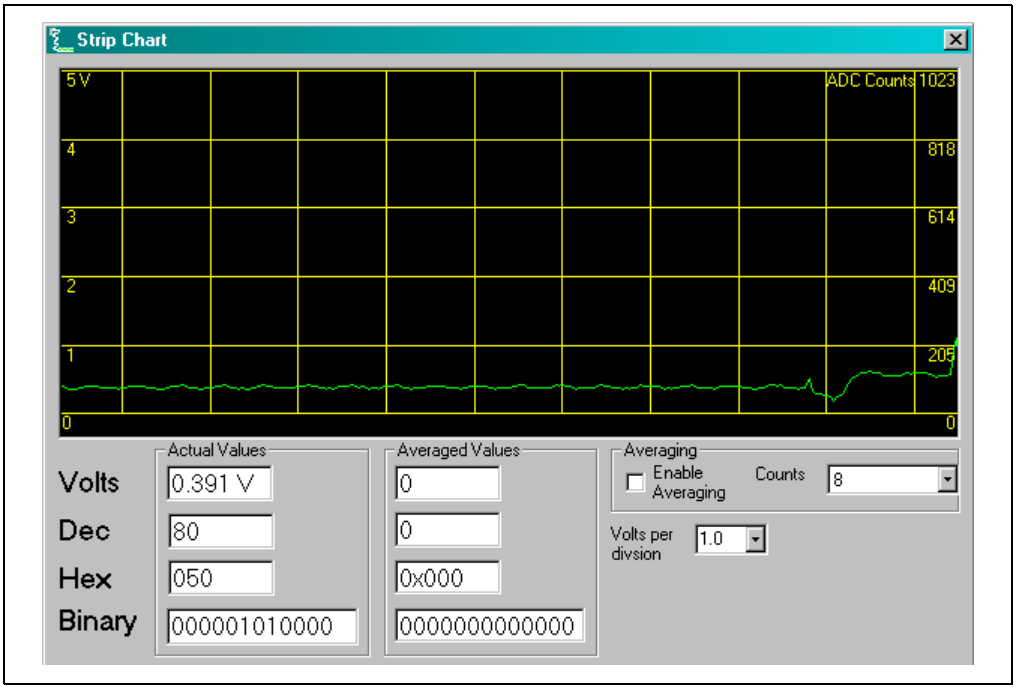

2.4.1.1 REAL-TIME NUMERIC VALUES

The Real-time numeric values are displayed at the bottom of the Strip Chart window. These values show the results of the conversion as it is transmitted from the ADC (Figure 2-6). The value is displayed in Volts, Decimal, Hex and Binary formats. The display updates each time a conversion is completed.

FIGURE 2-6: REAL-TIME VALUES

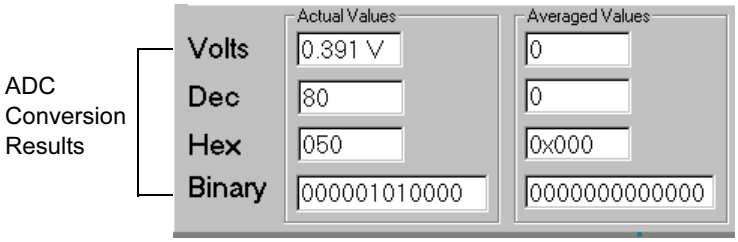

A second set of values provides the ability to observe the effects of averaging (Figure 2-7). When Averaging is selected, the Rolling Average mode is enabled. The display is updated after every conversion based on the average of the last *n* conversions where *n* = counts.

To enable averaging for each conversion, click the **Enable Averaging** check box. Use the **Counts** drop-down menu to control the counts.

FIGURE 2-7: AVERAGING

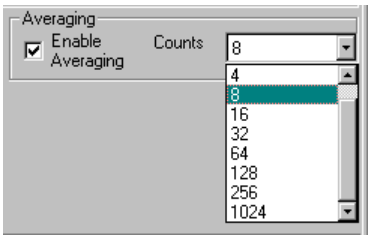

To change the volts per division in the Strip Chart window, use the **Volts per Division** drop-down menu and select the volts (Figure 2-8).

FIGURE 2-8: VOLTS PER DIVISION

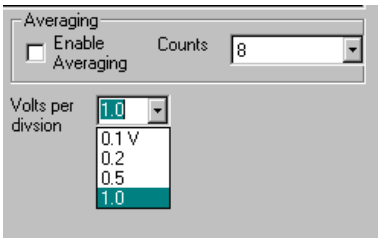

2.4.2 Acquisition Mode

Acquisition mode performs an ADC on the RC0/AN4 I/O port pin and temporarily stores the data from each conversion in the serial EEPROMs on the Signal Analysis PICtail Daughter Board. When all conversions are complete, the data is uploaded to the PC for display and analysis. Display options for this mode are the Oscilloscope, Histogram and FFT.

© 2004 Microchip Technology Inc.

2.4.3 Sample Size

FFT accuracy increases with sample size. However, large sample sizes take longer to upload to the PC.

To select different program memory space samples and sample speeds, use the **Samples** and **Speed (sps)** drop-down menus shown in Figure 2-9.

FIGURE 2-9: SAMPLES AND SPEED SELECTION

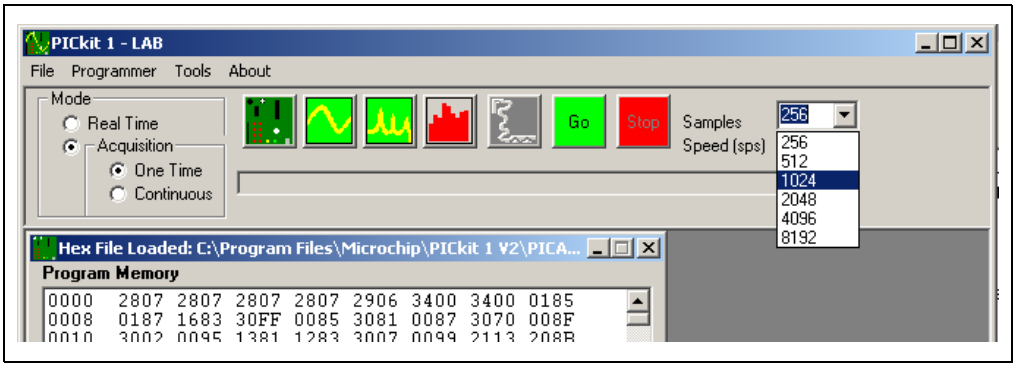

2.5 OSCILLOSCOPE PLOT

The Oscilloscope Plot shows the results of a conversion with respect to time. This plot shows time on the X-Axis and voltage on the Y-Axis.

Click the **Oscilloscope** button (Figure 2-2) then Click **Go** to acquire and display the results according to the sample size and speed selected in the drop down boxes.

FIGURE 2-10: OSCILLOSCOPE PLOT DISPLAY WINDOW

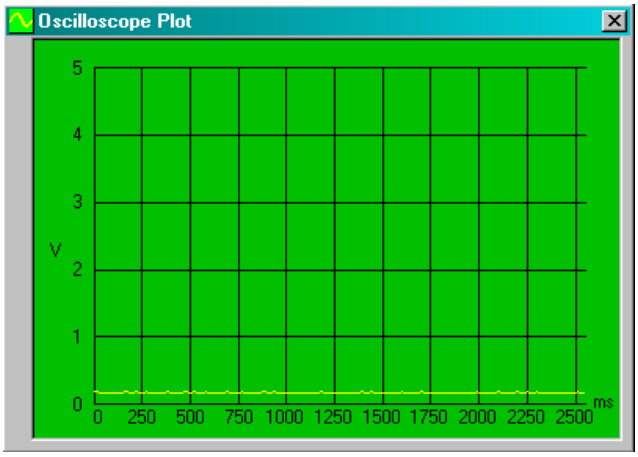

2.6 FFT (FAST FOURIER TRANSFORM)

The FFT displays the Fast Fourier Transformation of the data in the frequency domain. This display is typically used to analyze AC signals or to help locate the source of AC noise.

FIGURE 2-11: FFT DISPLAY

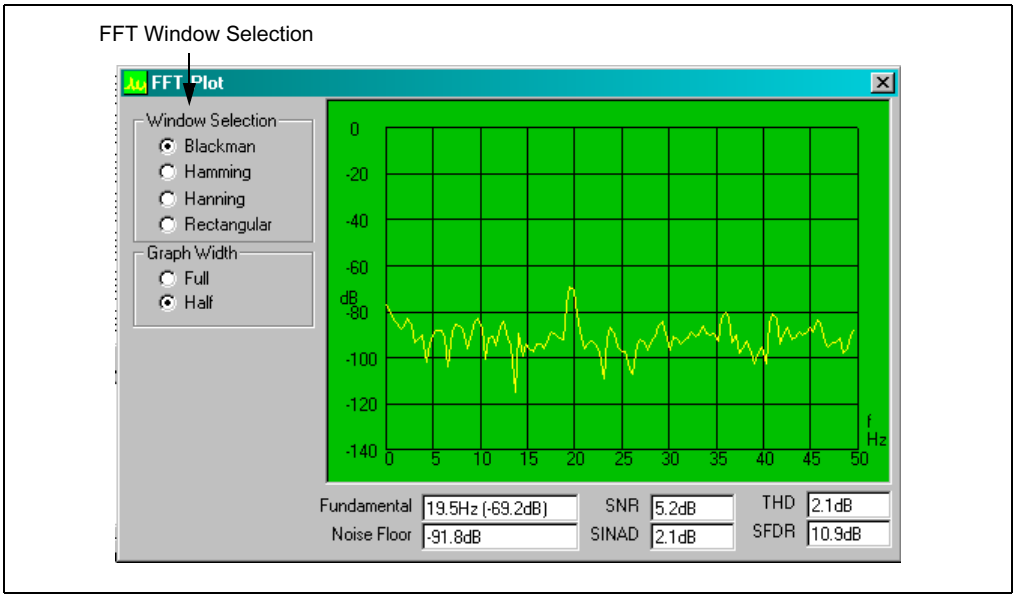

The size of the data set of the FFT analysis determines the resolution and accuracy of the FFT. The accuracy is equal to:

$$\text{FFT Accuracy} = (4/(n\sqrt{N})dB)$$

Where:

n = number of converted bits
N = number of data points

In instances where the input signal is not periodic with respect to the sampling frequency of the converter (as is the case with this tool), windowing algorithms are advantageous when looking at FFT results. The windows that are available with the Signal Analysis Application are the Blackman, Hamming, Hanning and Rectangular. Basically, an FFT window is multiplied times the measured signal data set taken during the specified length of time of the conversion. Typically this multiple reduces the magnitude of the beginning and end of the sample and consequently minimizing discontinuities seen with the FFT calculation.

Blackman – Window has a bell-shaped characteristic similar to the Blackman-Harris window. The peak resolution of this window is not as fine as the Hanning, but the responses flares out less and the rejection of the sidelobes is better.

Hamming – Window has a bell-shaped characteristic. The initial samples from the conversion data are multiplied by a small number as are the last samples. With this window, the side lobes adjacent to the main lobes are lower than the results from the Hanning Window.

Hanning – Window has a bell-shaped characteristic. The initial samples are multiplied by zero as well a the latest samples. The samples between the beginning and end are multiplied with the Hanning bell-shape curve. The side lobes of this window are farther from main lobe as compared to the Hanning Windows. This window is typically used for harmonic analysis of continuous time signals as well as random noise.

© 2004 Microchip Technology Inc.

Rectangular – Window is a rectangular shaped window. Every point of the time scale is multiplied by a constant. This window provides the best frequency resolution with the narrowest lobe width. Amplitude accuracy errors occur if frequency of observed signal has a non-integer number of cycles in the FFT time record. Most typically, this window is best used when viewing transients, impulses, pseudo-random noise and when the input signal is correlated with the sampling frequency.

When the FFT windows are implemented there is a certain amount of energy that is spread across adjacent frequency bins. This spreading is a result of converting non-coherent signals and the particular window. Consequently, there is not a direct correlation between the amplitude of the analog input signal to the A/D converter and the height of the spur in the FFT analysis.

2.6.1 Glossary of Terms

Fundamental Frequency – The lowest frequency component in the Fourier representation of a periodic quantity.

Noise Floor – The noise level at a referenced location and bandwidth.

SNR (Signal-to-Noise Ratio) – The ratio of relative power of the usable signal to the noise present, expressed in decibels.

SINAD (Signal to (Noise + Distortion) Ratio) – S/(N+D) is the ratio of the rms value of the actual input signal to the rms sum of all other spectral components or harmonics below the Nyquist frequency, excluding DC. This software includes nine harmonics in the calculation. Decibels is the unit of measure for S/(N+D).

THD (Total Harmonic Distortion) – The ratio in dB of the energy of a fundamental test frequency to the energy of its harmonics appearing in the band of interest.

SFDR (Spurious Free Dynamic Range) – The difference in decibels between the input signal and the next largest harmonic.

© 2004 Microchip Technology Inc.

2.7 HISTOGRAM

The Histogram allows the user to observe the data taken from a conversion and determine the relative variation of the digital codes. The histogram plot shows the digital codes on the X-Axis and the number of occurrences for each code on the Y-Axis. The statical values of the data set are shown at the bottom of the window. The Span Control locks in the number of codes shown on the X-Axis or allows the program to automatically scale the axis for every conversion.

FIGURE 2-12: HISTOGRAM WINDOW

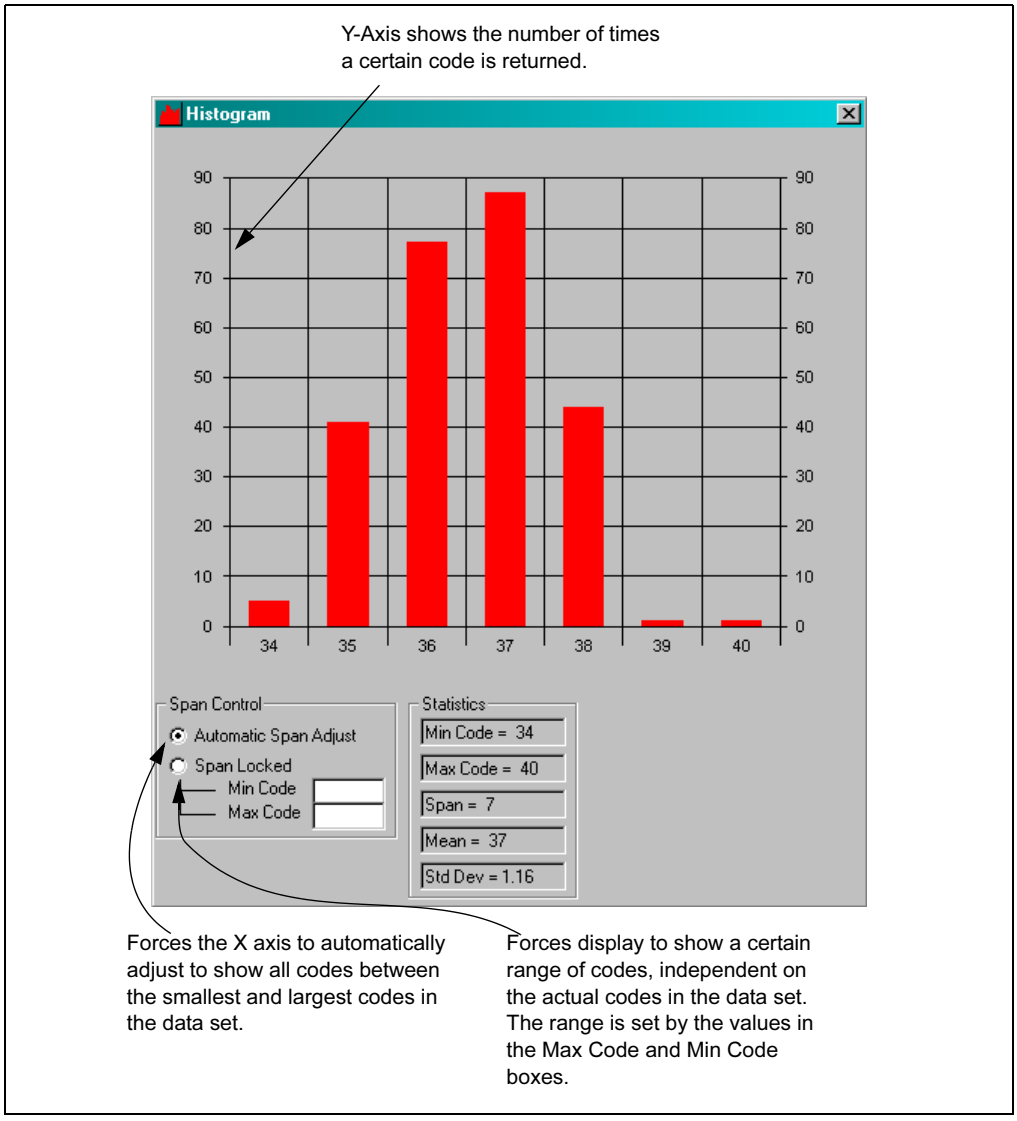

© 2004 Microchip Technology Inc.

Chapter 3. Lesson Projects

3.1 INTRODUCTION

The Signal Analysis PICtail Daughter Board can capture a variety of DC and AC signals from the RC0/AN4 I/O port pin of the PIC16F684 using the internal 10-bit ADC. Ensure that the applied signal does not exceed 5V peak-to-peak. If the signal is DC, ensure that the voltage levels do not fall below 0V or exceed +5V. If the signal is AC, DC decouple the signal using a decoupling capacitor and ensure that the signal level does not exceed the DC limits stated above. Lesson 1 demonstrates how a DC signal can be displayed from a thermistor. Lesson 2 demonstrates how an AC signal can be displayed from a photodiode.

In addition to capturing analog signals, the Signal Analysis PICtail Daughter Board can generate low frequency sine waves from Pulse Width Modulated (PWM) signal from the ECCP module. I/O port pin RC5 is connected to a low-pass RC filter (R1 and C4) and made available as a test point on the edge of the PCB. Lesson 3 demonstrates how a 125 Hz sine wave can be generated.

3.2 HIGHLIGHTS

The following lessons are discussed in this chapter:

- Lesson 1 – Thermistor
- Lesson 2 – Photodiode
- Lesson 3 – Pulse Width Modulated Generated Sine Wave

3.3 LESSON 1 – THERMISTOR

A thermistor is a resistor that changes resistance in response to temperature changes. Some have a positive temperature coefficient where the resistance increases with temperature and others have a negative coefficient. For temperature measurement purposes, the Negative Temperature Coefficient (NTC) versions are more linear.

The simplest configuration is shown in Figure 3-1. It is a resistor divider network where the thermistor and a second resistor are connected in series between ground and a voltage reference. The voltage between the resistors varies with the temperature and can be measured via an A2D Converter. Also, this configuration has the added benefit that voltage increases with temperature.

The voltage at the center is given by ADC counts = 1024 * R/(R+Rt). In this example, the thermistor specified for 10 kΩ at 25C. The bottom resistor is chosen to be 3.3 kΩ. That means 254 ADC counts correlates to 25C. Since the ADC is referenced to 5V (nominal) 254 counts * 5/1024 = 1.241V.

Start the PICkit 1 Signal Analysis PC Application. Select the **Real Time** button, click on the **Strip Chart** icon, and then click **Go**. By changing the temperature of the thermistor, the response can be observed in real-time on the strip chart display. An example screen capture is shown in Figure 3-2.

For more information about thermistors, see Microchip Application Notes AN685, AN689, AN867 and AN897, available on the PICkit 1 CD-ROM and on the Microchip web site: www.microchip.com.

© 2004 Microchip Technology Inc.

FIGURE 3-1: THERMISTOR SCHEMATIC

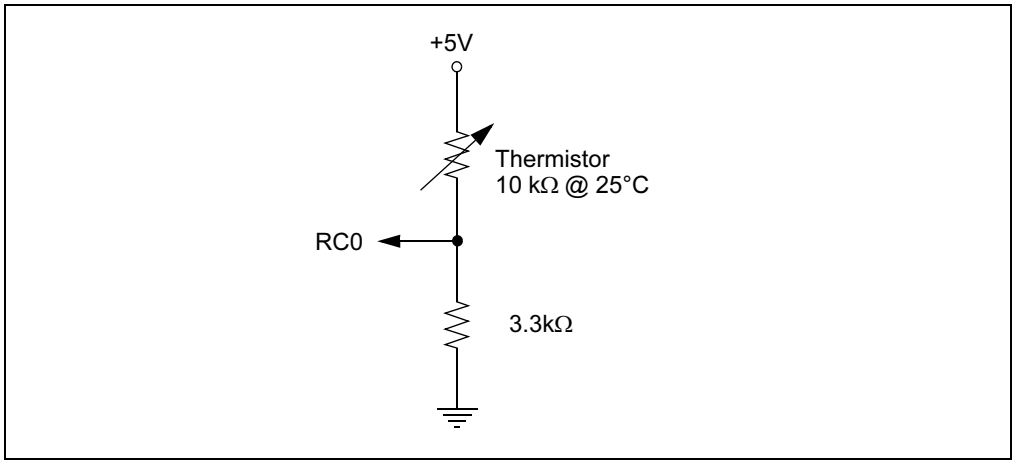

FIGURE 3-2: THERMISTOR STRIP CHART DISPLAY

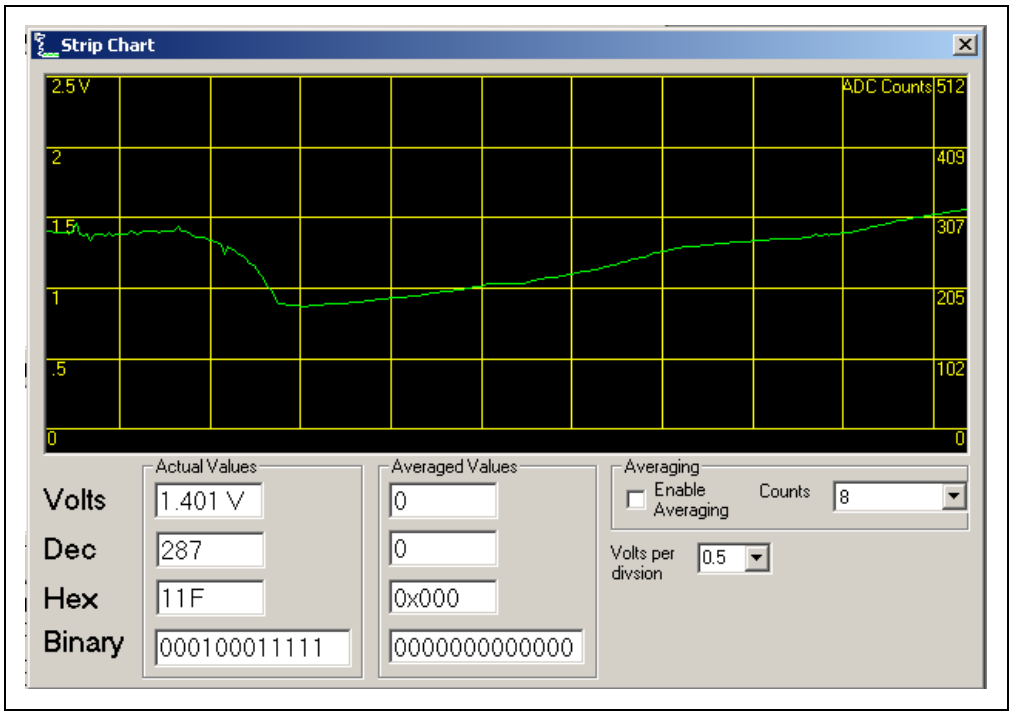

© 2004 Microchip Technology Inc.

3.4 LESSON 2 – PHOTODIODE

A simple photodiode circuit can be constructed from the schematic shown in Figure 3-3. D_1 is a Panasonic PNZ334 PIN photodiode. U_1 is Microchip Technology MCP6001U op amp. R_1 was chosen to be 64.9 kΩ so that $V_{OUT} \approx 4.5V$ at the maximum Is, and $V_{OUT} \approx 0V$ at the minimum Is. C_3 is a 0.1 μF capacitor for good supply bypass performance. R_2 and C_2 form a low-pass filter for noise performance. Since the maximum sample rate of the Signal Analysis PICtail Daughter Board is 5000 samples per second (sps), the low-pass pole is set near 500 Hz.

$R_2 = 10.0\ k\Omega$

$C_2 \approx 1/(2\pi(500\ Hz)(10.0\ k\Omega)) = 32\ nF$

The nearest standard value of 33 nF, giving

$f_{RnCn} = 1/(2\pi(10.0\ k\Omega)(33\ nF)) = 482\ kHz$

Table 3-1 summarizes the final design values of the components in Figure 3-3. Figure 3-4 through Figure 3-6 show screen captures from data acquisitions from the photodiode placed 30 cm under a fluorescent desk lamp. The sample size was 1024 and the sample speed was set at 1000.

FIGURE 3-3: PHOTODIODE PICtail™ SCHEMATIC DIAGRAM

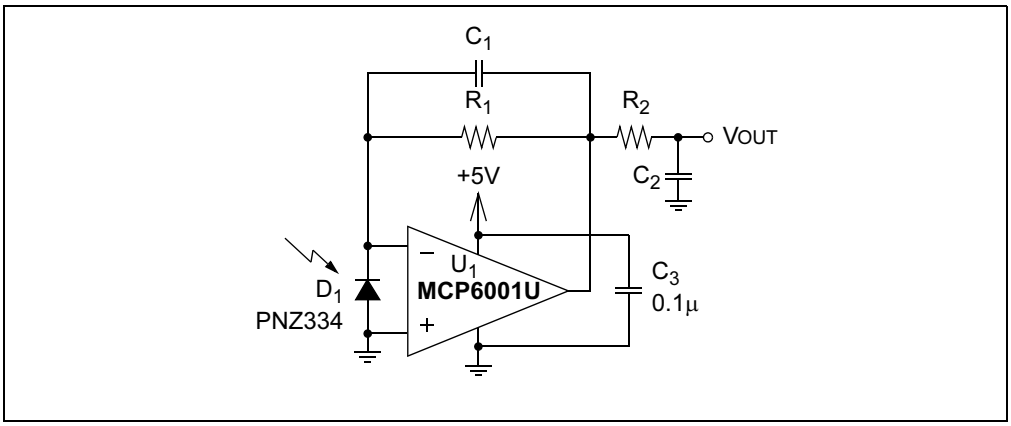

TABLE 3-1: PHOTODIODE PICtail™ COMPONENTS

Component	Value/Part No.	Size/Package
C_1	18 pF	SMD 0805
C_2	33 nF	SMD 0805
C_3	0.1 μF	SMD 0805
D_1	PNZ334 Panasonic	Plastic Through-hole, 100 mil pitch
R_1	64.9 kΩ, 1%	SMD 0805
R_2	10.0 kΩ	SMD 0805
U_1	MCP6001U	SOT-23-5

© 2004 Microchip Technology Inc.

FIGURE 3-4: PHOTODIODE OSCILLOSCOPE SCREEN CAPTURE

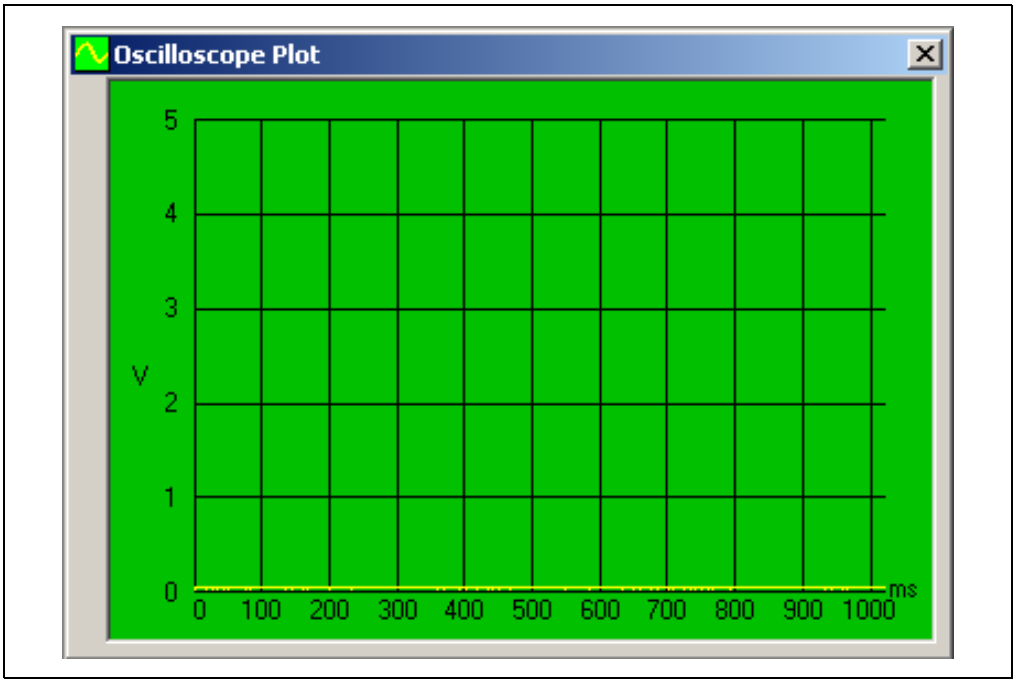

FIGURE 3-5: PHOTODIODE FFT SCREEN CAPTURE

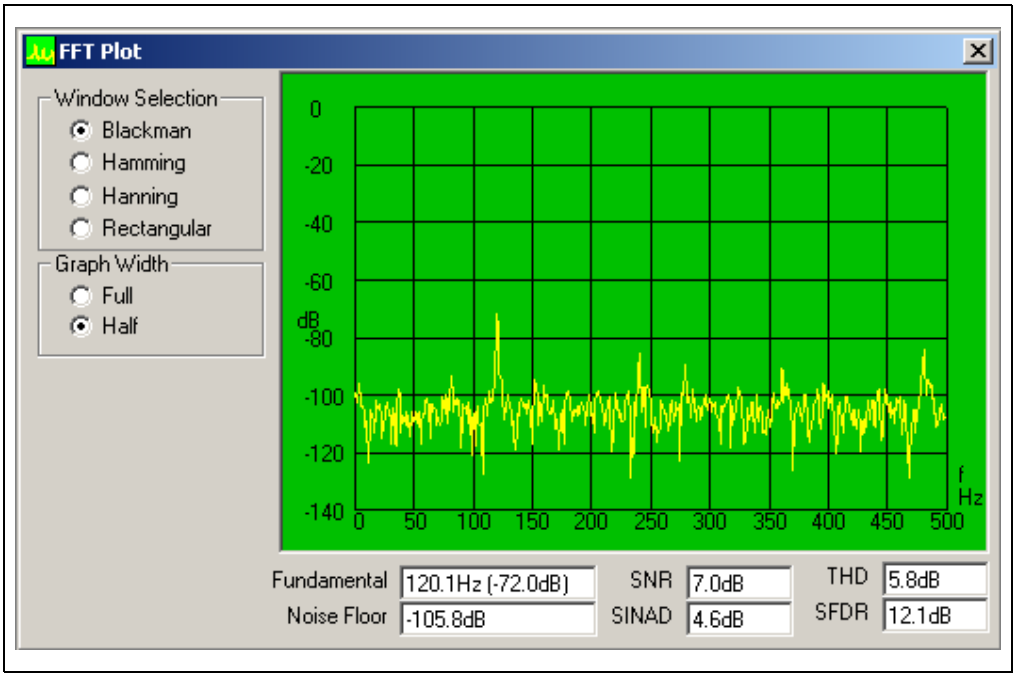

© 2004 Microchip Technology Inc.

FIGURE 3-6: PHOTODIODE HISTOGRAM SCREEN CAPTURE

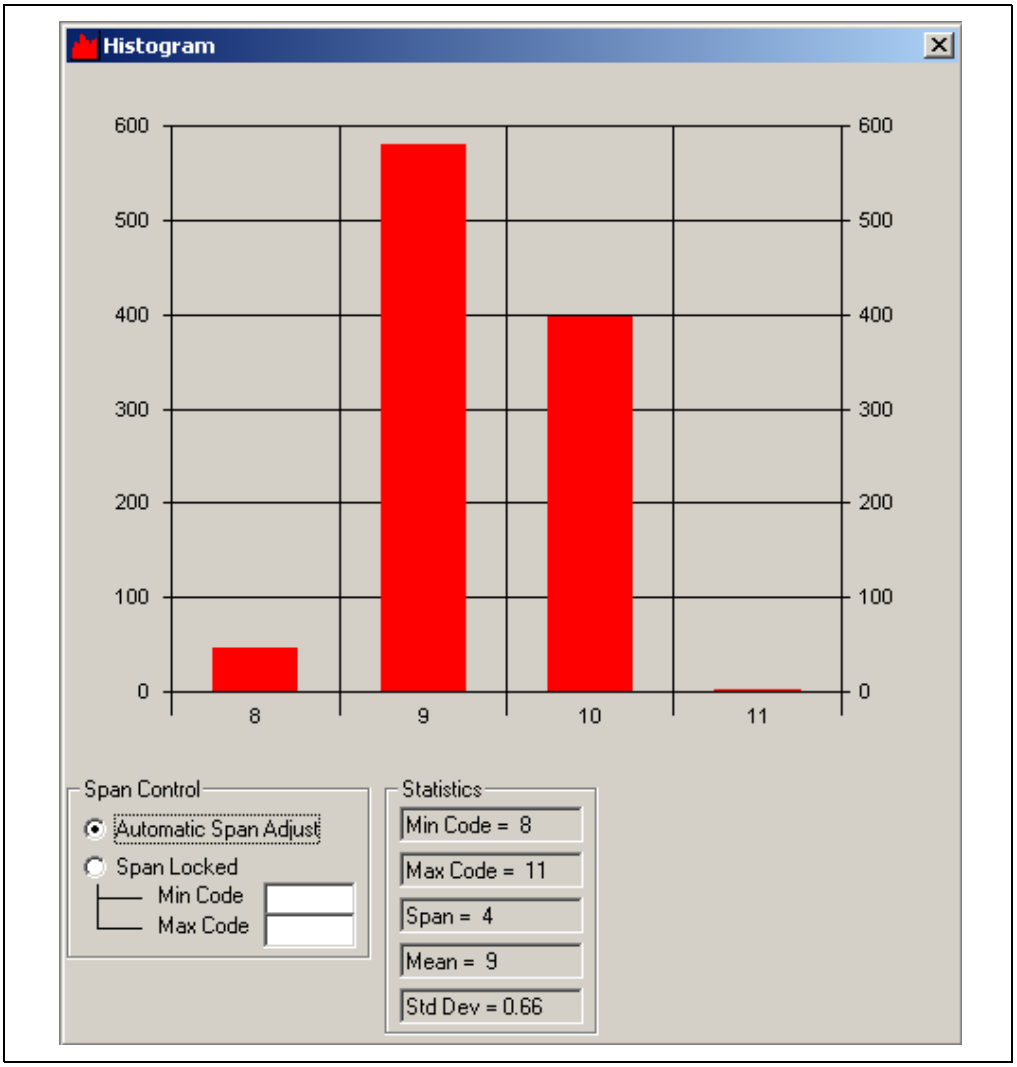

3.5 LESSON 3 – PULSE WIDTH MODULATED GENERATED SINE WAVE

A sine wave can be generated from a low-pass filtered Pulse Width Modulated (PWM) signal. The duty cycle of the PWM signal is set to the magnitude of a sine wave at a prescribed sample rate. The sample rate sets the frequency of the sine wave. Figure 3-7 is an oscilloscope screen capture of the PWM signal. Persistence has been set on to capture the varying duty cycle. Figure 3-8 is the resulting sine wave after the PWM signal in Figure 3-7 has been low-pass filtered.

Source code and hex files are available on the CD-ROM.

FIGURE 3-7: MODULATED PWM SIGNAL (BEFORE FILTERING)

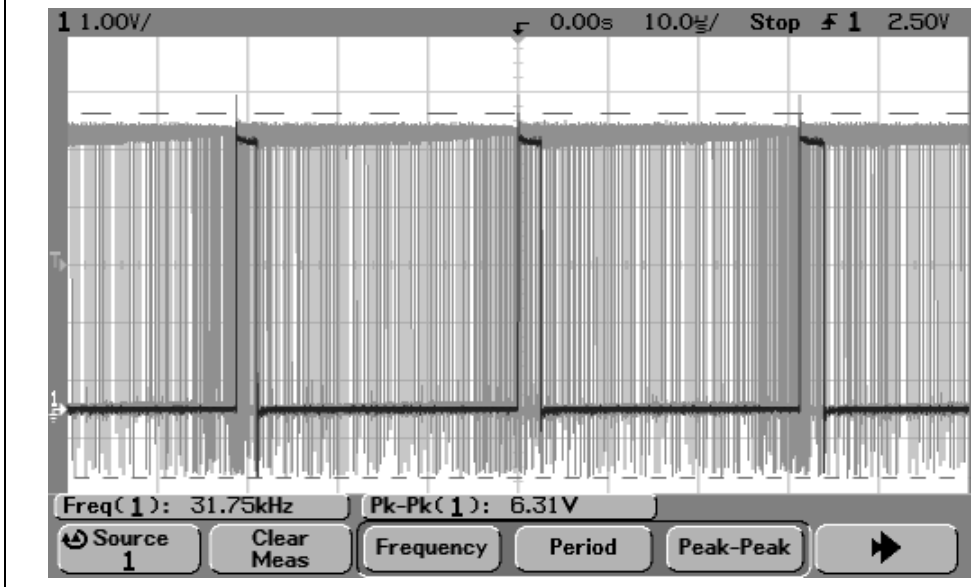

FIGURE 3-8: SINE WAVE (AFTER PWM FILTERING)

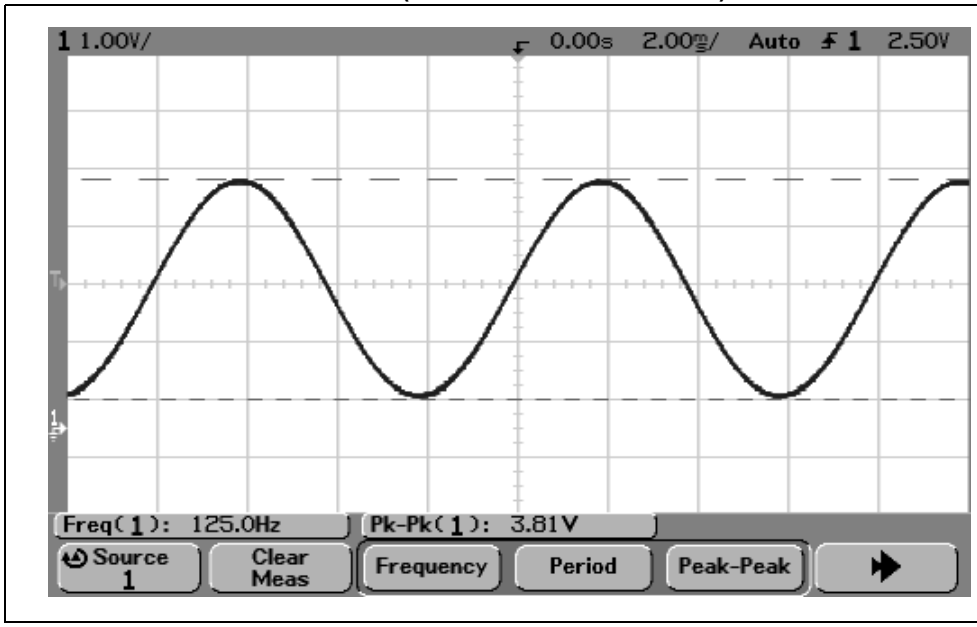

© 2004 Microchip Technology Inc.

Chapter 4. Troubleshooting

4.1 INTRODUCTION

This chapter describes common problems associated with using the Signal Analysis PICtail Daughter Board and steps on how to resolve them.

4.2 COMMON PROBLEMS

4.2.1 Programmer Not Found

The PICkit 1 Signal Analysis PC Application was not able to communicate with the PICkit 1 Flash Starter Kit. Check that the USB cable is connected to the PICkit 1 Flash Starter Kit and the PC.

FIGURE 4-1: PROGRAMMER NOT FOUND ERROR MESSAGE

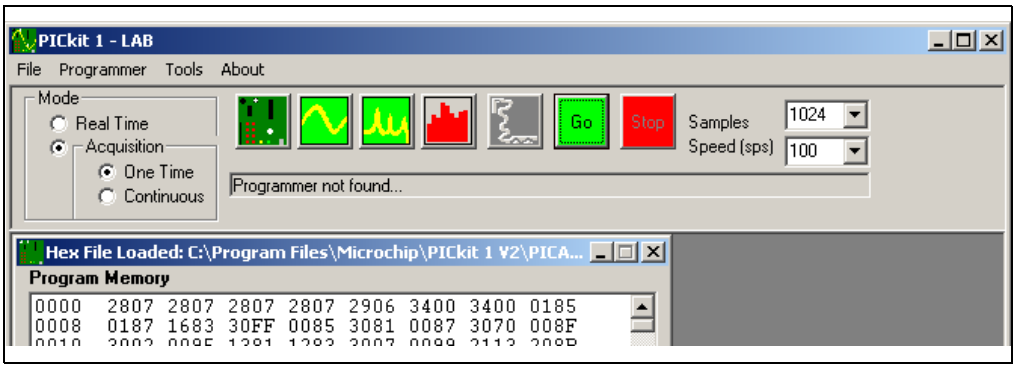

4.2.2 Insert Device

The PICkit 1 Signal Analysis PC Application was not able to communicate with the target PICmicro device. Check that the Signal Analysis PICtail Daughter Board is plugged into J3 of the PICkit 1 Flash Starter Kit. Check that a PICmicro device is plugged into socket U1 of the Signal Analysis PICtail Daughter Board. Check and make sure that the evaluation socket on the PICkit 1 board is empty.

FIGURE 4-2: INSERT DEVICE ERROR MESSAGE

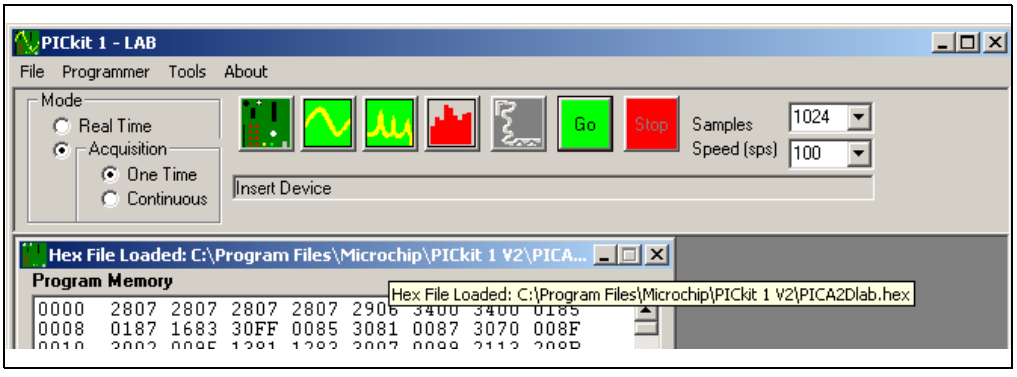

4.2.3 End Device Must Have Acquisition Firmware Loaded

The PICkit 1 Signal Analysis PC Application was not able to communicate with the firmware in the target PICmicro device on the Signal Analysis PICtail Daughter Board. Ensure that PICA2Dlab.hex has been programmed into the Signal Analysis PICtail Daughter Board.

FIGURE 4-3: END DEVICE ACQUISITION FIRMWARE LOADED ERROR MESSAGE

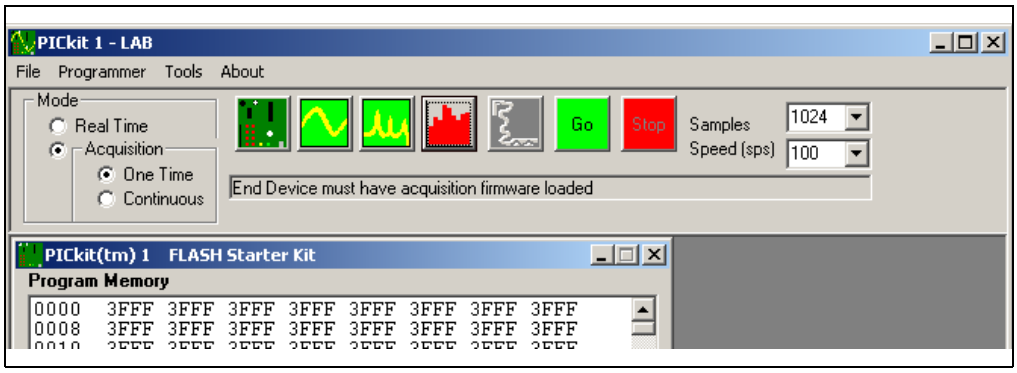

© 2004 Microchip Technology Inc.

Appendix A. Hardware Schematics

A.1 INTRODUCTION

This appendix contains the Signal Analysis PICtail Daughter Board Hardware Schematic Diagram.

FIGURE A-1: SIGNAL ANALYSIS PICtail™ DAUGHTER BOARD HARDWARE SCHEMATIC DIAGRAM

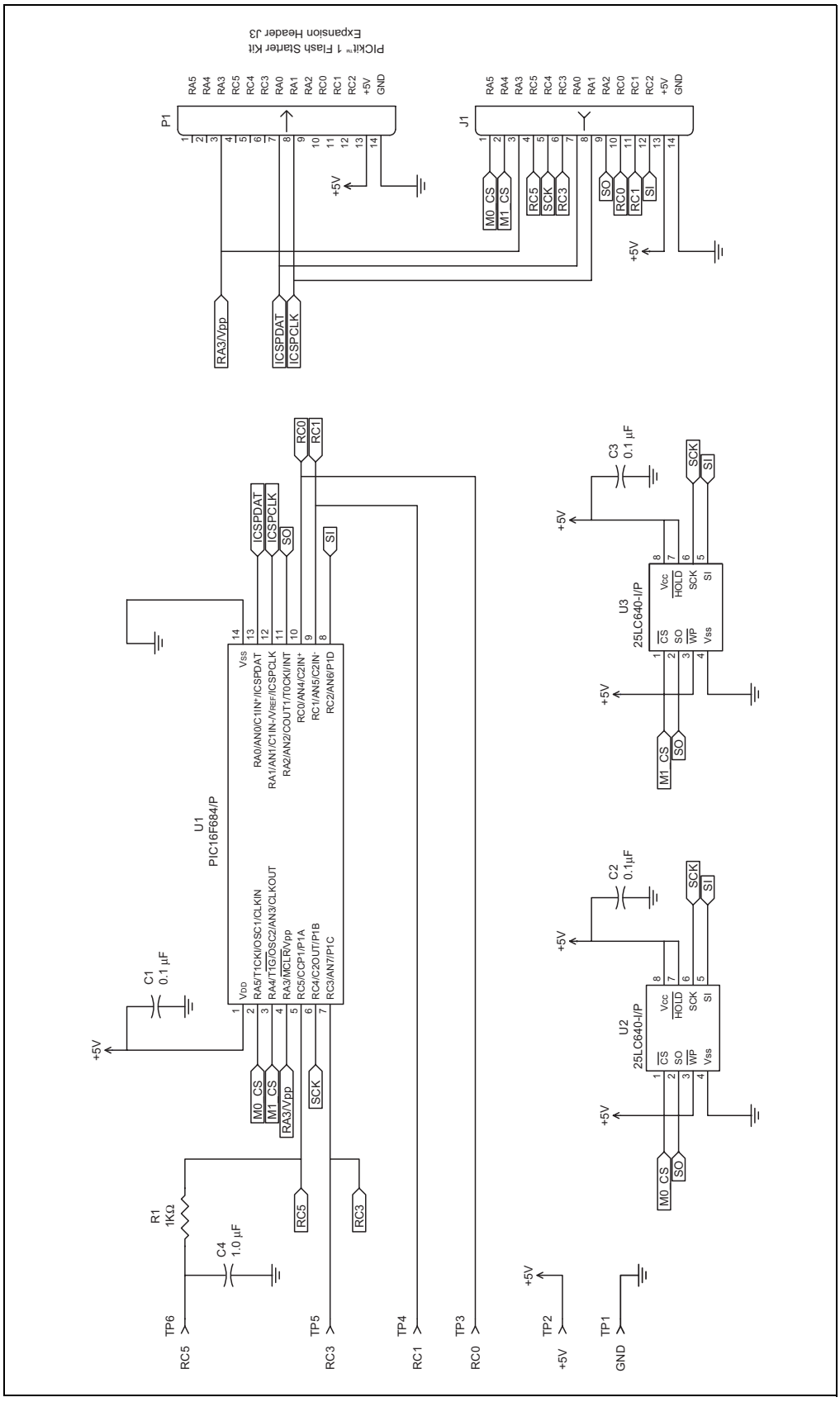

© 2004 Microchip Technology Inc.

NOTES:

WORLDWIDE SALES AND SERVICE

AMERICAS

Corporate Office
2355 West Chandler Blvd.
Chandler, AZ 85224-6199
Tel: 480-792-7200
Fax: 480-792-7277
Technical Support: 480-792-7627
Web Address: www.microchip.com

Atlanta
3780 Mansell Road, Suite 130
Alpharetta, GA 30022
Tel: 770-640-0034
Fax: 770-640-0307

Boston
2 Lan Drive, Suite 120
Westford, MA 01886
Tel: 978-692-3848
Fax: 978-692-3821

Chicago
333 Pierce Road, Suite 180
Itasca, IL 60143
Tel: 630-285-0071
Fax: 630-285-0075

Dallas
4570 Westgrove Drive, Suite 160
Addison, TX 75001
Tel: 972-818-7423
Fax: 972-818-2924

Detroit
Tri-Atria Office Building
32255 Northwestern Highway, Suite 190
Farmington Hills, MI 48334
Tel: 248-538-2250
Fax: 248-538-2260

Kokomo
2767 S. Albright Road
Kokomo, IN 46902
Tel: 765-864-8360
Fax: 765-864-8387

Los Angeles
18201 Von Karman, Suite 1090
Irvine, CA 92612
Tel: 949-263-1888
Fax: 949-263-1338

San Jose
1300 Terra Bella Avenue
Mountain View, CA 94043
Tel: 650-215-1444
Fax: 650-961-0286

Toronto
6285 Northam Drive, Suite 108
Mississauga, Ontario L4V 1X5, Canada
Tel: 905-673-0699
Fax: 905-673-6509

ASIA/PACIFIC

Australia
Suite 22, 41 Rawson Street
Epping 2121, NSW
Australia
Tel: 61-2-9868-6733
Fax: 61-2-9868-6755

China - Beijing
Unit 706B
Wan Tai Bei Hai Bldg.
No. 6 Chaoyangmen Bei Str.
Beijing, 100027, China
Tel: 86-10-85282100
Fax: 86-10-85282104

China - Chengdu
Rm. 2401-2402, 24th Floor,
Ming Xing Financial Tower
No. 88 TIDU Street
Chengdu 610016, China
Tel: 86-28-86766200
Fax: 86-28-86766599

China - Fuzhou
Unit 28F, World Trade Plaza
No. 71 Wusi Road
Fuzhou 350001, China
Tel: 86-591-7503506
Fax: 86-591-7503521

China - Hong Kong SAR
Unit 901-6, Tower 2, Metroplaza
223 Hing Fong Road
Kwai Fong, N.T., Hong Kong
Tel: 852-2401-1200
Fax: 852-2401-3431

China - Shanghai
Room 701, Bldg. B
Far East International Plaza
No. 317 Xian Xia Road
Shanghai, 200051
Tel: 86-21-6275-5700
Fax: 86-21-6275-5060

China - Shenzhen
Rm. 1812, 18/F, Building A, United Plaza
No. 5022 Binhe Road, Futian District
Shenzhen 518033, China
Tel: 86-755-82901380
Fax: 86-755-8295-1393

China - Shunde
Room 401, Hongjian Building, No. 2
Fengxiangnan Road, Ronggui Town, Shunde
District, Foshan City, Guangdong 528303, China
Tel: 86-757-28395507 Fax: 86-757-28395571

China - Qingdao
Rm. B505A, Fullhope Plaza,
No. 12 Hong Kong Central Rd.
Qingdao 266071, China
Tel: 86-532-5027355 Fax: 86-532-5027205

India
Divyasree Chambers
1 Floor, Wing A (A3/A4)
No. 11, O'Shaugnessey Road
Bangalore, 560 025, India
Tel: 91-80-22290061 Fax: 91-80-22290062

Japan
Benex S-1 6F
3-18-20, Shinyokohama
Kohoku-Ku, Yokohama-shi
Kanagawa, 222-0033, Japan
Tel: 81-45-471- 6166 Fax: 81-45-471-6122

Korea
168-1, Youngbo Bldg. 3 Floor
Samsung-Dong, Kangnam-Ku
Seoul, Korea 135-882
Tel: 82-2-554-7200 Fax: 82-2-558-5932 or
82-2-558-5934

Singapore
200 Middle Road
#07-02 Prime Centre
Singapore, 188980
Tel: 65-6334-8870 Fax: 65-6334-8850

Taiwan
Kaohsiung Branch
30F - 1 No. 8
Min Chuan 2nd Road
Kaohsiung 806, Taiwan
Tel: 886-7-536-4818
Fax: 886-7-536-4803

Taiwan
Taiwan Branch
11F-3, No. 207
Tung Hua North Road
Taipei, 105, Taiwan
Tel: 886-2-2717-7175 Fax: 886-2-2545-0139

EUROPE

Austria
Durisolstrasse 2
A-4600 Wels
Austria
Tel: 43-7242-2244-399
Fax: 43-7242-2244-393

Denmark
Regus Business Centre
Lautrup hoj 1-3
Ballerup DK-2750 Denmark
Tel: 45-4420-9895 Fax: 45-4420-9910

France
Parc d'Activite du Moulin de Massy
43 Rue du Saule Trapu
Batiment A - ler Etage
91300 Massy, France
Tel: 33-1-69-53-63-20
Fax: 33-1-69-30-90-79

Germany
Steinheilstrasse 10
D-85737 Ismaning, Germany
Tel: 49-89-627-144-0
Fax: 49-89-627-144-44

Italy
Via Quasimodo, 12
20025 Legnano (MI)
Milan, Italy
Tel: 39-0331-742611
Fax: 39-0331-466781

Netherlands
Waegenburghtplein 4
NL-5152 JR, Drunen, Netherlands
Tel: 31-416-690399
Fax: 31-416-690340

United Kingdom
505 Eskdale Road
Winnersh Triangle
Wokingham
Berkshire, England RG41 5TU
Tel: 44-118-921-5869
Fax: 44-118-921-5820

05/28/04

© 2004 Microchip Technology Inc.