Si5338-EVB

Si5330/34/35/38 Evaluation Board User's Guide

Description

The Si5338-EVB is used for evaluating the Si5330/34/35/38 family of any-frequency, any-output clock generators and clock buffers.

EVB Features

- Fully powered from a single USB port.
- Onboard 25 MHz XTAL allows standalone asynchronous operation on the Si5334/35/38.
- GUI programmable V_{DD} supply allows device to operate from 3.3, 2.5, or 1.8 V.
- GUI programmable V_{DDO} supplies allow each of the four outputs to have its own supply voltage selectable from 3.3, 2.5, 1.8, or 1.5 V
- GUI-controlled voltage, current, and power measurements of V_{DD} and all four V_{DDO} supplies.
- Voltage supply jumpers allow easy access for use of external supplies or current measurements.
- Input signal jumpers allow external control of pin functions such as output enable, phase inc/dec, frequency inc/dec, and I2C_LSB.

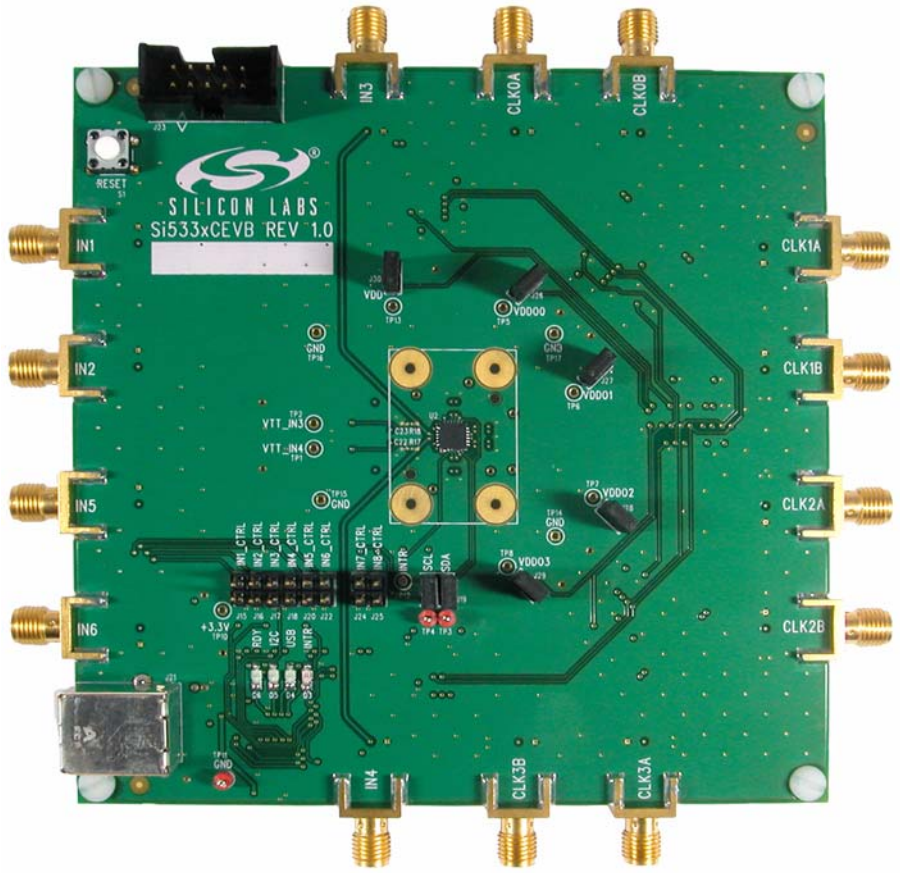

Copyright © 2020 by Silicon Labs

1. Functional Block Diagram

A functional block diagram of the EVB is shown in Figure 1. The MCU performs the USB to I^2C conversion, controls the voltage regulators, monitors the INTR pin, and controls the four status LEDS. It also provides control of the eight input pins when the INx_CTRL jumpers are populated. There are five programmable voltage regulators (VDD, VDDO0, VDDO1, VDDO2, VDDO3), which supply power to the Si533x device. VDD and VDDO jumpers allow the option of powering the device from external supplies, or as a convenient point for measuring current. I^2C jumpers allow disconnection of the Si533x device from the I^2C bus to allow external control from another I^2C master.

For the Si5334, Si5335, and Si5338 devices, the EVB is shipped with an onboard 25 MHz XTAL to allow stand-alone asynchronous operation. For Si5335 emulation, synchronization to an external reference is done via IN1 and IN2. Removal of the XTAL and addition of two 0 ohm resistors is required. IN3, IN4, IN5, and IN6 are not available as external clock inputs for Si5335.

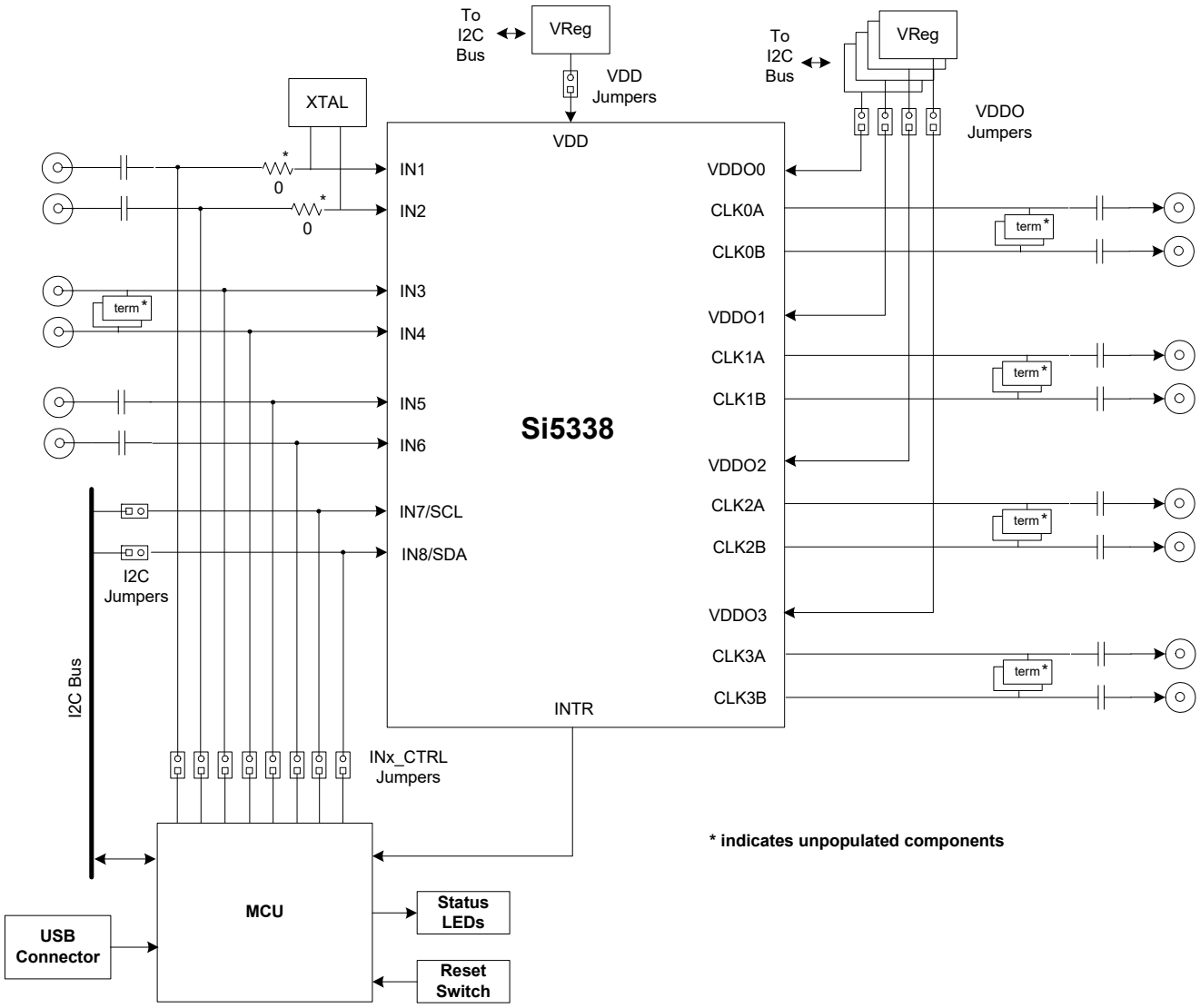

Figure 1. EVB Functional Block Diagram

2. Quick Start

1. Install the ClockBuilder Pro software.
2. Connect a USB cable from the EVB to the PC where the software was installed.
3. Leave the jumpers as installed from the factory, and launch ClockBuilder Pro.

3. Jumpers

The Si5338-EVB is shipped with jumpers installed on the following positions:

- **VDD**—Connects the Si533x VDD pin to the VDD programmable voltage regulator.
- **VDDO0**—Connects the Si533x VDDO0 pin to the VDDO0 programmable voltage regulator.
- **VDDO1**—Connects the Si533x VDDO1 pin to the VDDO1 programmable voltage regulator.
- **VDDO2**—Connects the Si533x VDDO2 pin to the VDDO2 programmable voltage regulator.
- **VDDO3**—Connects the Si533x VDDO3 pin to the VDDO3 programmable voltage regulator.
- **SCL**—Connects the Si533x SCL pin to the I^2C bus from the MCU.
- **SDA**—Connects the Si533x SDA pin to the I^2C bus from the MCU.

The INx-CTRL jumpers are optional jumpers for enabling MCU control of the Si533x input pins. This feature may be available in future software releases.

4. Status LEDS

There are four status LEDs on the Si5338-EVB:

- **RDY** (Green)—Indicates that the EVB is operating normally. This LED should always be on.
- **I^2C** (Green)—Indicates when there is active I^2C communication between the MCU and the Si533x device or between the MCU and voltage regulators.
- **USB** (Green)—Indicates when there is active communication between the PC and the MCU over the USB bus.
- **INTR** (Red)—The MCU has detected that the interrupt pin of the Si533x device is enabled. The most probable cause for an interrupt is because the Si533x has lost its input signal or the PLL has lost lock. The “Status” tab of the GUI will identify the event that caused the interrupt to occur.

5. Inputs

The Si5338-EVB has six SMA connectors (IN1-IN6) for receiving external signals. Two of the signals are differential, and two are single-ended.

5.1. Differential Inputs (IN1/IN2, IN5/IN6)

The differential inputs only need a differential voltage swing of 300 mV to operate, which makes them compatible with most differential signal types. See “AN408: Termination Options for Any-Frequency, Any-Output Clock Generators and Clock Buffers—Si5338, Si5334, Si5330”, or Si5335 data sheet if applicable, for details on interfacing with compatible signal types. It is also possible to lock the Si5334/35/38 to an external signal generator using one side of the differential input and grounding its complementary side. Take care not to exceed the max differential voltage of 1.2 V on these inputs. The board is shipped with a 25 MHz XTAL connected to IN1/IN2. The XTAL removal and resistor changes are required for Si5335 evaluation with an input clock since only IN1 and IN2 are available for input clocking with Si5335. Note that regardless of device, any external input to IN1 & IN2 must be limited to 1.2 V peak-to-peak (see Figure 2 for resistor locations). When evaluating the Si5330, the XTAL must be removed. The differential input on pins IN5/IN6 is ac-coupled with a 100 Ω line termination (R39).

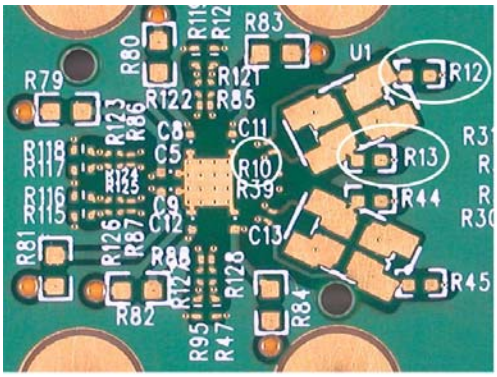

Figure 2. Optional Termination Resistors for Differential Inputs IN1/IN2

5.2. Single-Ended Inputs (IN3, IN4) [Not supported in Si5335]

These inputs are dc-coupled to the device. They are compatible with a signal swing as low as 100 mV and a maximum of 3.63 V. The signal should have a minimum amount of dc bias to ensure that it is never below ground level.

The EVB provides pads for optional input terminations. These may be necessary when interfacing to SSTL and HSTL signals.

Note: For details on populated vs. non-populated components, refer to "8. Bill of Materials" on page 9.

6. Outputs (CLKxA/CLKxB)

Each of the four differential output drivers is capacitively coupled to the SMA connectors; so, the output signal will have no dc bias. If a signal with dc bias is required, the ac coupling capacitors can be replaced with a 0 Ω resistor.

The EVB provides pads for optional output terminations. These may be necessary when interfacing to SSTL and HSTL signals.

6.1. Evaluating LVPECL Output Clocks

The EVB by default is populated to allow evaluating of all output clock formats with the exception of LVPECL outputs. To evaluate LVPECL signals on the Si5338-EVB, a few components must be soldered down on the board. Take CLK0 for example of. Note that CLK0 has R85, R121/R122, R1/R4, R2/R5, R3/R6, C4/C7, and C15/C17 attached to the nets of interest. The EVB comes with only R121/R122 and C15/C17 installed. This allows support of all output types except LVPECL.

Evaluating an ac-coupled LVPECL clock on CLK0 requires a bias resistor of 130 or 200 Ω to ground on each of the output lines depending on driver VDDO. Refer to AN408, or Si5335 data sheet if applicable, for termination details. Make the following changes depending on the CLK0 VDDO voltage:

- For 3.3 V LVPECL (ac-coupled)
  - · Place 200 Ω resistors in place of R1 and R4.
  - · Place 0 Ω resistors in place of C4 and C7.
- For 2.5 V LVPECL (ac-coupled)
  - · Place 130 Ω resistors in place of R1 and R4.
  - · Place 0 Ω resistors in place of C4 and C7.

The LVPECL output may also be dc-coupled to an LVPECL receiver. To dc-couple the CLK0 output, make the component changes below. Note that R2, R3, R5, and R6 depend on VDDO.

- Place 0 Ω resistors in place of C15 and C17.
- Place 50 Ω resistors in place of R1 and R4.
- Place C4 and C7
- Select R2 and R3 (and similarly R5 and R6) to give a termination voltage of VTT = VDDO – 2 V.

For LVPECL termination on CLK1, 2, and 3 follow the guidelines above and refer to the schematics in “7. Si5338-EVB Schematics” as needed.

6.2. Evaluating SSTL/HSTL Output Clocks

To support SSTL/HSTL outputs, either single-ended or differential, replace the output dc blocking capacitors with a 0 Ω resistor. For example, for CLK0 output, replace C15 with 0 Ω resistor for single-ended, or replace both C15 & C17 with 0 Ω for differential output. Do the same for CLK1,2,3 as needed. Remember to properly terminate at the receiver input.

The Si5338-EVB can support on-board termination of SSTL/HSTL outputs, if on-board terminated, measurement of the clock output at the SMA connector would require a high impedance measurement device to prevent overloading of the output. If on-board output termination is desired, the following components must be installed (using CLK0 as an example.)

For 1.8 or 2.5 V V_{DDO}: R2 = 2 kΩ, R3 = 2 kΩ, R1 = 50 Ω, C4 = 0.1 µF

For 3.3 V V_{DDO}: R2 = 2.42 kΩ, R3 = 2 kΩ, R1 = 50 Ω, C4 = 0.1 µF

Follow similar guidelines for CLK1,2,3 as required. Refer to AN408, or Si5335 data sheet if applicable, for more details on clock termination.

7. Si5338-EVB Schematics

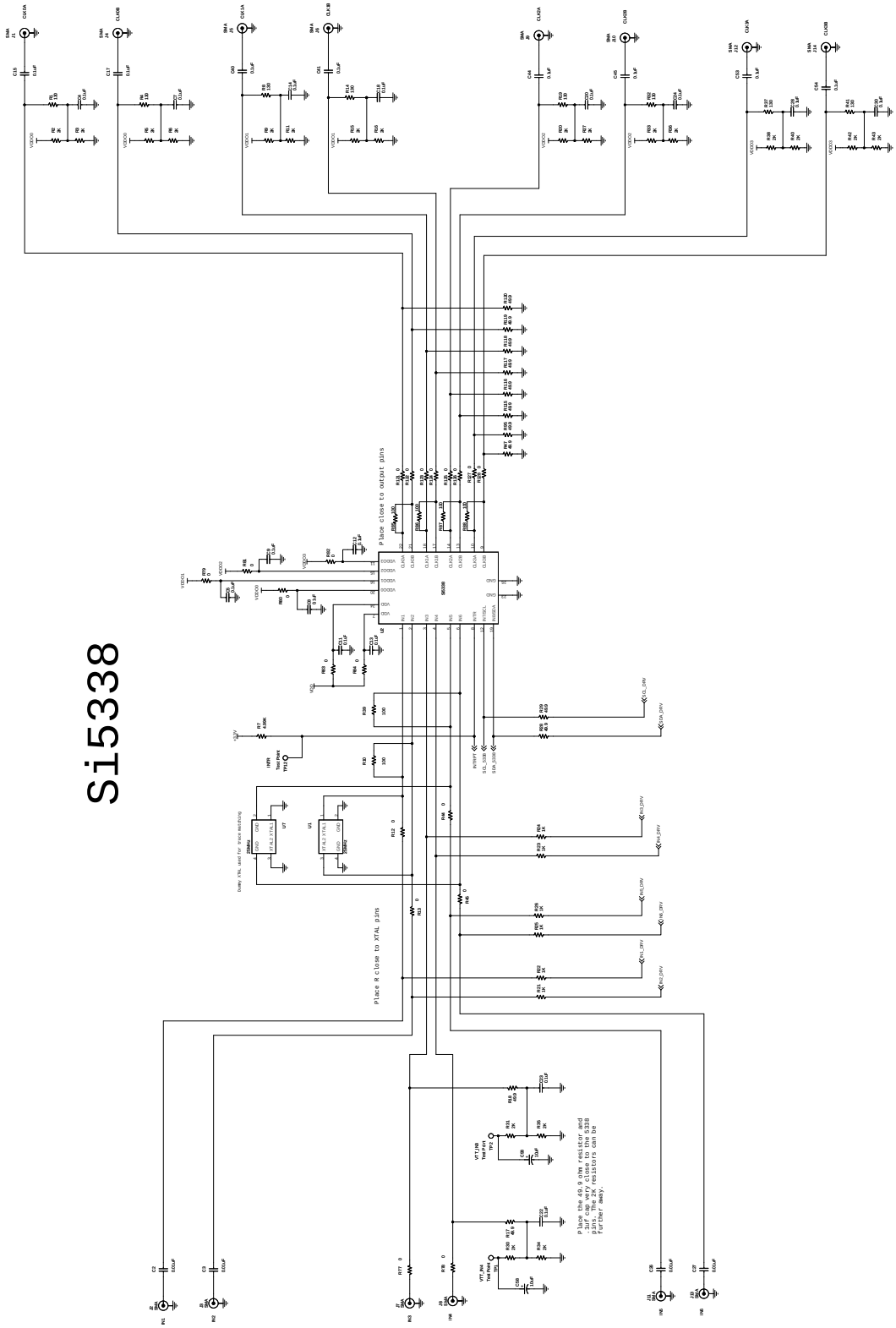

Figure 3. Si5338-EVB Main Schematic

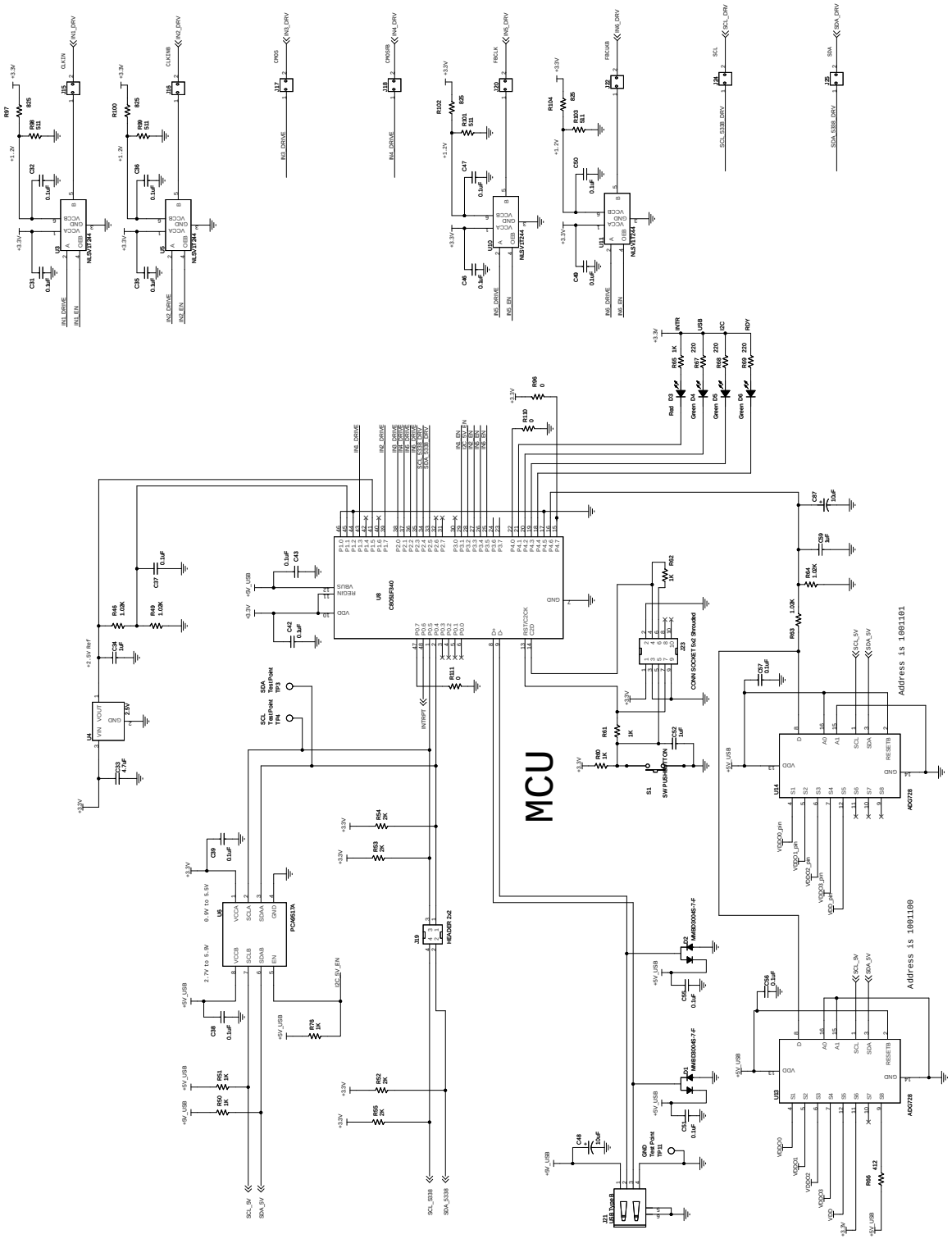

Figure 4. Si5338-EVB MCU Schematic

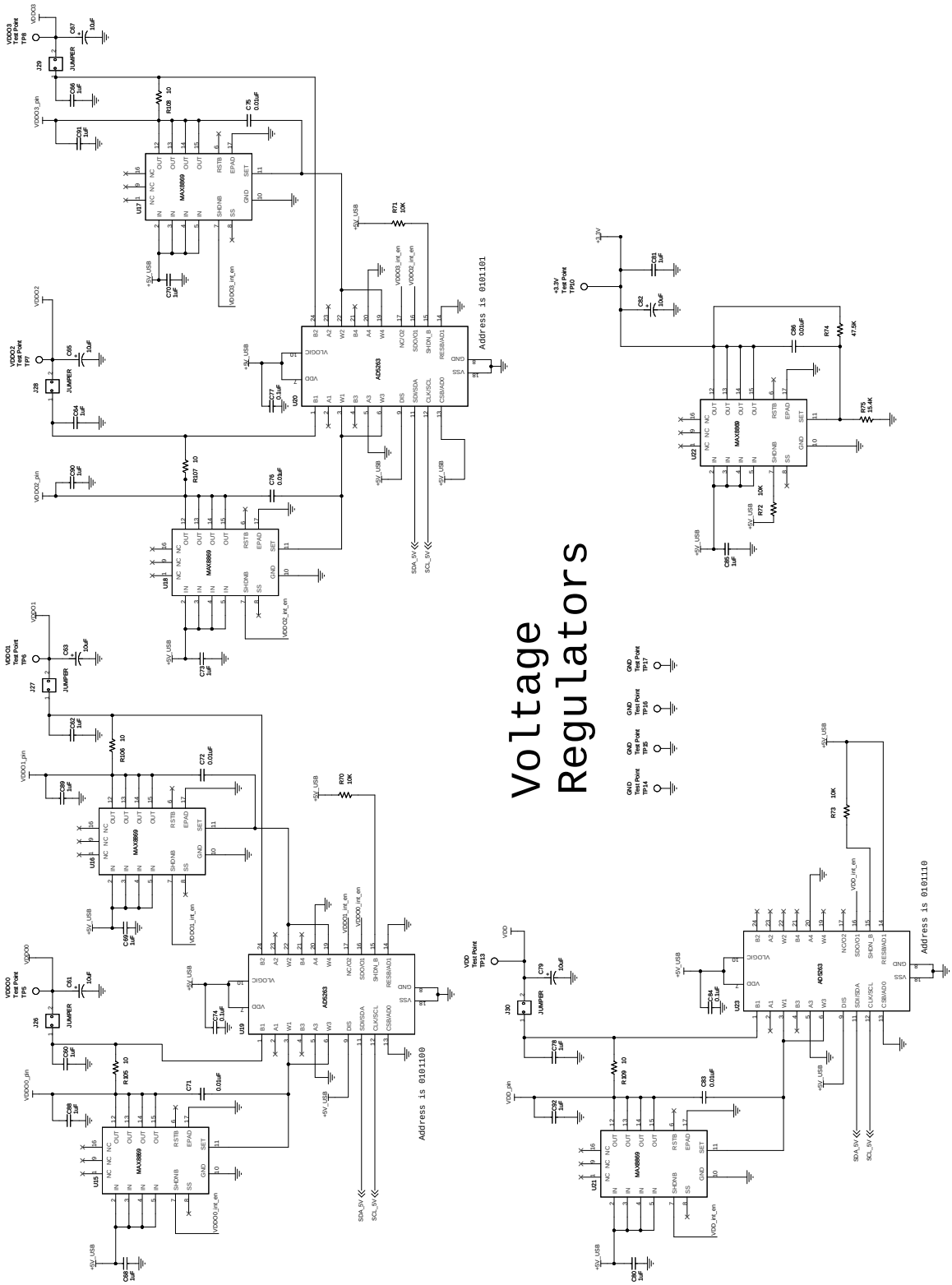

Figure 5. Si5338-EVB Voltage Regulation Schematic

8. Bill of Materials

Table 1. Si5338-EVB Bill of Materials

Item	NI	Qty	Reference	Value	Manufacturer	Part Number
1		10	C2,C3,C26,C27,C71,C72, C75,C76,C83,C86	0.01 µF	Venkel	C0402X7R100-103M
2		35	C15,C17,C31,C32,C35,C36,C37,C38,C39,C40,C41,C42,C43, C44,C45,C46,C47,C49,C50,C51,C53,C54,C55,C56,C57,C74, C77,C84,C5,C8,C9,C11,C12	0.1 µF	Venkel	C0402X7R100-104K
			C13			
4		1	C33	4.7 µF	Venkel	C1206X7R100-475M
5		3	C34,C52,C59	1 µF	Venkel	C1206X7R250-105K
6		7	C48,C61,C63,C65,C67,	10 µF	Kemet	B45196H5106M309
			C79,C82			
7		17	C60,C62,C64,C66,C68,C69,	1 µF	Venkel	C0603X7R100-105K
			C70,C73,C78,C80,C81,C85,			
			C88,C89,C90,C91,C92			
8		2	D1,D2	MMBD3004S-7-F	Diodes Inc.	MMBD3004S-7-F
9		1	D3	Red	Panasonic	LN1271RAL
10		3	D4,D5,D6	Green	Panasonic	LN1371G
11		14	J1,J2,J3,J4,J5,J6,J7,J8,	SMA	Johnson Components	142-0701-801
			J9,J10,J11,J12,J13,J14			
12		13	J15,J16,J17,J18,J20,J22,	JUMPER	Samtec	TSW-102-07-T-S
			J24,J25,J26,J27,J28,J29,J30			
13		1	J19	HEADER 2x2	Samtec	TSW-102-07-T-D
14		1	J21	USB Type B	Tyco	292304-1
15		1	J23	CONN SOCKET 5x2 Shrouded	Tyco	5103309-1
18		1	R7	4.99K	Venkel	CR0402-16W-4991F
19		1	R39	100	Venkel	CR0201-20W-1000F
20		7	R44,R45,R77,R78,R96,R110,R111	0	Venkel	CR0402-16W-000
21		2	R28,R29	49.9	Venkel	CR0402-16W-49R9F
22		13	R21,R22,R23,R24,R25,R26,	1K	Venkel	CR0402-16W-102J
			R50,R51,R60,R61,R62,R65,R76			
23		4	R46,R49,R63,R64	1.02K	Venkel	TFCR0402-16W-E-1021B
25		4	R52,R53,R54,R55	2K	Venkel	CR0402-16W-2001F
26		1	R66	412	Venkel	TFCR0402-16W-E-4120B
27		3	R67,R68,R69	220	Venkel	CR0402-16W-221J
28		4	R70,R71,R72,R73	10K	Venkel	CR0402-16W-103J
29		1	R74	47.5K	Venkel	CR0603-10W-4752F
30		1	R75	15.4K	Venkel	CR0603-10W-1542F
31		6	R79,R80,R81,R82,R83,R84	0	Venkel	CR0603-16W-000

Table 1. Si5338-EVB Bill of Materials (Continued)

Item	NI	Qty	Reference	Value	Manufacturer	Part Number
32		4	R97,R100,R102,R104	825	Venkel	CR0603-10W-8250F
33		4	R98,R99,R101,R103	511	Venkel	CR0603-10W-5110F
34		5	R105,R106,R107,R108,R109	10	Venkel	CR2512-2W-10R0D
35		8	R121,R122,R123,R124, R125,R126,R127,R128	0	Venkel	CR0201-20W-000F
36		1	S1	SW PUSHBUTTON	Mountain Switch	101-0161-EV
37		1	TP11	Test Point	Kobiconn	151-207
38		1	U1	25 MHz	Epson	FA-238 25.0000MB
39		1	U2	Si5338	SiLabs	Si5338N-A-GMR
40		4	U3,U5,U10,U11	NLSV1T244	On Semi	NLSV1T244MUTBG
41		1	U4	2.5 V	Analog Devices	AD1582BRT
42		1	U6	PCA9517A	NXP	PCA9517AD
43		1	U8	C8051F340	SiLabs	C8051F340-GQ
44		2	U13,U14	ADG728	Analog Devices	ADG728BRUZ
45		6	U15,U16,U17,U18,U21,U22	MAX8869	MAXIM	MAX8869EUE50
46		3	U19,U20,U23	AD5263	Analog Devices	AD5263BRUZ20
47		4	Standoffs		SPC Technology	2397
48		4	Screws		Richco	NSS-4-4-01
49		7	Jumpers		Sullins	SPC02SYAN
Do Not Populate						
2	NI	9	C4,C7,C14,C18,	0.1 µF	Venkel	C0402X7R100-104K
			C22,C23,C20, C24,C28,C30,			
6	NI	3	C58, C93, C87	10 µF	Kemet	B45196H5106M309
16	NI	8	R1,R4,R8,R14,R19,R32,R37,	130	Venkel	CR0402-16W-131F
			R41			
17	NI	20	R2,R3,R5,R6,R9,R11,R15,	2K	Venkel	TFCR0402-16W-E-2001B
			R16,R20,R27,R30,R31,R33,			
			R34,R35,R36,R38,R40,R42,			
			R43			
19	NI	5	R10,R85,R86,R87,R88	100	Venkel	CR0201-20W-1000F
20	NI	2	R12,R13	0	Venkel	CR0402-16W-000
24	NI	8	R47,R95,R115,R116,R117,	49.9	Venkel	CR0402-16W-49R9F
			R118,R119,R120			
21	NI	2	R17,R18	49.9	Venkel	CR0402-16W-49R9F
37	NI	12	TP1,TP2,TP3,TP4,TP5,TP6,	Test Point	Kobiconn	151-207
			TP7,TP8,TP9,TP10,TP12,TP13			
38	NI	1	U7	25 MHz	Epson	FA-238 25.0000MB-W

Revision History

Revision 1.5

March, 2020

- Replaced ClockBuilder Desktop instructions with ClockBuilder Pro instructions.

Revision 1.4

November, 2011

- Added "6.1. Evaluating LVPECL Output Clocks" on page 5.
- Added references to the Si5335.

Revision 1.3

July, 2011

- Added "8. Bill of Materials" on page 9.

Revision 1.2

June, 2010

- Changed “Any Rate Clock Generator” to “ClockBuilder Desktop” throughout.
- Changed “MultiSynth Clock Programmer” to “ClockBuilder Desktop” throughout.
- Updated Figure 3 on page 6.
- Removed “Uninstaller Option” figure.
- Updated Figure 8 on page 9.

Revision 1.1

August, 2009

- Changed “Si533x configuration” to “Any Rate Clock Generator” throughout.
- Changed “Si5338 Programmer” to “MultiSynth Clock Programmer” throughout.
- Updated Table 1, “Programs,” on page 7.
- Updated Figures 3, 4, and 8.

Revision 1.0

November, 2008

- Replaced the voltage input terminal block with programmable regulators.
- The board is entirely powered from USB power.
- Added an additional LED to indicate MCU ready.
- Added jumpers on all input pins to allow external control of features, such as output enable, and frequency and phase increment and decrement.

Revision 0.1

September, 2008

- Initial release.



ClockBuilder Pro

One-click access to Timing tools, documentation, software, source code libraries & more. Available for Windows and iOS (CBGo only).

www.silabs.com/CBPro

Timing Portfolio
www.silabs.com/timing

SW/HW
www.silabs.com/CBPro

Quality
www.silabs.com/quality

Support and Community
community.silabs.com

Disclaimer
Silicon Labs intends to provide customers with the latest, accurate, and in-depth documentation of all peripherals and modules available for system and software implementers using or intending to use the Silicon Labs products. Characterization data, available modules and peripherals, memory sizes and memory addresses refer to each specific device, and "Typical" parameters provided can and do vary in different applications. Application examples described herein are for illustrative purposes only. Silicon Labs reserves the right to make changes without further notice to the product information, specifications, and descriptions herein, and does not give warranties as to the accuracy or completeness of the included information. Without prior notification, Silicon Labs may update product firmware during the manufacturing process for security or reliability reasons. Such changes will not alter the specifications or the performance of the product. Silicon Labs shall have no liability for the consequences of use of the information supplied in this document. This document does not imply or expressly grant any license to design or fabricate any integrated circuits. The products are not designed or authorized to be used within any FDA Class III devices, applications for which FDA premarket approval is required, or Life Support Systems without the specific written consent of Silicon Labs. A "Life Support System" is any product or system intended to support or sustain life and/or health, which, if it fails, can be reasonably expected to result in significant personal injury or death. Silicon Labs products are not designed or authorized for military applications. Silicon Labs products shall under no circumstances be used in weapons of mass destruction including (but not limited to) nuclear, biological or chemical weapons, or missiles capable of delivering such weapons. Silicon Labs disclaims all express and implied warranties and shall not be responsible or liable for any injuries or damages related to use of a Silicon Labs product in such unauthorized applications.

Trademark Information
Silicon Laboratories Inc.®, Silicon Laboratories®, Silicon Labs®, SiLabs® and the Silicon Labs logo®, Bluegiga®, Bluegiga Logo®, ClockBuilder®, CMEMS®, DSPLL®, EFM®, EFM32®, EFR, Ember®, Energy Micro, Energy Micro logo and combinations thereof, "the world's most energy friendly microcontrollers", Ember®, EZLink®, EZRadio®, EZRadioPRO®, Gecko®, Gecko OS, Gecko OS Studio, ISOmodem®, Precision32®, ProSLIC®, Simplicity Studio®, SiPHY®, Telegesis, the Telegesis Logo®, USBXpress® , Zentri, the Zentri logo and Zentri DMS, Z-Wave®, and others are trademarks or registered trademarks of Silicon Labs. ARM, CORTEX, Cortex-M3 and THUMB are trademarks or registered trademarks of ARM Holdings. Keil is a registered trademark of ARM Limited. Wi-Fi is a registered trademark of the Wi-Fi Alliance. All other products or brand names mentioned herein are trademarks of their respective holders.

Silicon Laboratories Inc.
400 West Cesar Chavez
Austin, TX 78701
USA

http://www.silabs.com