Si53159-EVB

Si53159 Evaluation Board User's Guide

Description

The Si53159 is a nine port PCIe clock buffer compliant to the PCIe Gen1, Gen2 and Gen3 standards. The Si53159 is a 48-pin QFN device that operates on a 3.3 V power supply and can be controlled using SMBus signals along with hardware control input pins. The device is spread aware and accepts frequency spread differential clock frequency range from 100 to 210 MHz. The connections are described in this document.

EVB Features

This document is intended to be used in conjunction with the Si53159 device and data sheet for the following tests:

- PCIe Gen1, Gen2, Gen3 compliancy
- Power consumption test
- Jitter performance
- Testing out I^2C code for signal tuning
- In-system validation where SMA connectors are present

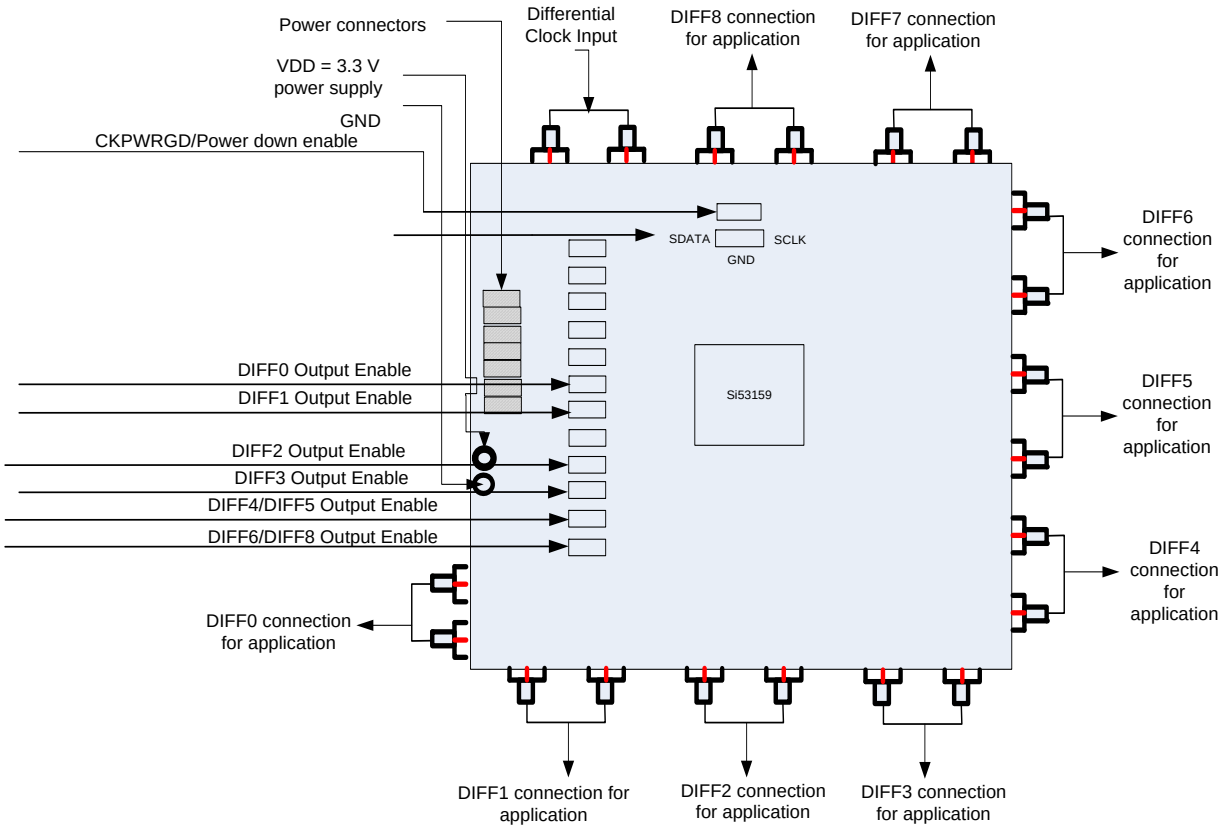

Copyright © 2012 by Silicon Labs

1. Front Panel

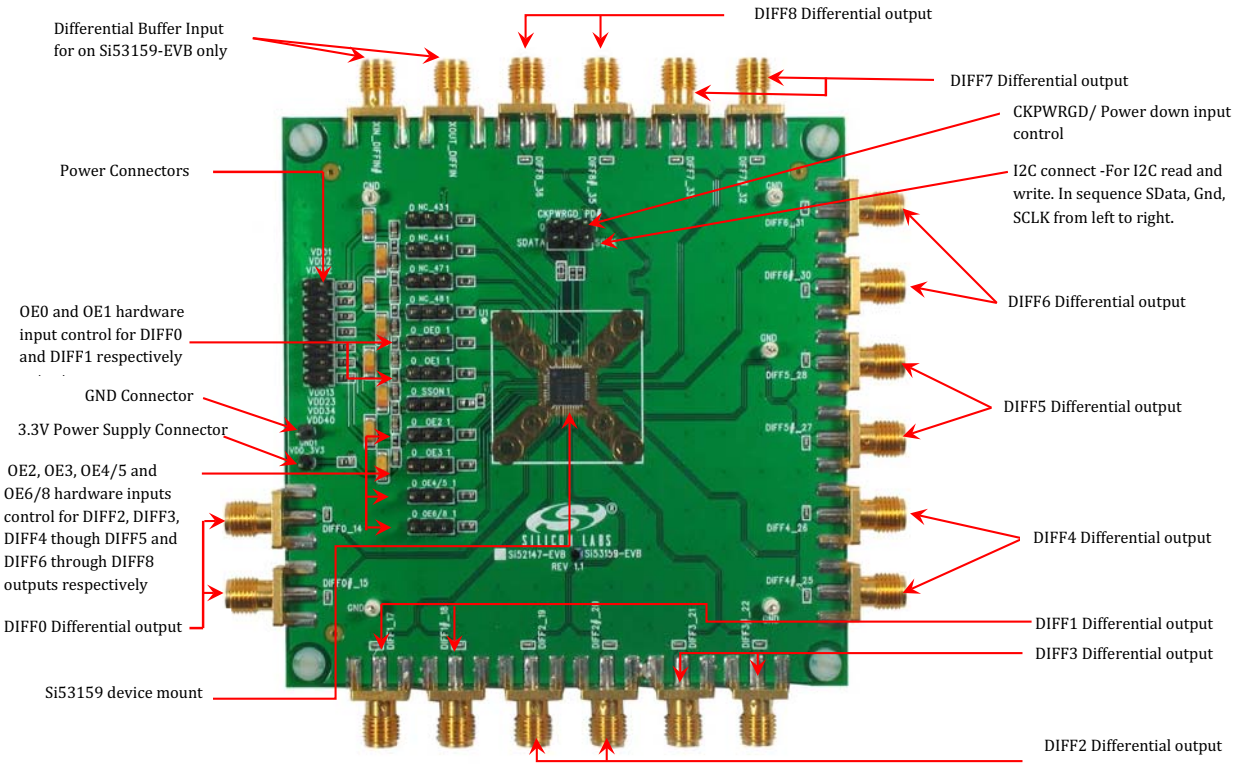

Figure 1. Evaluation Module Front Panel

Table 1. Input Jumper Settings

Jumper Label	Type	Description
OE0	I	**OE0, 3.3 V Input for Enabling DIFF0 Clock Output**. 1 = DIFF0 enabled, 0 = DIFF0 disabled.
OE1	I	**OE1, 3.3 V Input for Enabling DIFF1 Clock Output**. 1 = DIFF1 enabled, 0 = DIFF1 disabled.
OE2	I	**OE2, 3.3 V Input for Enabling DIFF2 Clock Output**. 1 = DIFF2 enabled, 0 = DIFF2 disabled.
OE3	I	**OE3, 3.3 V Input for Enabling DIFF3 Clock Output**. 1 = DIFF3 enabled, 0 = DIFF3 disabled.
OE4/5	I	**OE4/5, 3.3 V Input for Enabling DIFF4 and DIFF5 Clock Outputs.** 1 = DIFF4 & DIFF5 enabled, 0 = DIFF4 & DIFF5 disabled.
OE6/8	I	**OE6/8, 3.3 V Input for Enabling DIFF6, DIFF7 and DIFF8 Clock Outputs.** 1 = DIFF6, DIFF7 & DIFF8 enabled, 0 = DIFF6, DIFF7 & DIFF8 disabled.
CLKPWGD/$\overline{PD}$	I	**3.3 V LVTTL Input.** After CLKPWGD (active high) assertion, this pin becomes a real-time input for asserting power down (active low).
SDATA	I/O	**SMBus-Compatible SDATA**.
SCLK	I	**SMBus-Compatible SCLOCK**.

1.1. Generating DIFF Outputs from the Si53159

Upon power-on of the device if the differential input is applied and input pins are left floating, by default all DIFF outputs DIFF[0:8] are ON. The input pin headers have clear indication of jumper settings for setting logic low (0) and high (1) as shown in the figure below, the jumper placed on the middle and left pin will set input OE0 to low; and jumper placed on the middle and right pin will set input OE0 to high.

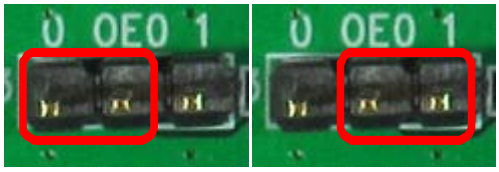

The output enable pins can be changed on the fly to observe outputs stopped cleanly. Input functionality is explained in detail below.

1.1.1. OE [0:8] Inputs

The output enable pins can change on the fly when the device is on. Deasserting (valid low) results in corresponding DIFF output to be stopped after their next transition with final state low/low. Asserting (valid high) results in corresponding output that was stopped are to resume normal operation in a glitch-free manner.

Each of the hardware OE [0:8] pins are mapped via I^2C to control bit in Control register. The hardware pin and the Register Control Bit both need to be high to enable the output. Both of these form an “AND” function to disable or enable the DIFF output. The DIFF outputs and their corresponding I^2C control bits and hardware pins are listed in Table 2.

Table 2. Output Enable Control

I^2C Control Bit	Output	Hardware Control Input
Byte1 [bit 4]	DIFF0	OE0
Byte1 [bit 2]	DIFF1	OE1
Byte2 [bit 1]	DIFF2	OE2
Byte2 [bit 0]	DIFF3	OE3
Byte1 [bit 7]	DIFF4	OE4/5
Byte1 [bit 6]	DIFF5	OE4/5
Byte2 [bit 5]	DIFF6	OE6/8
Byte2 [bit 4]	DIFF7	OE6/8
Byte2 [bit 3]	DIFF8	OE6/8

2. Schematics

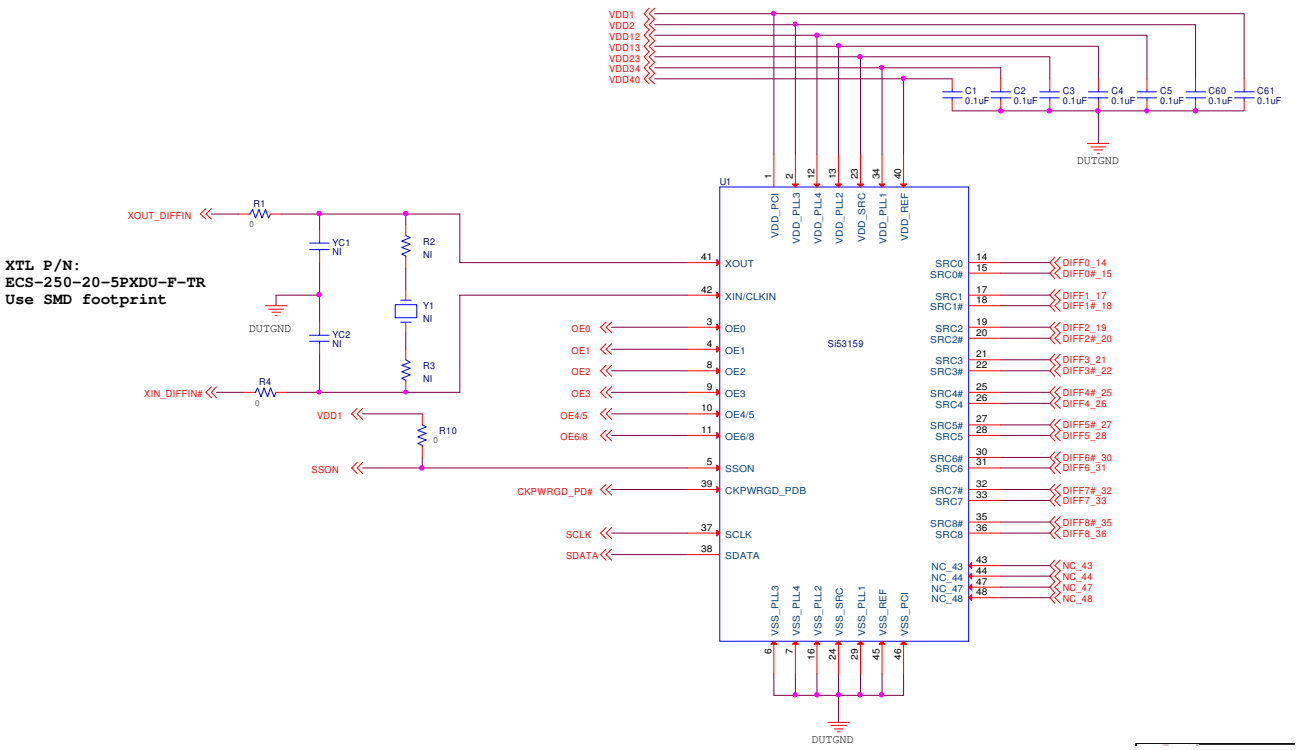

Figure 2. QFN-48 Device Connection

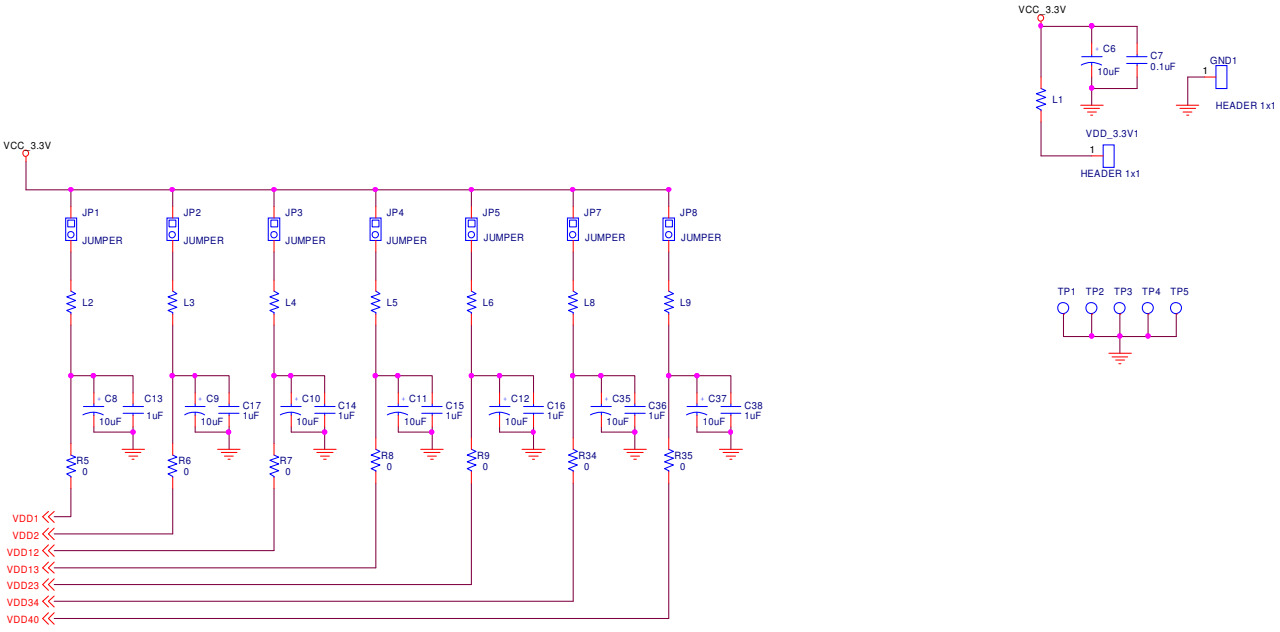

Figure 3. Device Power Supply

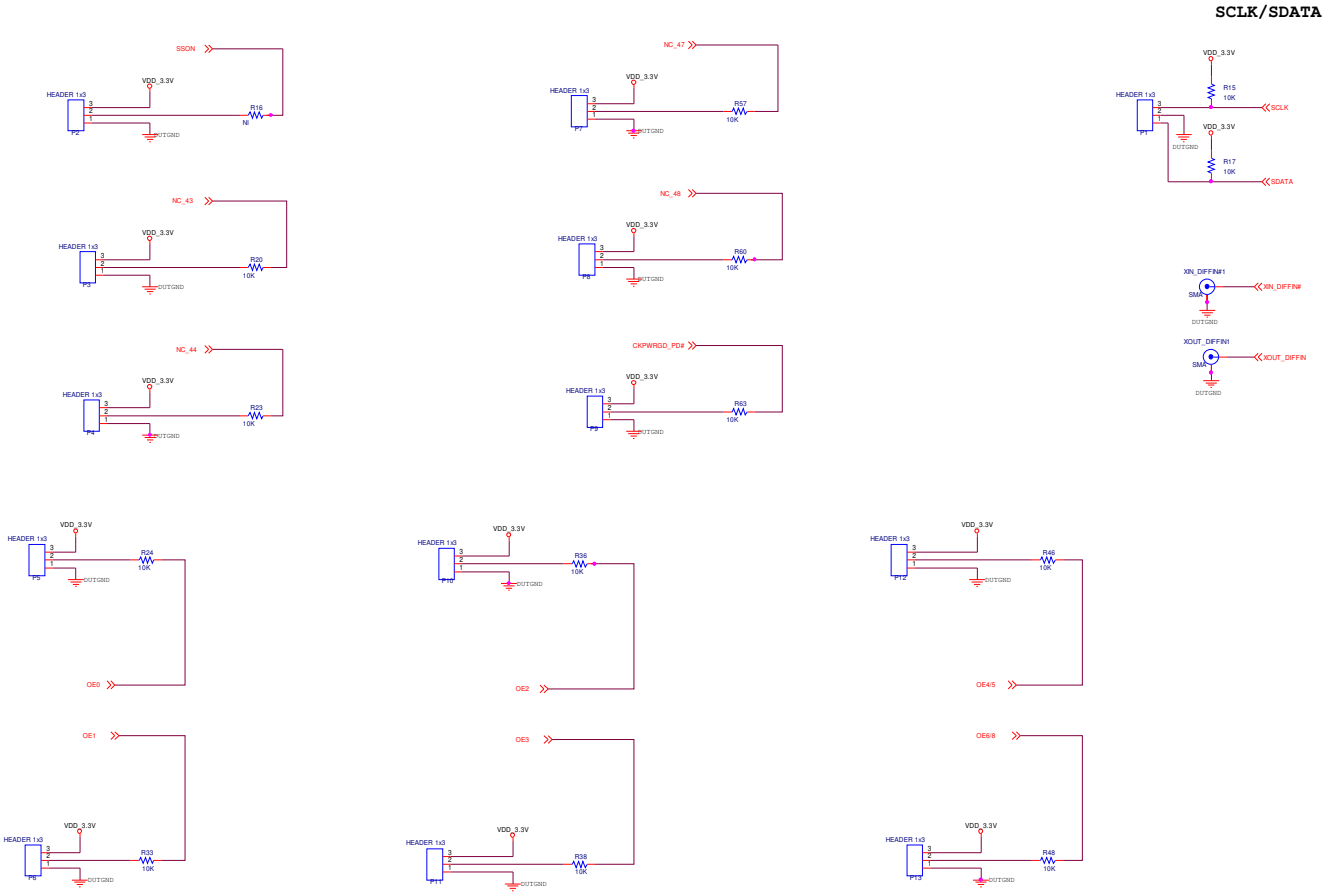

Figure 4. Clock and Control Signals

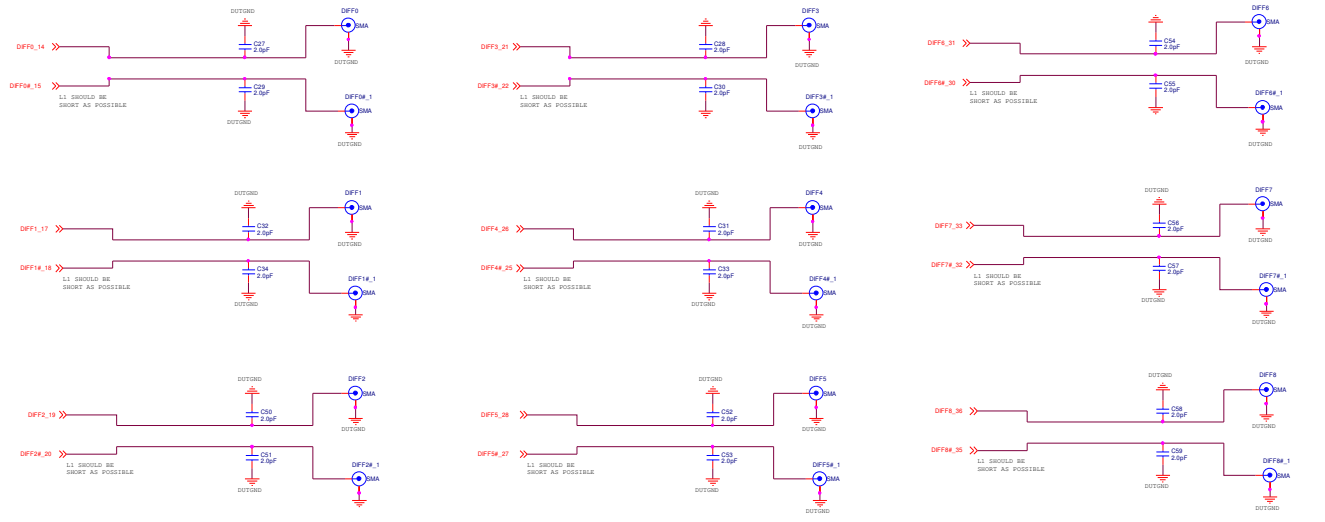

Figure 5. Differential Clock Signals



ClockBuilder Pro

One-click access to Timing tools, documentation, software, source code libraries & more. Available for Windows and iOS (CBGo only).

www.silabs.com/CBPro

Timing Portfolio
www.silabs.com/timing

SW/HW
www.silabs.com/CBPro

Quality
www.silabs.com/quality

Support and Community
community.silabs.com

Disclaimer
Silicon Laboratories intends to provide customers with the latest, accurate, and in-depth documentation of all peripherals and modules available for system and software implementers using or intending to use the Silicon Laboratories products. Characterization data, available modules and peripherals, memory sizes and memory addresses refer to each specific device, and "Typical" parameters provided can and do vary in different applications. Application examples described herein are for illustrative purposes only. Silicon Laboratories reserves the right to make changes without further notice and limitation to product information, specifications, and descriptions herein, and does not give warranties as to the accuracy or completeness of the included information. Silicon Laboratories shall have no liability for the consequences of use of the information supplied herein. This document does not imply or express copyright licenses granted hereunder to design or fabricate any integrated circuits. The products must not be used within any Life Support System without the specific written consent of Silicon Laboratories. A "Life Support System" is any product or system intended to support or sustain life and/or health, which, if it fails, can be reasonably expected to result in significant personal injury or death. Silicon Laboratories products are generally not intended for military applications. Silicon Laboratories products shall under no circumstances be used in weapons of mass destruction including (but not limited to) nuclear, biological or chemical weapons, or missiles capable of delivering such weapons.

Trademark Information
Silicon Laboratories Inc., Silicon Laboratories, Silicon Labs, SiLabs and the Silicon Labs logo, CMEMS®, EFM, EFM32, EFR, Energy Micro, Energy Micro logo and combinations thereof, "the world's most energy friendly microcontrollers", Ember®, EZLink®, EZMac®, EZRadio®, EZRadioPRO®, DSPLL®, ISOmodem ®, Precision32®, ProSLIC®, SiPHY®, USBXpress® and others are trademarks or registered trademarks of Silicon Laboratories Inc. ARM, CORTEX, Cortex-M3 and THUMB are trademarks or registered trademarks of ARM Holdings. Keil is a registered trademark of ARM Limited. All other products or brand names mentioned herein are trademarks of their respective holders.

SILICON LABS

Silicon Laboratories Inc.
400 West Cesar Chavez
Austin, TX 78701
USA

http://www.silabs.com