Si53108-EVB

Si53108 Evaluation Board User's Guide

Description

The Si53108-EVB can be used to evaluate the Si53108-A01AGM, an 8-output PCIe Gen1/2/3 buffer that can operate in either fanout or zero delay mode.

Features

- 10-inch traces to evaluate signal integrity
- The signal traces of the input and outputs have a single-ended impedance of 50 ohms, and differential impedance of 100 ohms.
- The series resistance on the outputs are set to match to this impedance design.
- DC pin controls per data sheet specification.
- Ability to measure input to output propagation delay.
- Ability to measure PCIe clock jitter.
- Ability to program features of Si53108-A01AGM via I^2C interface.

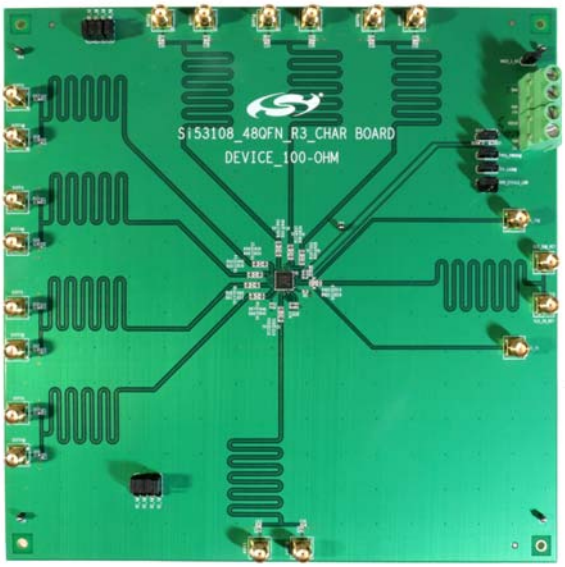

Copyright © 2014 by Silicon Laboratories

1. Schematics

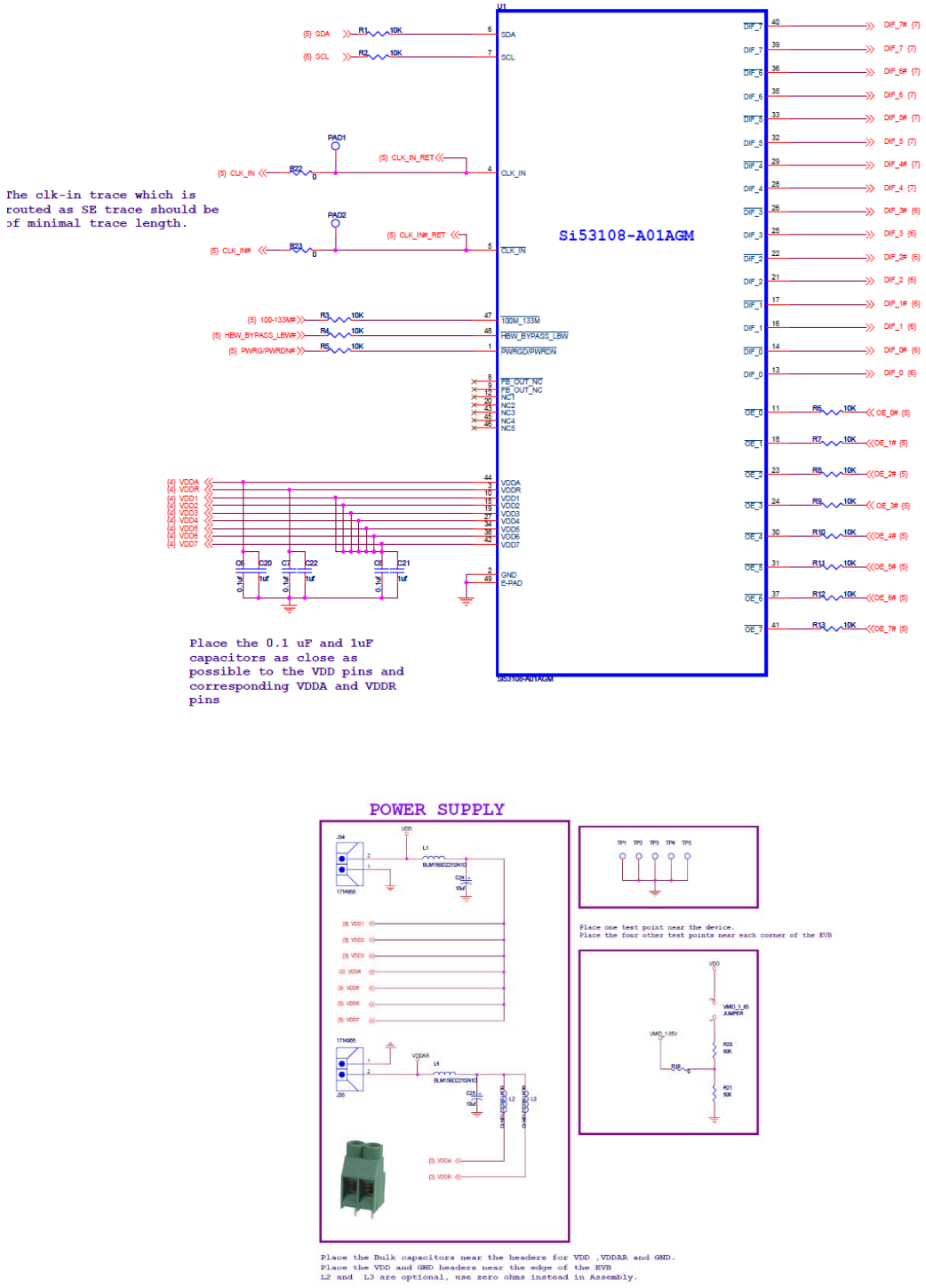

Figure 1. Schematic 1

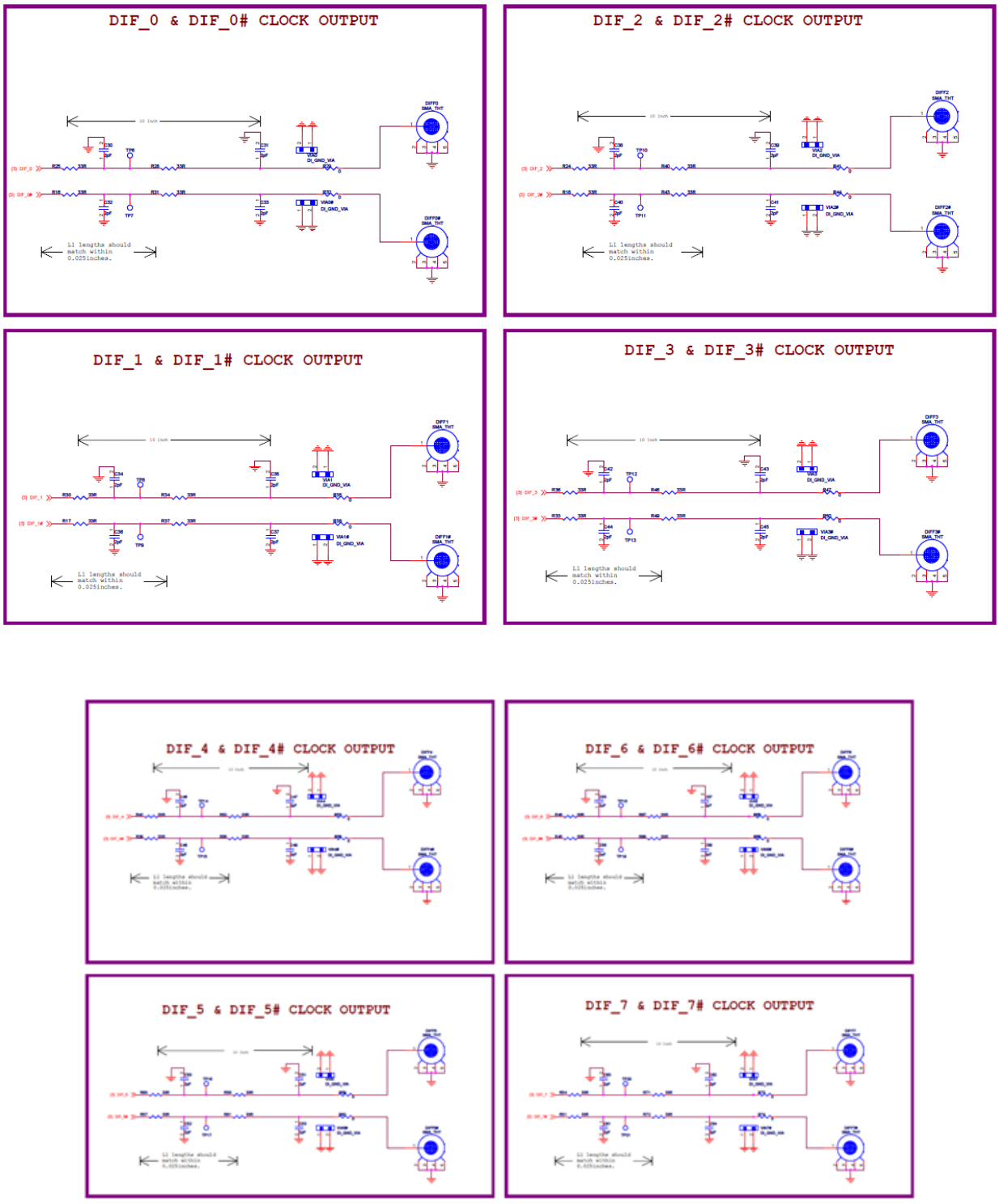

Figure 2. Schematic 2

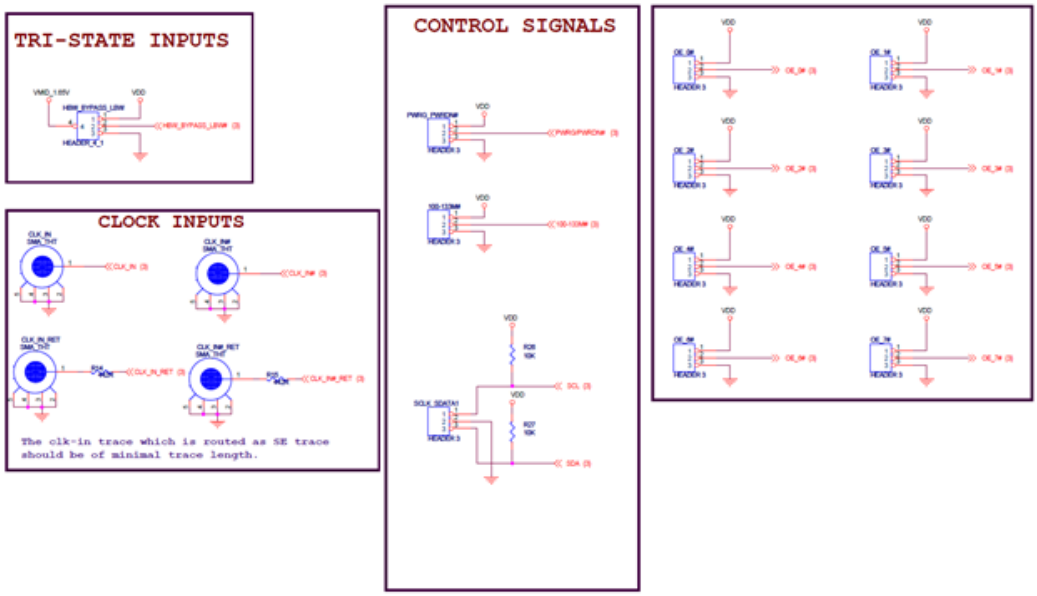

Figure 3. Schematic 3

2. Input and Power Supply Sequencing

The Si53108-A01AGM should be powered up with supply at both the VDD and VDD_IO nodes (at the jumpers available on the EVB). A 100MHz or 133MHz HCSL input clock should be applied to pins 8 and 9. There is no internal or on-board resistive termination, therefore HCSL termination needs to be provided at the input if needed by the driver. The input clock should be applied only after the supplies are stable.

3. Quick Start Guide:

1. Enable supply on the VDD pin.
2. Enable supply on the VDDIO pin.
3. Apply input clock on the SMA connectors CLK_IN/CLK_IN# and measure the return path clock on CLK_IN_RET, CLK_IN#_RET.

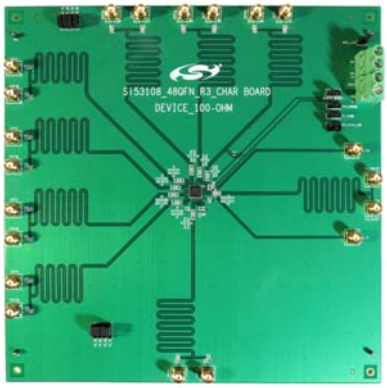

Figure 4. Clock Return Path

   a. The input clock measured at J32, J33 needs a 50-ohm termination on the scope.
   b. The attenuation will be 1:10 after the above termination. Appropriate scaling (10x) needs to be set at the scope to adjust for the scaling.
4. The output clocks are now set up and can be measured on an oscilloscope or frequency domain measurement instrument.

4. Usage of the EVB

1. Once the EVB has been set up, the following can be evaluated:
2. Signal integrity of the device when driving 10-inch, 100-ohm differential traces.
3. Effect of capacitance load on output signal integrity.
4. Output-to-output skew over 10-inch traces.
5. Input-to-output prorogation delay in BYPASS, HBW, and LBW modes using the input clock return path.
6. Measuring the power consumption of the device.
7. Modification of the device settings via the I^2C interface.

5. Bill of Materials

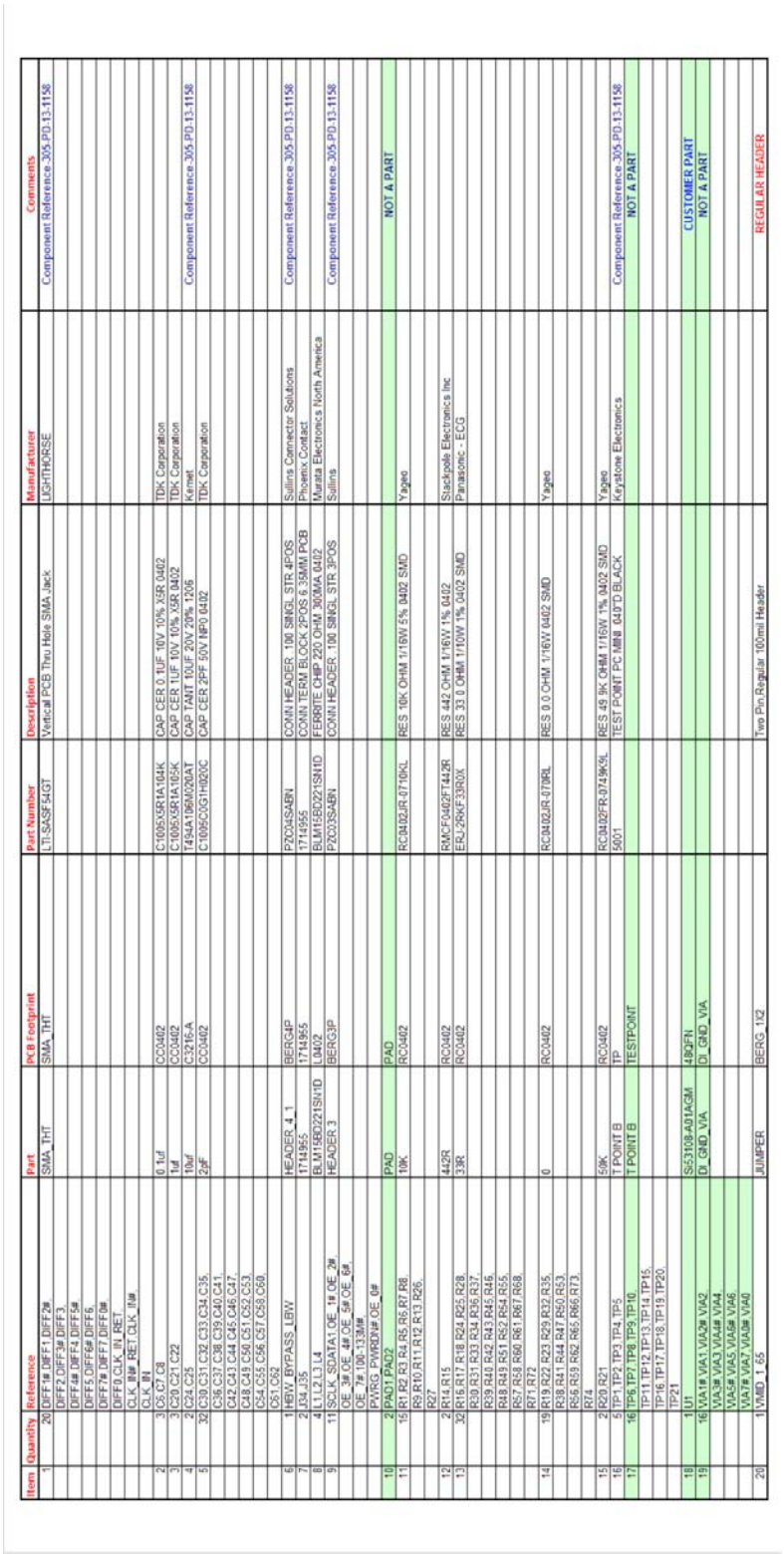

Item	Quantity	Reference	Part	PCB Footprint	Part Number	Description	Manufacturer	Comments
1	20	DIFF1#,DIFF1,DIFF2#,DIFF2,DIFF3#,DIFF3,DIFF4#,DIFF4,DIFF5#,DIFF5,DIFF6#,DIFF6,DIFF7#,DIFF7,DIFF8#,DIFF8,DIFF9,CLK_IN,RET,CLK_IN#,RET,CLK_IN1#,CLK_IN1	SMA_THT	SMA_THT	LTI-SASF54GT	Vertical PCB Thru Hole SMA Jack	LIGHTHORSE	Component Reference 305.P0.13.1158
2	3	C5,C7,C8	0.1uf	CC0402	C1005X5R1A104K	CAP CER 0.1UF 10V 10% X5R 0402	TDK Corporation	
3	3	C20,C21,C22	1uf	CC0402	C1005X5R1A105K	CAP CER 1UF 10V 10% X5R 0402	TDK Corporation	
4	2	C24,C25	10uf	C3216-A	T494A106M020AT	CAP TANT 10UF 20V 20% 1206	Kemet	Component Reference 305.P0.13.1158
5	32	C29,C31,C32,C33,C34,C35,C36,C37,C38,C39,C40,C41,C42,C43,C44,C45,C46,C47,C48,C49,C56,C51,C52,C53,C54,C55,C56,C57,C58,C60,C61,C62	2pF	CC0402	C1005C0G1H020C	CAP CER 2PF 50V NP0 0402	TDK Corporation	Component Reference 305.P0.13.1158
6	1	H6V_BYPASS_LBW	HEADER_4_1	BERG4P	PZC04SABN	CONN HEADER .100 SNGL STR 4POS	Sullins Connector Solutions	Component Reference 305.P0.13.1158
7	2	J04_05	1714965	1714965	1714965	CONN TERM BLOCK 2POS 6.35MM PCB	Phoenix Contact	
8	4	L11,2,13,14	BLM15BD221SN1D	L0402	BLM15BD221SN1D	FERRITE CHIP 220 OHM 300MA 0402	Murata Electronics North America	
9	11	SCL_K,SDATA1,OE_1#,OE_2#,OE_3#,OE_4#,OE_5#,OE_6#,OE_7#,OE_8#,PWRG_PWRD1#,OE_1#	HEADER_3	BERG3P	PZC03SABN	CONN HEADER .100 SNGL STR 3POS	Sullins	Component Reference 305.P0.13.1158
10	2	P4031,PAD2	PAD	PAD				NOT A PART
11	15	R1,R2,R3,R4,R5,R6,R7,R8,R9,R10,R11,R12,R13,R26,R27	10K	RC0402	RC0402JR-0710KL	RES 10K OHM 1/16W 5% 0402 SMD	Yageo	
12	2	R14,R15	442R	RC0402	RMCF0402FT442R	RES 442 OHM 1/16W 1% 0402	Stackpole Electronics Inc	
13	32	R16,R17,R18,R24,R25,R28,R29,R30,R31,R33,R34,R36,R37,R39,R40,R42,R43,R45,R46,R48,R49,R51,R52,R54,R55,R57,R58,R60,R61,R67,R68,R71,R72	33R	RC0402	ERJ-2RKF33R0X	RES 33.0 OHM 1/10W 1% 0402 SMD	Panasonic - ECG	
14	19	R19,R22,R23,R29,R32,R35,R38,R41,R44,R47,R50,R53,R56,R59,R62,R65,R66,R73,R74	0	RC0402	RC0402JR-070RL	RES 0.0 OHM 1/16W 0402 SMD	Yageo	
15	2	R20,R21	50K	RC0402	RC0402FR-07549K9L	RES 49.9K OHM 1/16W 1% 0402 SMD	Yageo	
16	5	TP1,TP2,TP3,TP4,TP5	T POINT B	TP	5001	TEST POINT PC MINI .040"D BLACK	Keystone Electronics	Component Reference 305.P0.13.1158
17	16	TP6,TP7,TP8,TP9,TP10,TP11,TP12,TP13,TP14,TP15,TP16,TP17,TP18,TP19,TP20,TP21	T POINT B	TESTPOINT				NOT A PART
18	1	U1	Si53108-A01AGM	48QFN				CUSTOMER PART
19	16	VIA1#,VIA1,VIA2#,VIA2,VIA3#,VIA3,VIA4#,VIA4,VIA5#,VIA5,VIA6#,VIA6,VIA7#,VIA7,VIA8#,VIA8	DI_GND_VIA	DI_GND_VIA				NOT A PART
20	1	VMID_1_65	JUMPER	BERG_1X2		Two Pin Regular 100mil Header		REGULAR HEADER



ClockBuilder Pro

One-click access to Timing tools, documentation, software, source code libraries & more. Available for Windows and iOS (CBGo only).

www.silabs.com/CBPro

Timing Portfolio
www.silabs.com/timing

SW/HW
www.silabs.com/CBPro

Quality
www.silabs.com/quality

Support and Community
community.silabs.com

Disclaimer
Silicon Laboratories intends to provide customers with the latest, accurate, and in-depth documentation of all peripherals and modules available for system and software implementers using or intending to use the Silicon Laboratories products. Characterization data, available modules and peripherals, memory sizes and memory addresses refer to each specific device, and "Typical" parameters provided can and do vary in different applications. Application examples described herein are for illustrative purposes only. Silicon Laboratories reserves the right to make changes without further notice and limitation to product information, specifications, and descriptions herein, and does not give warranties as to the accuracy or completeness of the included information. Silicon Laboratories shall have no liability for the consequences of use of the information supplied herein. This document does not imply or express copyright licenses granted hereunder to design or fabricate any integrated circuits. The products must not be used within any Life Support System without the specific written consent of Silicon Laboratories. A "Life Support System" is any product or system intended to support or sustain life and/or health, which, if it fails, can be reasonably expected to result in significant personal injury or death. Silicon Laboratories products are generally not intended for military applications. Silicon Laboratories products shall under no circumstances be used in weapons of mass destruction including (but not limited to) nuclear, biological or chemical weapons, or missiles capable of delivering such weapons.

Trademark Information
Silicon Laboratories Inc., Silicon Laboratories, Silicon Labs, SiLabs and the Silicon Labs logo, CMEMS®, EFM, EFM32, EFR, Energy Micro, Energy Micro logo and combinations thereof, "the world's most energy friendly microcontrollers", Ember®, EZLink®, EZMac®, EZRadio®, EZRadioPRO®, DSPLL®, ISOmodem ®, Precision32®, ProSLIC®, SiPHY®, USBXpress® and others are trademarks or registered trademarks of Silicon Laboratories Inc. ARM, CORTEX, Cortex-M3 and THUMB are trademarks or registered trademarks of ARM Holdings. Keil is a registered trademark of ARM Limited. All other products or brand names mentioned herein are trademarks of their respective holders.

SILICON LABS

Silicon Laboratories Inc.
400 West Cesar Chavez
Austin, TX 78701
USA

http://www.silabs.com